YARBO

YARBO BACK BRACE MOUNT (BBM)

QUICK START GUIDE

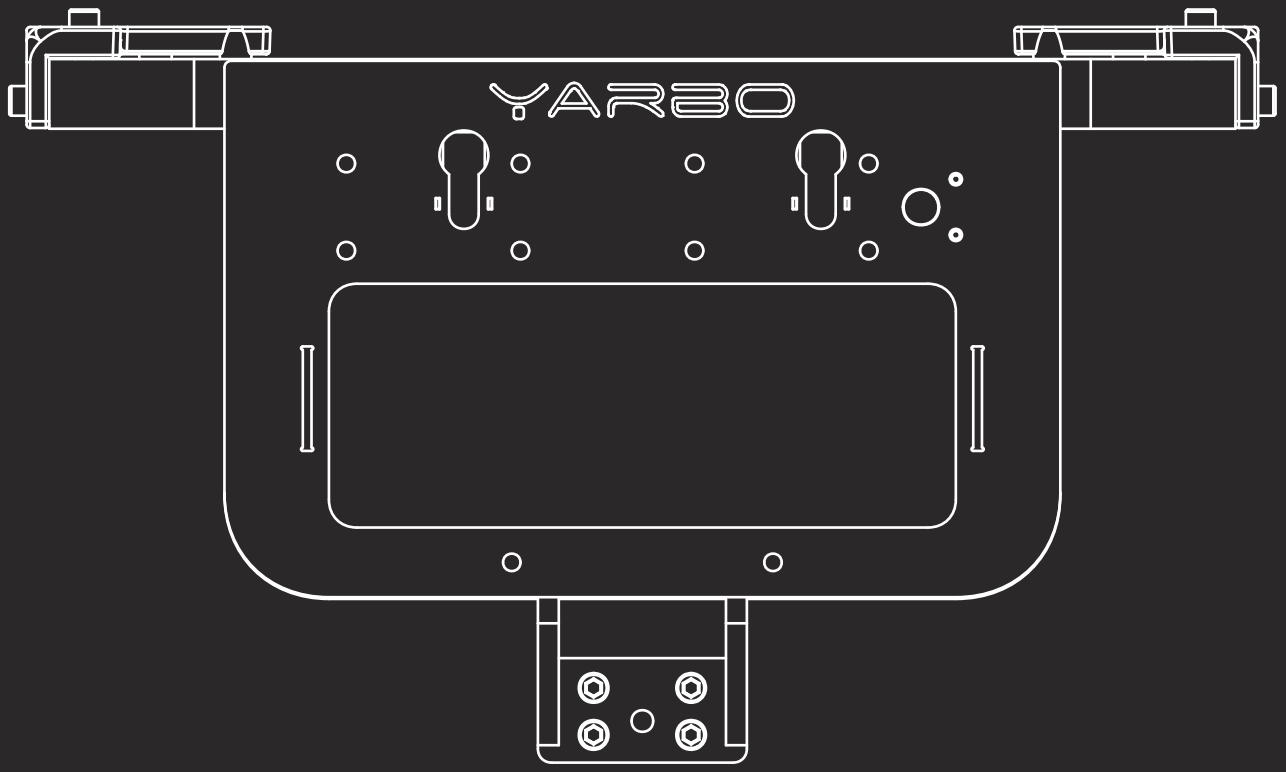

User Manual

Video Assembly Guide

Welcome

Welcome



Thank you for choosing the Yarbo Yard Robot. We are pleased to welcome you to our user community. To help you get the most out of your device while ensuring safe operation, we strongly recommend that you read this quick start guide thoroughly, with particular attention to the sections on correct usage and potential safety hazards.

What's in the Box

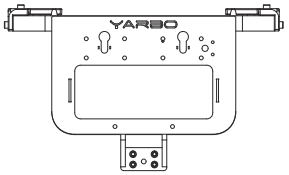

Back Brace Mount (BBM)

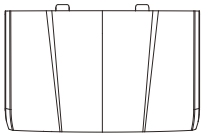

New Battery Compartment Cover

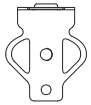

Rear Tow Hitch



X6 (2 spares)

Mounting Screws for Tow Hitch



Battery Cover Wrench



X4

Mounting Screws for BBM



Allen Key #3



Allen Key #4



Yarbo Back Brace Mount (BBM)
Quick Start Guide

Installation Guide

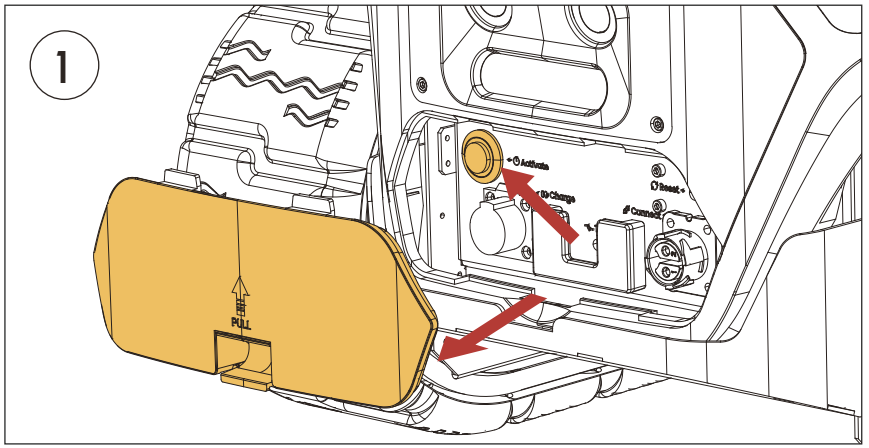

Step 1: Power Off the Device

Before beginning any installation:

- Open the **rear power bay cover** on the Yarbo Core.
- Press and hold the **Activate Button** for 30 seconds to perform a complete shutdown, or turn off the device via the **Safety Settings** in the Yarbo App.

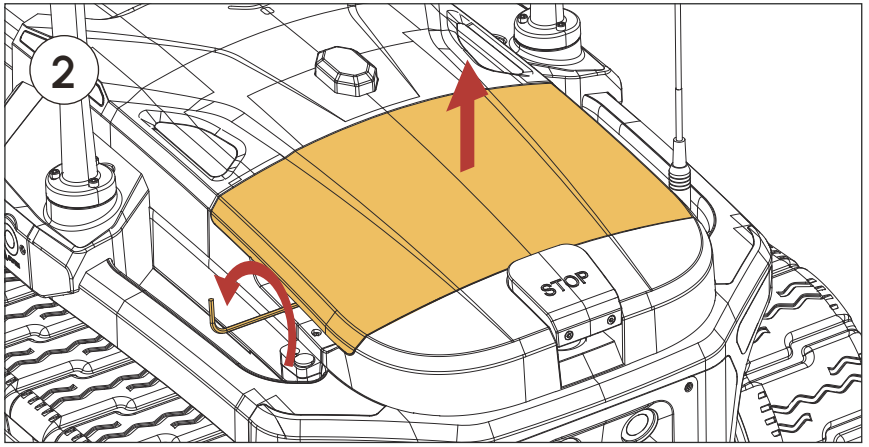

Step 2: Remove the Original Battery Cover

- Use the Battery Cover Wrench to unscrew and remove the anti-theft screws from the existing battery cover.
- Carefully remove the old cover and store it for future use if needed.

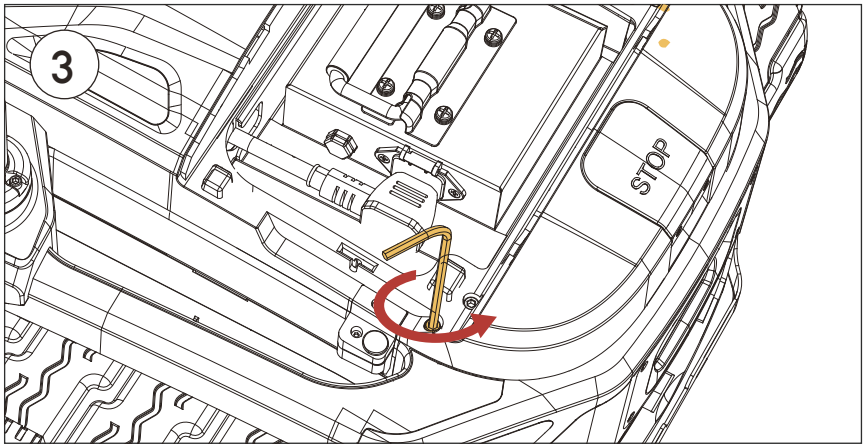

Step 3: Remove the Top Screws from the Battery Bay

- Locate the **4 original screws** at the top of the battery bay.
- Use **Allen Key #3** to remove them. Keep these screws safely aside.

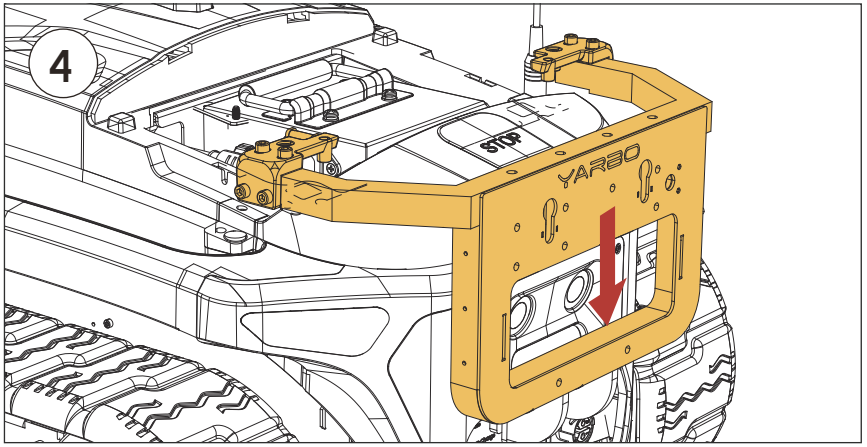

Step 4: Align and Attach the New Back Brace Mount (BBM)

- Take out the new BBM from the box.
- Align the BBM with the **tow hitch mount** on the rear of the Yarbo Core, ensuring the connectors are properly seated.
- Ensure the **top latches** align with the battery compartment for a snug fit.

Installation Guide

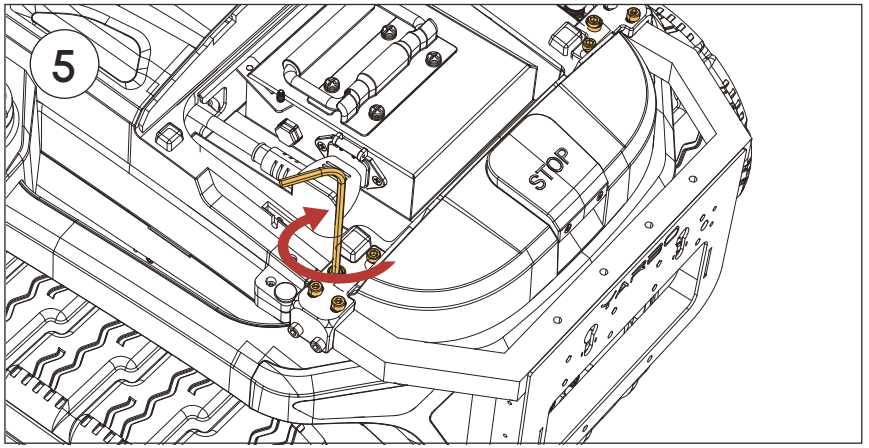

Step 5: Secure the BBM

- Use the **4 new mounting** screws provided in the box.
- Tighten them with Allen Key #3 to firmly secure the BBM onto the Yarbo Core.

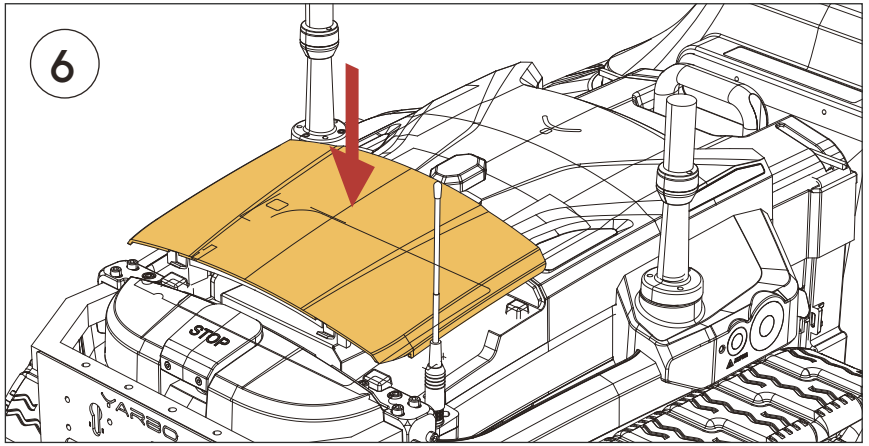

Step 6: Install the New Battery Compartment Cover

- Align and install the **new battery cover** on top of the battery bay.
- Ensure that it fits seamlessly with the new BBM structure.
- Reinstall the anti-theft screws.

Skip this step if installing accessories such as the trimmer. The tow hook cannot be installed with additional accessories simultaneously.

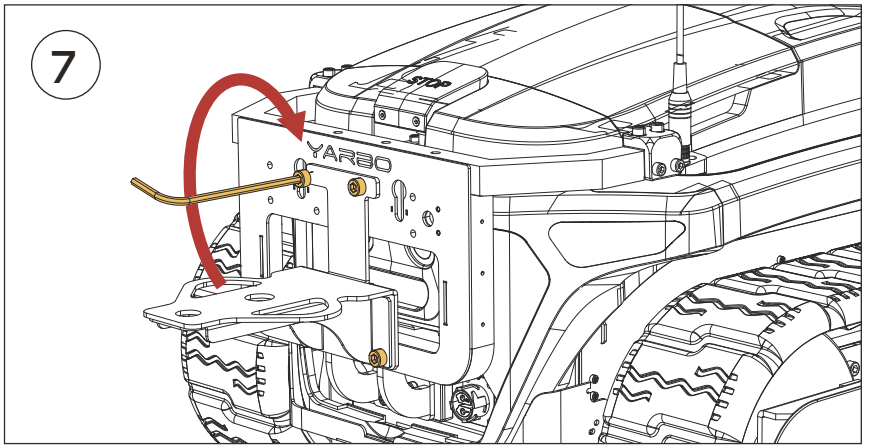

Step 7: Attach the Rear Tow Hook

- Take out the tow hook and align it with the designated notches on the BBM.
- Use Allen Key #4 to tighten the mounting screws and lock the hook firmly in place.

Next Steps

Once the BBM is installed, you can mount other modules (e.g., Trimmer) onto the rear bracket using their corresponding Quick Start Guides.

Installing Yarbo App

The Yarbo App is a professional application that empowers you to manage and control your Yarbo anytime, anywhere, elevating your snow cleaning experience to new heights. With its impressive features, you can easily set up work schedules, define multiple working areas and no-go zones, and monitor Yarbo's operating status. Additionally, you can receive the latest firmware updates and access instruction manuals, video tutorials, FAQs, and more through the App.

Follow these simple steps to install and set up the Yarbo App:

① Download the Yarbo App by scanning the QR code below or searching on the app store.
② After installation, log in to your Yarbo account. If you don't have one, please register.
③ Follow the steps of the first-time user guide on the app. If there are few steps that are hard to understand, please refer to the app section of this user manual.

*Note: Once a device is associated with a Yarbo account, it cannot be linked to a new account. However, you can invite others to use your Yarbo through Yarbo Sharing in the app.

iOS

Available on the App Store

Android

GET IT ON Google Play

YARBO INC.

www.yarbo.com

Refer to Friends
& Get Rewards

Share Your
Yarbo Journey

Join Yarbo
Exclusive Community

+1 (888)550-6809

support@yarbo.com

1951 Ocean Avenue, Unit 3, Ronkonkoma, NY 11779 United States

V 1.4