YARBO

2025

USER MANUAL

YARBO BLOWER

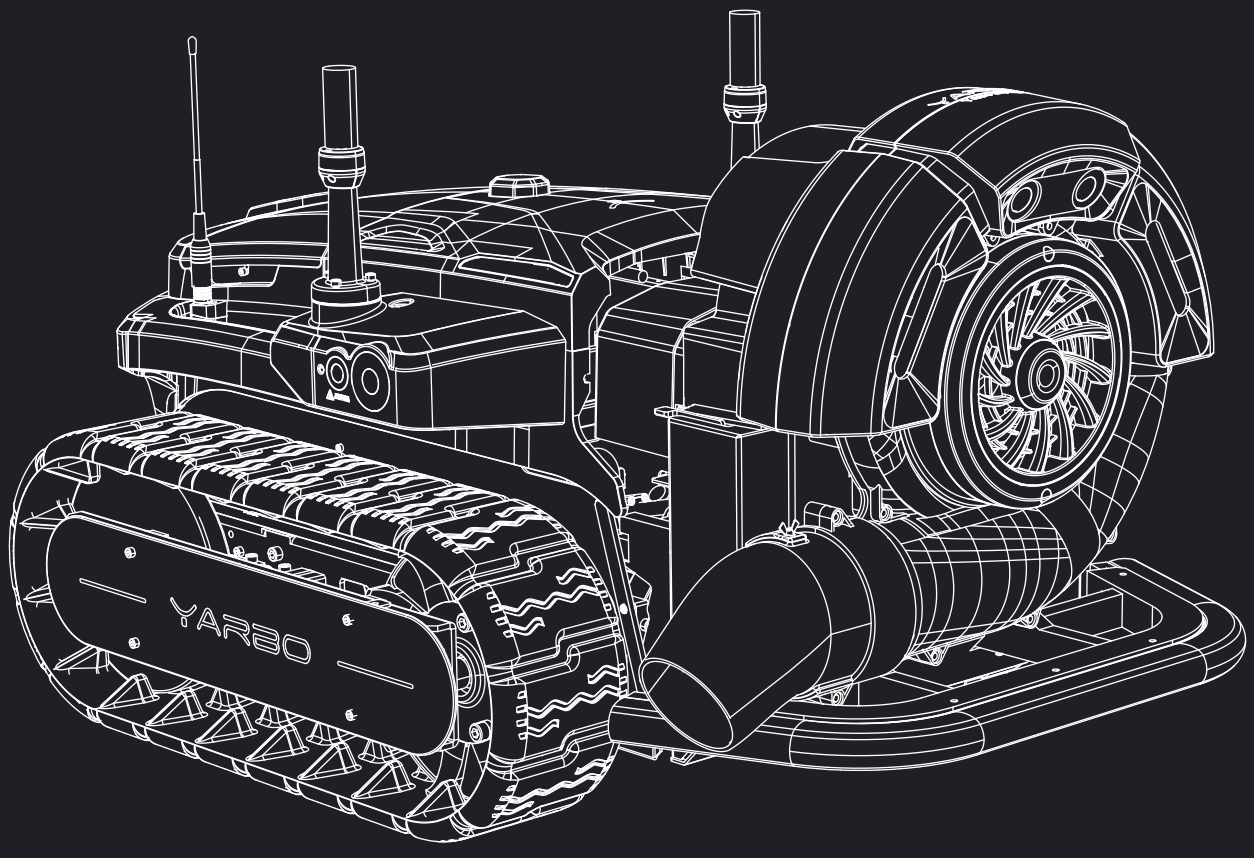

User Manual

Video Assembly Gui

YARBO

Table of Contents

Welcome

Safety

1.1 Pre-Operation Safety Instructions 01
1.2 Operation Safety Instructions 02
1.3 After-Operation Safety Instructions 02

Box Content Introduction

2.1 Blower Module Box 03
2.2 Product Overview 04

Installation Guide

3.1 Assemblin Blower 05
3.2 Installing Yarbo App 11

Yarbo APP Features

4.1 Features Statement 12

Table of Contents

Physical Controller Instruction

5.1 Button Introduction 15
5.2 Connecting Yarbo Controller 18
5.3 Yarbo Controller Holder Installation Guide 19
5.4 LED Indicator Description 21

Maintenance Guide

6.1 Before Conducting Any Maintenance 23
6.2 Cleaning Yarbo Core 24
6.3 Applying Grease on the Tracks 25
6.4 Updating Firmware 26
6.5 Keeping Battery at Its Best Performance 26

Specification

7 Yarbo Blower Module 27

Limited Warranty

8.1 Residential Warrant Coverage 28
8.2 General Statement 30
8.3 Warranty Forfeiture 31

Table of Contents

Welcome



Thank you for choosing the Yarbo Yard Robot. We are pleased to welcome you to our user community. To help you get the most out of your device while ensuring safe operation, we strongly recommend that you read this user manual thoroughly, with particular attention to the sections on correct usage and potential safety hazards.

1. Safety

⚠ MUST READ

Failure to follow safety instructions may result in serious injury or property damage. Yarbo disclaims any liability for consequences arising from improper use or failure to follow these instructions.

⚠ 1.1 Pre-operation Safety Instructions

Ensure the area is free of obstacles that may cause damage to the product.

Verify that the product is functioning correctly before use.

Do not use the product if any parts are broken or malfunctioning.

Do not allow children or pets to access the controller (physical or mobile app).

Ensure the product is assembled and operated according to the user manual. The operator must read and fully understand the manual before use.

Clean the cameras before use, if needed. Use only non-corrosive cleaners and soft materials. Take extra care, as the cameras may become hot and cause burns due to the heating film.

⚠ 1.2 Operation Safety Instructions

Always maintain a safe distance when using the controller or during automatic operation. Never place any part of your body near or under the Yarbo system, especially when it is turning or climbing slopes.

Do not allow children, individuals with physical, sensory, or mental limitations, or those lacking experience or knowledge to operate Yarbo. Please note that local regulations may impose age restrictions on the operator.

A trained and authorized individual must supervise untrained persons whenever Yarbo is in operation.

Do not operate Yarbo if the operator is under the influence of alcohol, drugs, or illness.

Do not throw objects toward the product or surrounding vehicles and buildings, as this may damage the auger or impeller of the active module.

If Yarbo is operating in public spaces, clearly display warning signs around the work area. Examples include:

h h ¨ q h Ø – h l) h) » q h D » » h) / h ˙ Ø h ¸ » h Ø – ¸ » q h l » (» h

h h ¨ q h Ø – h G) h L) » q h D » » h) / h ˙ Ø h ¸ » h Ø – ¸ » q h l » (» h

h h ¨ q h Ø – h) » q h D » » h) / h ˙ Ø h ¸ » h Ø – ¸ » q h l » (» h – ¸ •

Do not operate Yarbo near fires, hot ashes, or heat sources to prevent fire hazards.

1. Safety

Ensure Yarbo is powered off before clearing blockages, performing maintenance, or conducting inspections. If abnormal vibrations occur, stop operation immediately, press the emergency stop button, and inspect the device for damage. If the vibration continues, remove the battery and check for potential faults.

Never step or sit on Yarbo at any time.

Only use the provided docking station to charge Yarbo. To avoid electric shock, overheating, or battery leakage, do not touch any part of the charging station during charging.

Caution: Slippery Surfaces — Areas where snow has been cleared may remain slippery. Pedestrians and vehicles should proceed with caution to avoid accidents.

h • h h . » Ø » h » ¸ » h ~ h 5 h » . » Ø » h – • h » l ¨ l m h ¸ » (/ h) ˙ h performance may be affected. Adjust your operation strategy accordingly for optimal and safe use.

⚠ 1.3 After-operation Safety Instructions

Always wear gloves and follow the recommended maintenance procedures. Shut down Yarbo and remove the battery before performing any maintenance, inspections, or clearing blockages in the discharge chute.

Disconnect the battery from the core if Yarbo will not be used for an extended period.

Regular Maintenance: Regularly inspect the blades, battery, motor, and other parts to ensure proper function and minimize the risk of malfunction.

⚠ Disclaimer

This safety guide is provided for general informational purposes. The operator is solely responsible for ensuring compliance with local laws, regulations, and safety standards. Yarbo disclaims all liability for injuries, damages, or losses arising from improper use, failure to follow these instructions, or failure to comply with applicable local laws and regulations.

2. Box Content Introduction

2.1 Blower Module Box

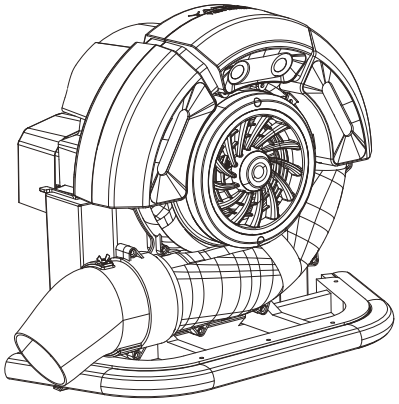

Blower Module

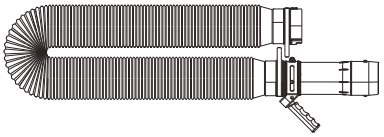

Handheld Flexible Blower Tube

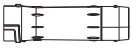

Connecting Tube



Blower Tapered Nozzle



Yarbo Blower
User Manual



x2

Y-shaped Thumb
Screw Bolts



x2

Rubber Blower Nozzle
Screws



x2

T-Shaped Thumb
Screw Bolts

2. Box Content Introduction

2.2 Product Overview

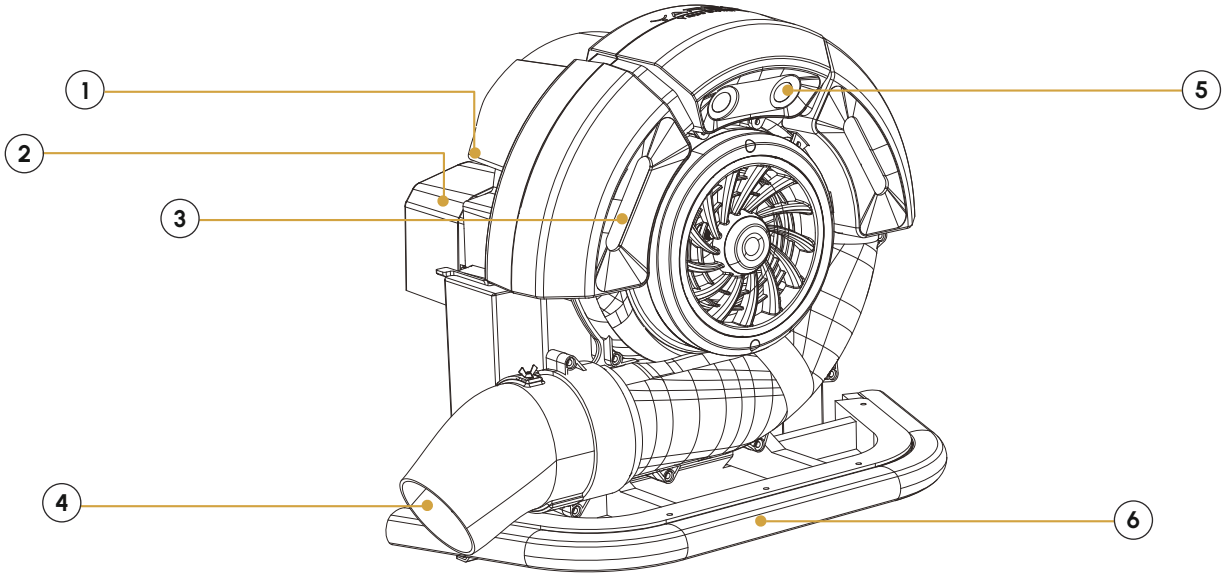

① Lifting Handle
② Rubber Cover for Module Connection
③ Front Light
④ Nozzle
⑤ Front Binocular Camera
⑥ Bumper

3. Installation Guide

3.1 Assemblin Blower

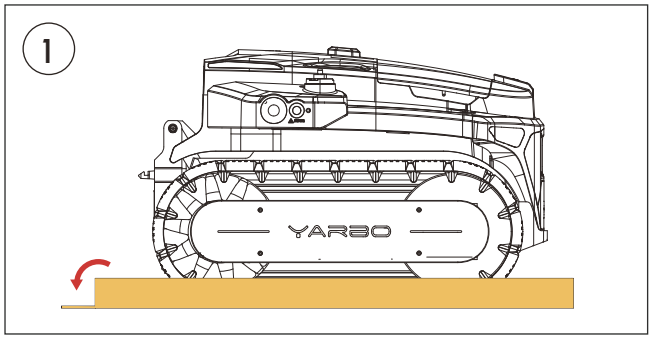

Cut the box along the cutting line on the bottom of the packaging box.

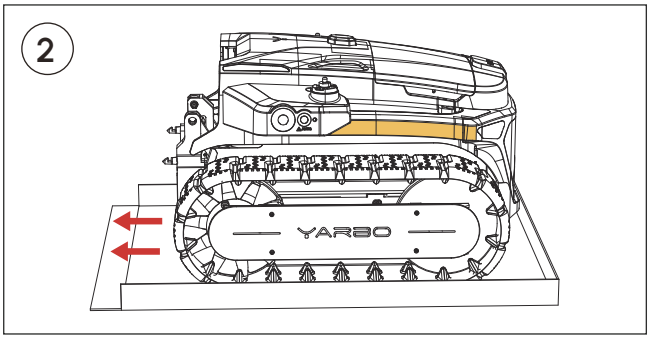

Grasp the lifting handles of the Yarbo Core and **push** the Yarbo Core out from the packaging box.

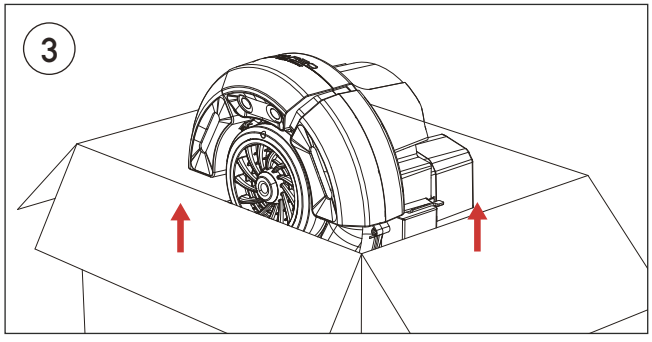

Carefully **lift** the Blower Module out of the packaging box by grasping the lifting handle at the two sides of the module.

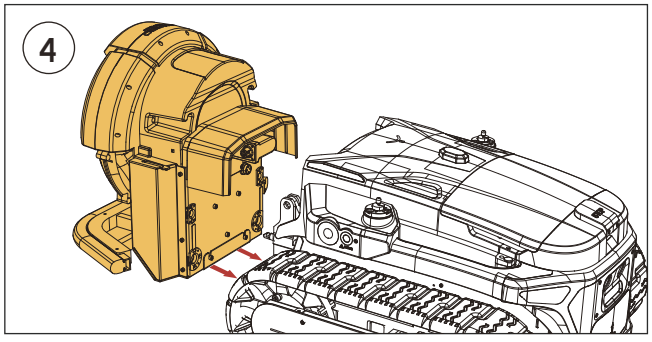

Pull the Blower Module close to the Yarbo Core by **grasping** the lifting holder on both sides, ensuring that the two parts are positioned closely enough to connect the cable.

3. Installation Guide

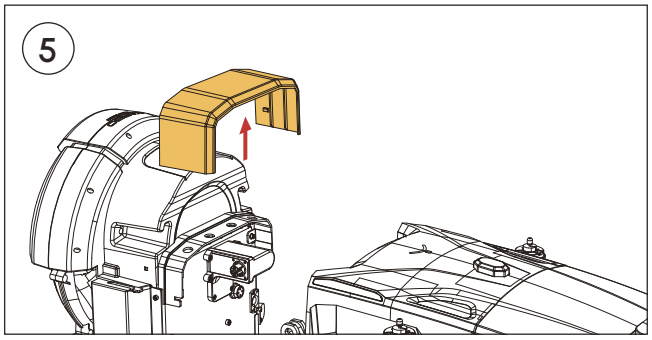

Remove the Rubber Connection Cover on the connection part of Blower.

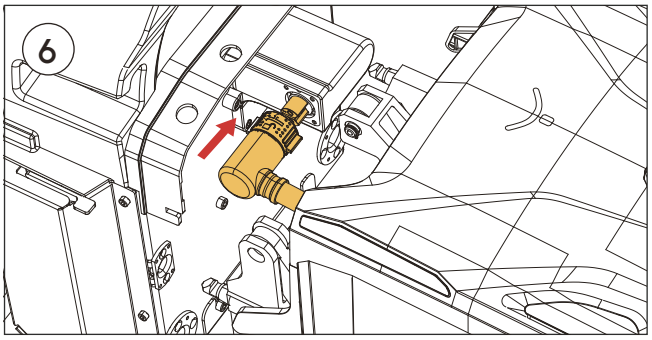

Locate the connection cable from the Yarbo Core. Carefully **insert** the cable into the port located on the Blower Module, ensuring that it is properly aligned and securely connected.

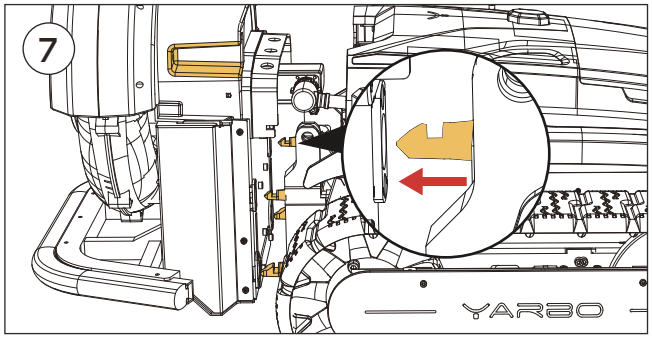

Locate the shafts and holes in the Yarbo Core and Blower Module and align the two parts.

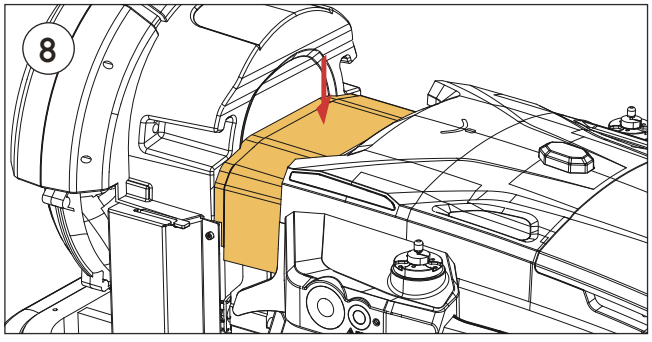

Locate the Rubber Connection Cover provided and **intall** it onto the connection part of Blower Module.

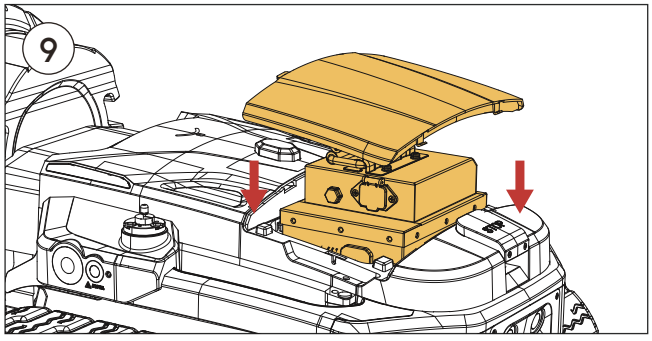

Open the battery cover and **place** the battery into the battery cabin.

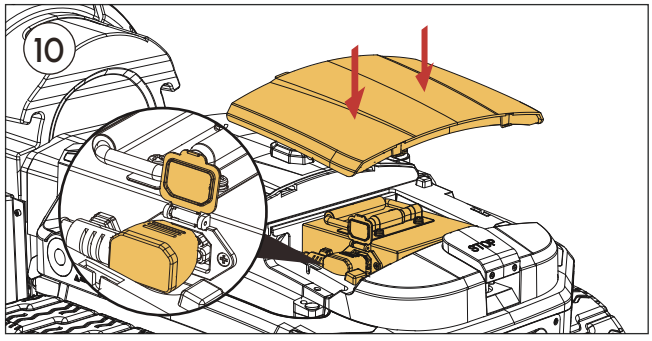

Open the port lid and insert the power connection cable into the battery port. Place back the battery cover.

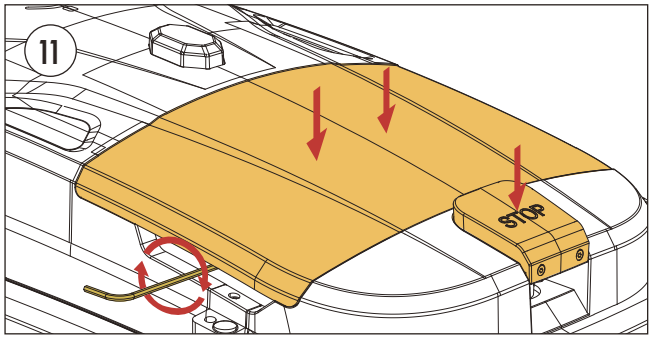

Screw the anti-theft bolts battery cover on both sides with Battery Cover Wrench provided in the package.
Press the Emergency Stop Button.

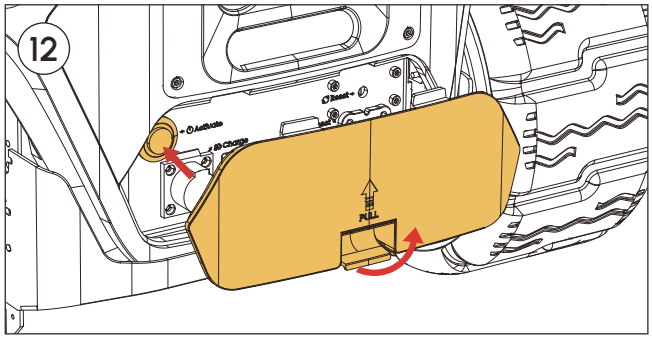

Remove the rear cover. **Press** the Activate Button to turn on Yarbo. Place back the rear cover.

3.1.1 Switching to Handheld Flexible Blower Tube (optional)

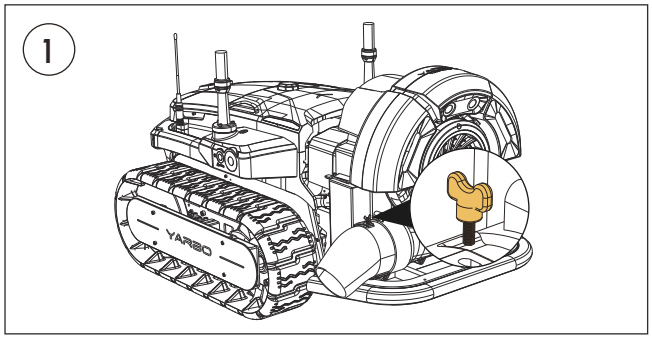

Unscrew the Y-shaped Thumb Screw Bolt by hand and safely **preserve** the bolt.

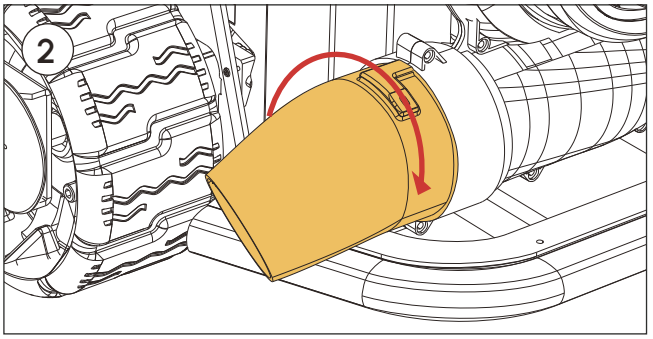

Rotate the Rubber Blower Nozzle and **align** the yellow arrow with the L-shaped section.

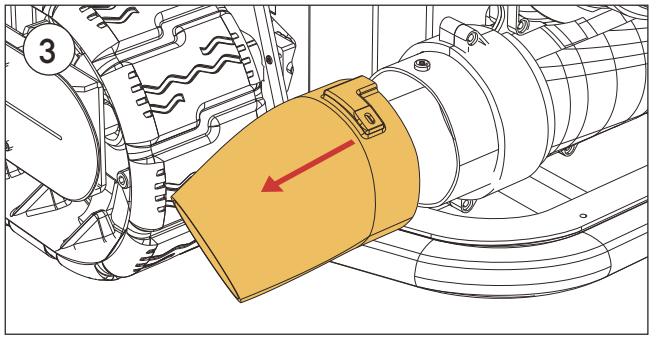

Remove the Rubber Blower Nozzle.

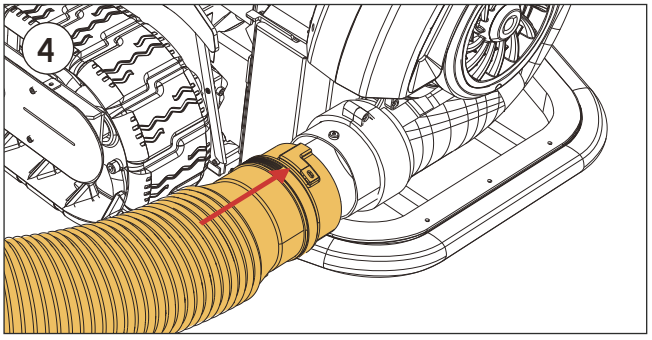

Locate the Handheld Flexible Blower Tube in the package. **Align** the yellow arrow on the machine end of the Handheld Flexible Blower Tube with the hole. **Push** the Tube into place.

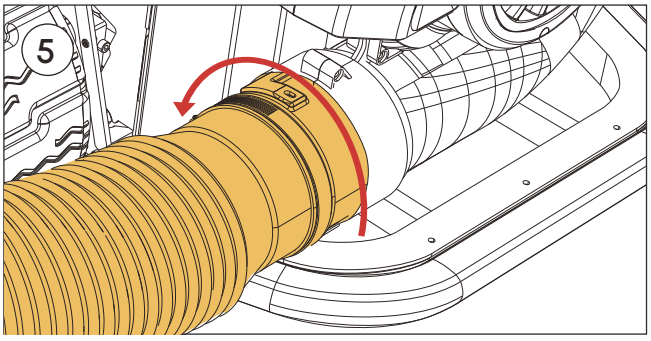

Rotate the Handheld Flexible Blower Tube until the two holes are aligned.

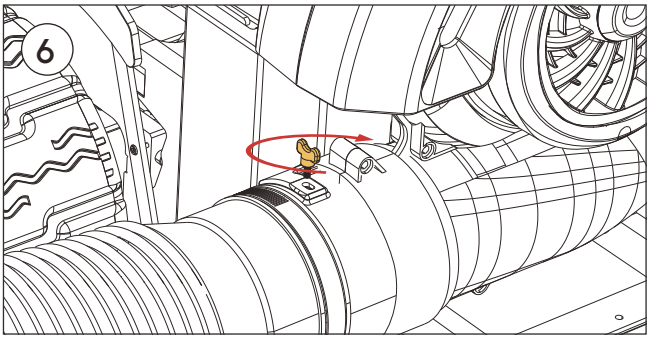

Locate the Y-shaped Thumb Screw Bolt. Screw the bolt by hand.

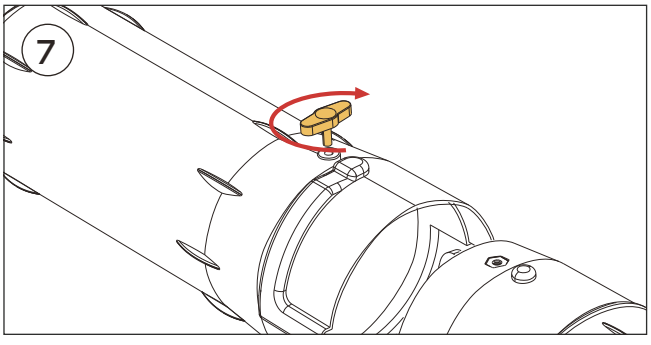

Locate the Connecting Tube in the package. **Unscrew** the T-Shaped Thumb Screw Bolt and safely **preserve** the bolt

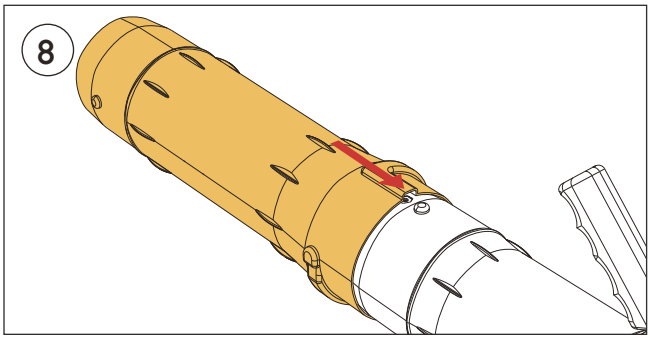

Align the yellow arrow on the control end of the Handheld Flexible Blower Tube with the L-shaped section on the Connecting Tube. **Push** the Connecting Tube into place.

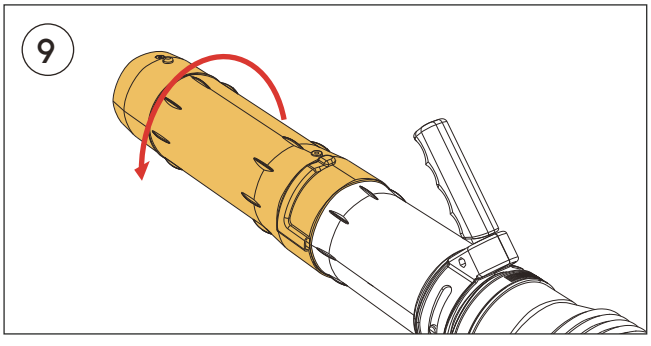

Rotate the Connecting Tube until the two yellow arrows are aligned.

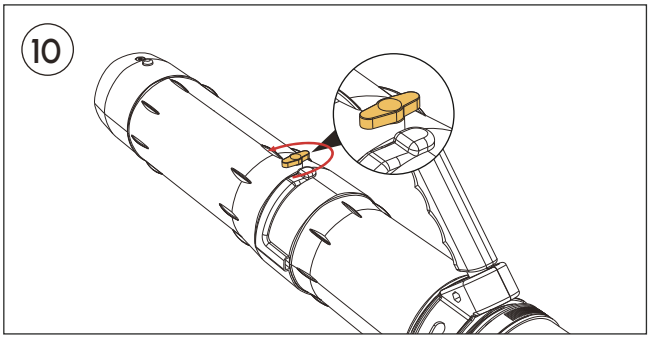

Locate the T-Shaped Thumb Screw Bolts and **screw** it.

3. Installation Guide

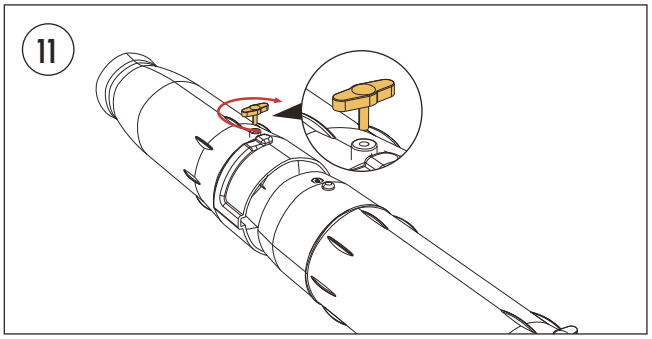

Locate the Blower Tapered Nozzle in the package. **Unscrew** the T-Shaped Thumb Screw Bolt and safely **preserve** the bolt.

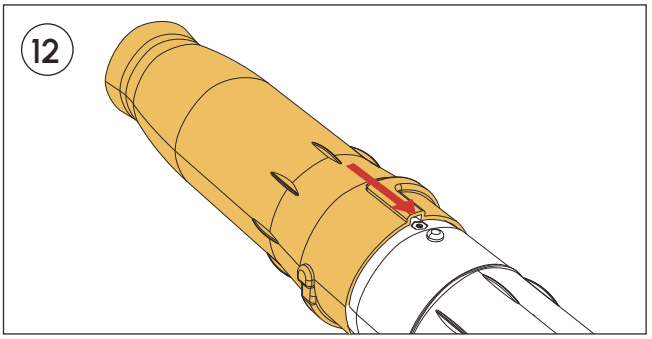

Align the yellow arrow on the Connecting Tube with the L-shaped section on the Blower Tapered Nozzle. **Push** the Blower Tapered Nozzle into place.

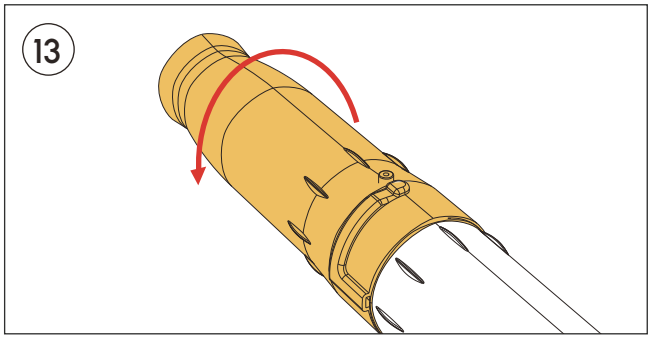

Rotate the Blower Tapered Nozzle until the two yellow arrows are aligned.

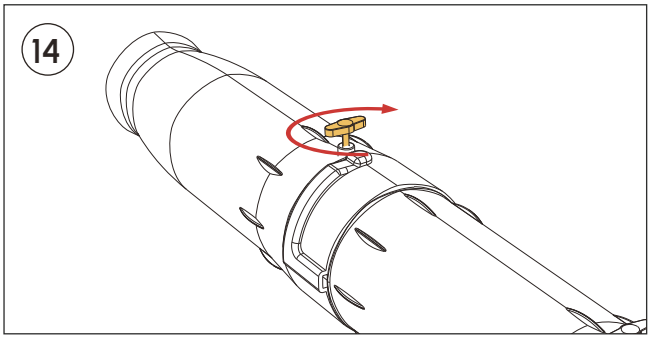

Locate the T-shaped Thumb Screw Bolt and **screw** it.

NOTICE

- This appliance can be used by children aged from 8 years and above and persons with reduced physical,sensory or mental capabilities or lack of experience and knowledge if they have been given supervision or instruction concerning use of the appliance in a safe way and understand the hazards involved
- Children shall not play with the appliance
- Cleaning and user maintenance shall not be made by children without supervision

WARNING

- For the purposes of recharging the battery, only use the detachable supply unit provided with this appliance

3.2 Installing Yarbo App

The Yarbo App is a professional application that empowers you to manage and control your Yarbo anytime, anywhere, elevating your leaf blowing cleaning experience to new heights. With its impressive features, you can easily set up work schedules, define multiple working areas and no-go zones, and monitor Yarbo's operating status. Additionally, you can receive the latest firmware updates and access instruction manuals, video tutorials, FAQs, and more through the App.

Follow these simple steps to install and set up the Yarbo App:

① Download the Yarbo App by scanning the QR code below or searching on the app store.
② After installation, log in to your Yarbo account. If you don't have one, please register.
③ Follow the steps of the first-time user guide on the app. If there are few steps that are hard to understand, please refer to the app section of this user manual.

*Note: Once a device is associated with a Yarbo account, it cannot be linked to a new account. However, you can invite others to use your Yarbo through Yarbo Sharing in the app.

iOS

Available on the App Store

Android

GET IT ON Google Play

APP Tutorial

4. Yarbo APP Features

Before using the Yarbo App, we recommend taking a few moments to read through this user manual. The app plays a key role in operating your Yarbo device, so understanding its features and how it works is essential for a smooth experience. If you haven't downloaded the app yet, please refer to Section 3.2.

4.1 Features Statement

1.Mapping

The mapping function is tailored for users to create a detailed map of the area where Yarbo to operate. Normally, A map encompass the docking station, pathways, woking areas, no-go zones. With the map, Yarbo can design its route through intelligent algorithm and execute the work plan depending on the personal schedule. The provided picture serves as an example of the map, showing two designated working areas, one No-go Zone, two Pathways and a docking station.

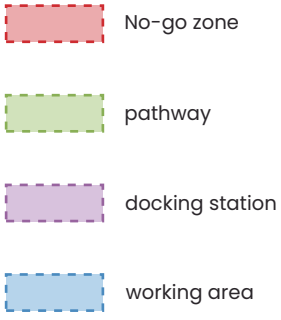

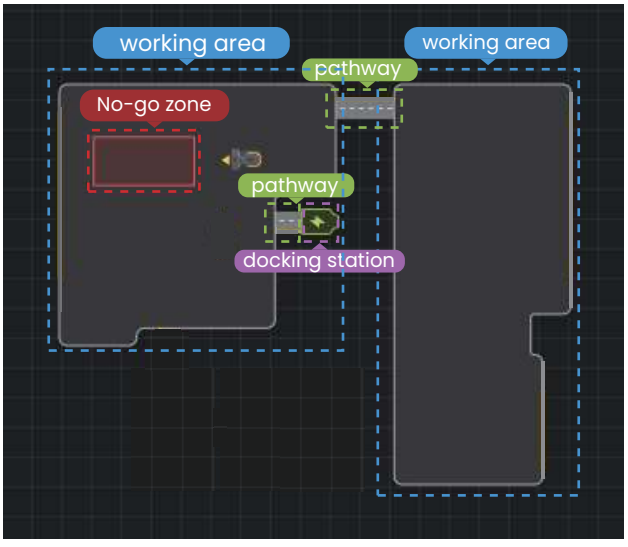

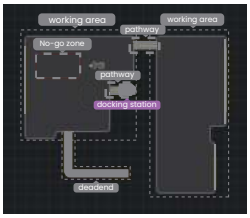

① Docking Station serves two purposes:

1. Charging Station – Marked by a green battery icon on the map.
2. Work Plan Starting Point – The designated location where Yarbo begins its tasks. If you need to move the docking station, update its position on the map by clicking "Reinstall Docking Station" on the Yarbo Settings page.

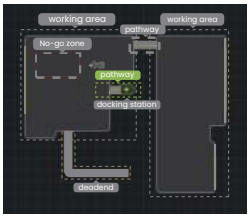

② Pathway:

A pathway is designed to be a narrow lane that connects the two elements. A pathway can connect the docking station and the working area. At the same time, it can also connect two working areas shown in the map.

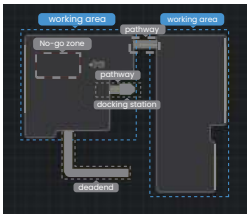

③ Working Area:

The working area refers to an enclosed zone where Yarbo performs operations. While the entire map requires at least one working area connected to the docking station, additional working areas may be added and connected via pathways. To define a working area, simply drive Yarbo along the desired perimeter - the system will automatically recognize the boundary and handle all navigation routing. Each working area must maintain a fully enclosed boundary for proper operation.

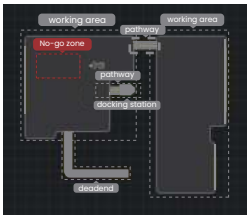

④ No-go Zone:

The "No-go zone" refers to enclosed areas withinthe working area where you do not want Yarbo to enter. Typically, these areas include the swimming pool, flowerbeds, restricted areas, and large obstacles that may obstruct Yarbo's normal operation. Although Yarbo M1 can detect and avoid obstacles, drawing the no-go zone in Advancement can save time during operating.

2.Work Plan

The Work Plan feature is designed to help users create mowing tasks. Each work plan can be customized by choosing one or more elements on the map. In other words users can create different work plans that include different elements on the same map. The purpose of creating different work plans is to ensure that different elements can have different working schedules.



5. Physical Controller Instruction

Physical controller is an alternative method for controlling Yarbo. This section aims to provide basic instructions for operating the Yarbo using the physical controller.

5.1 Button Introduction:

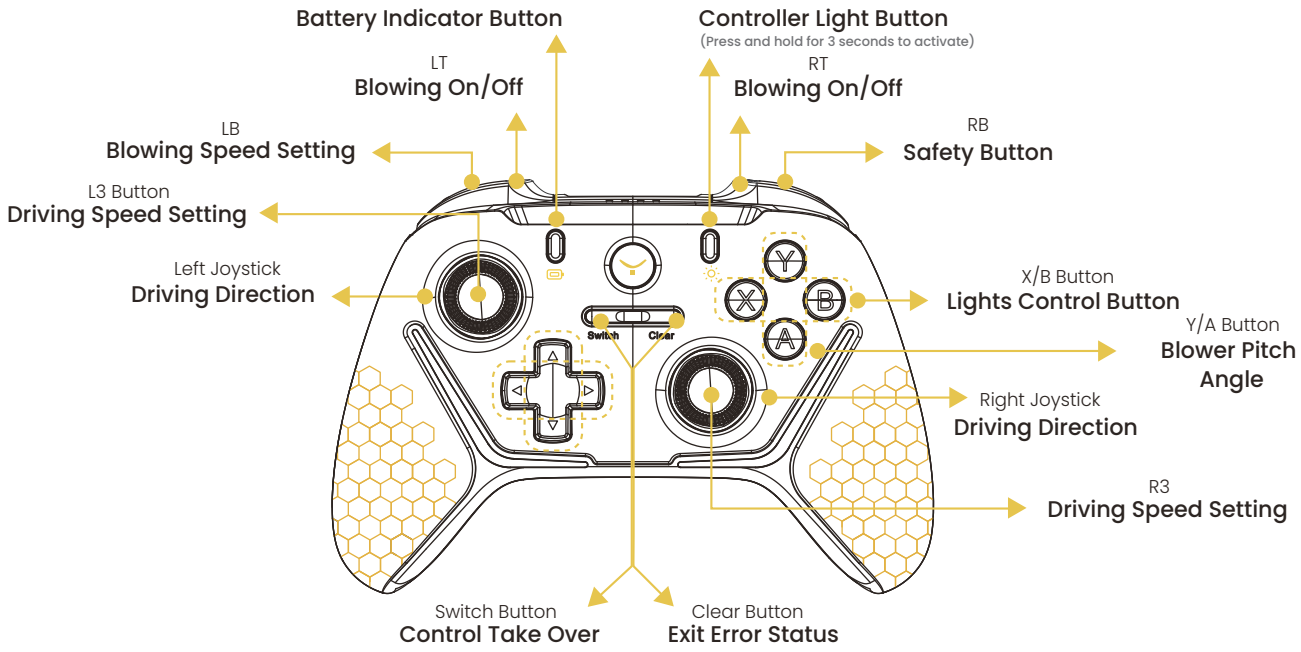

⚠ WARNING

- DO NOT operate Yarbo when the controller is exposed to an ambient temperature higher than 45 ¥ or lower than -25 ¥.

5. Physical Controller Instruction

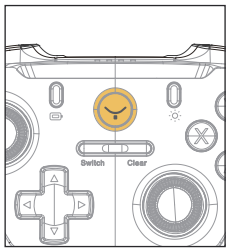

Yarbo Logo Button:

Logo button can be used to power on or off the controller. To power on the controller, short press the **Logo button for 1 second**. To power off, press the **Logo buttons for 3 seconds**. If the controller is not in use, it will automatically power off after 5 minutes.

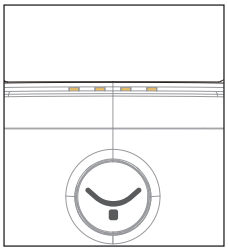

Battery Level

Press the Battery Indicator Button (refer to the picture on the next page) to check the battery level of the controller. The four LED lights on the top of the controller indicate the battery status.

▬▭▭▭	Light 1 stays on indicates battery level is 1%-25%.
▬▬▭▭	Lights 1 and 2 stay on indicates battery level is 26%-50%.
▬▬▬▭	Lights 1, 2, and 3 stay on indicates battery level is 51%-75%.
▬▬▬▬	All lights (1, 2, 3, and 4) stay on indicates handle battery level is 76%-100%.

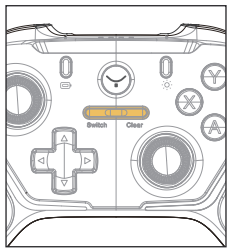

Switch & Clear Button:

Long press the switch button for seconds to take over the control authority. Once the physical controller gains authority, the users can operate the Blower module.

Short press the switch or clear button to exit the error mode. When Yarbo encounters the dangers or stuck by any obstacles, it will stop and enters the error mode. After the dangers are cleared, pressed the start or clear button to exit the erorr mode.

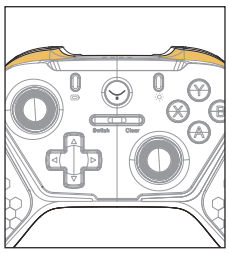

LB & RB (Safety button):

LB & RB are designed as safety button, which means that one of the buttons shoule be pressed throughout most of the operation that may cause dangerous result. Except for the X/A/B/Y buttons and D-pads, the rest of the function buttons must be pressed with the safety button to execute their own functions.



Left Joystick and Right Joystick:

These two joysticks control the direction of movement and speed of the robot.Press the safety button LB and rotate the stick around to control Yarbo's movement in any direction. Press the left and right stick vertically down to switch between two-speed settings (L3, R3 button).

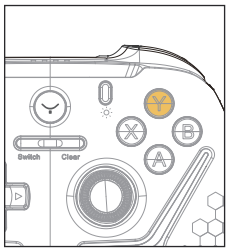

Y Button:

This button controls the Blower module to pitch up. Press and hold the button to continuously pitch up the Blower module until it reaches the highest position. Release the button to stop at the current angle.

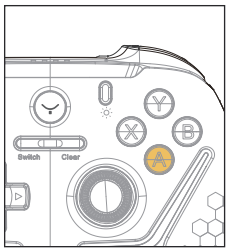

A Button:

This button controls the Blower module to pitch down. Press and hold the button to continuously pitch down the Blower Module until it reaches the lowest position. Release the button to stop at the current angle.

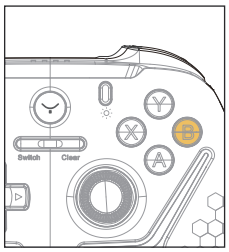

B Button:

Press this button to turn on and off the front lights (default setting is on).

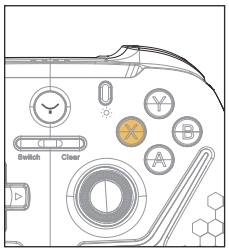

X Button:

Press this button to turn on and off all the lights(default setting is on).

5.2 Connecting Yarbo Controller

5.2.1 Connecting physical controller to Yarbo

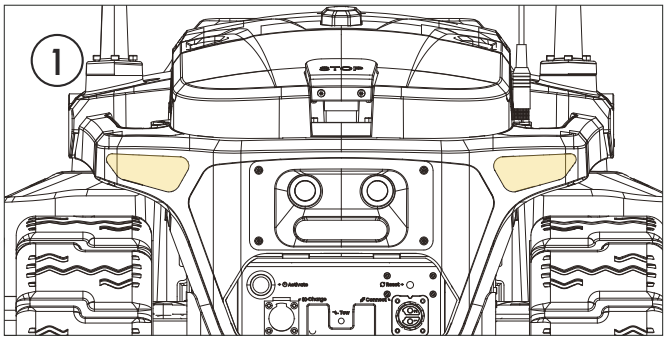

Before proceeding, ensure that Yarbo is powered on. A solid white light on the Yarbo (as shown in the figure above) indicates that Yarbo is powered on and ready for the controller setup.

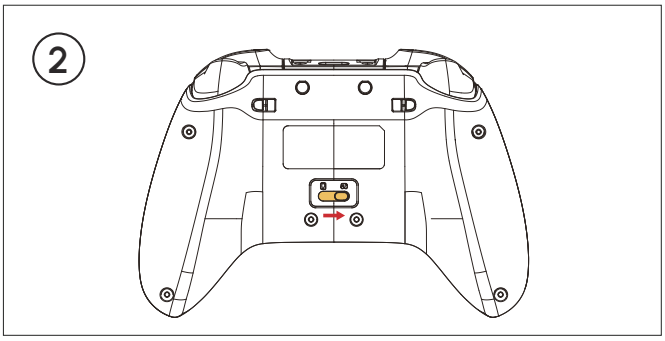

Make sure the slide switch is slid to the right side.



Short-press the Yarbo Logo Button to power on the physical controller

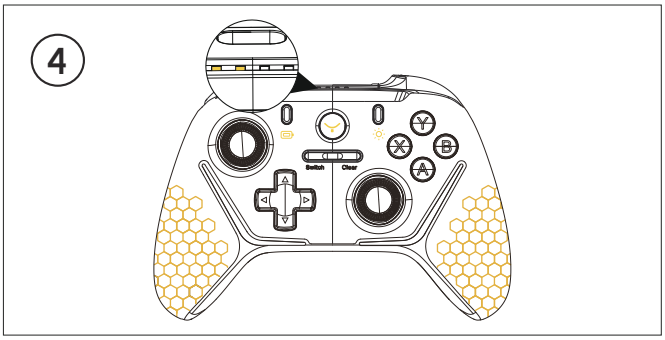

Observe the LED indicator on top of the Yarbo Controller. A steady yellow light means the controller has successfully connected.

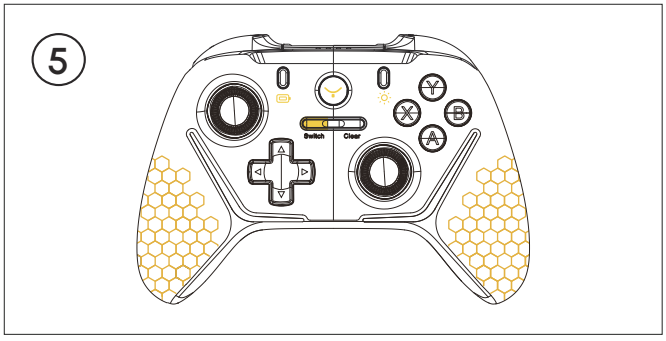

To obtain control of the physical controller, press and hold the Switch button for 2–3 seconds. Once control is granted, you can begin operating Yarbo.

5.2.2 Connecting physical controller to mobile phone

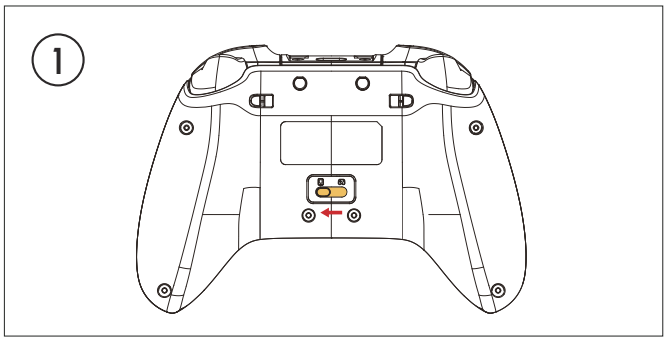

Make sure that the slide switch is slid to the left side.



Press for one second to pair the controller with the phone if the controller is on. Press and hold for about 5 seconds to start and pair the controller with the phone if the controller is off.

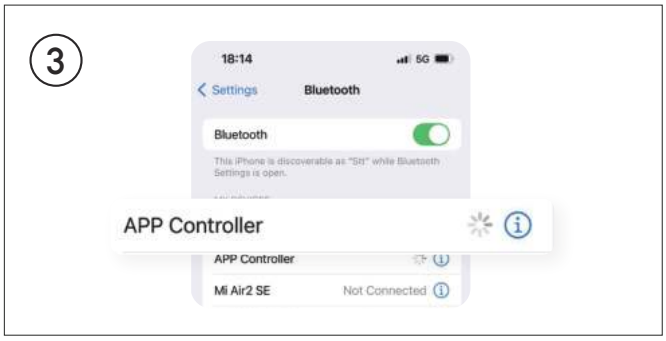

Open the phone setting page and turn on Bluetooth. Click the '**APP Controller**' to pair the Yarbo physical controller.

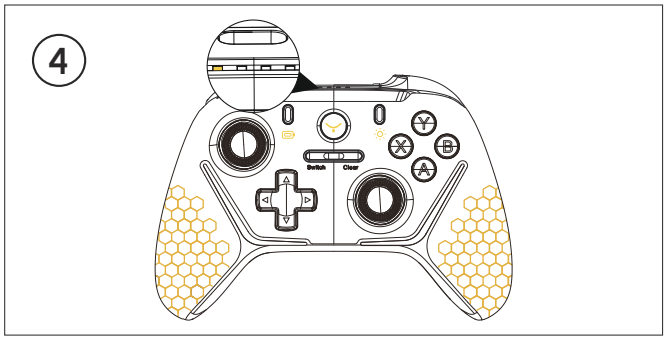

Observe the LED light on the top of Yarbo Controller. If the left yellow light is on steadily, it indicates that connected with the phone.

5.3 Yarbo Controller Holder Installation Guide

We offer an additional controller holder for our users, allowing them to conveniently place their mobile phones on the holder to see the camera view on-time.

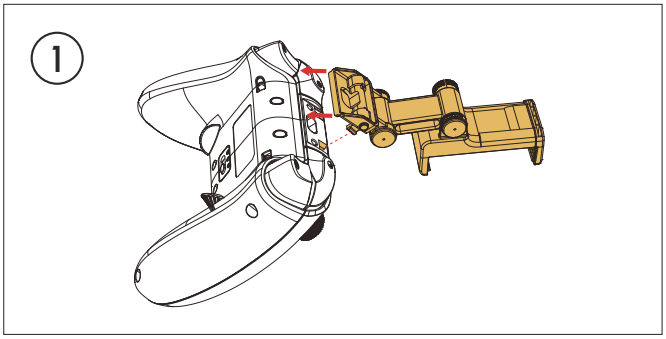

Locate the Physical Controller Holder provided in the Yarbo Core package and locate the side button on the Holder.

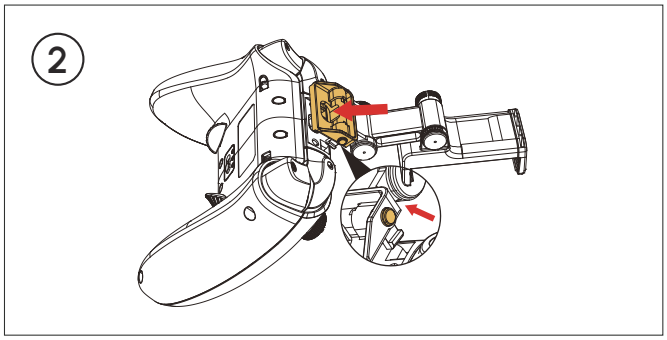

Locate the shafts and holes and press the buttons on both sides of the Holder, and then press the middle part as shown in the picture.

⚠ WARNING

- Never place the controller in the reach of children.
- Never allow unauthorized nor untrained persons to use the controller.

⚠ CAUTION

- DO NOT expose the controller to freezing temperatures for an extended duration.
- DO NOT spill water or snow on the surface of the controller. If any water or snow comes into contact with the controller, wipe it immediately.

⚠ NOTICE

- Please note that any damage or malfunction caused by or misuse of the controller will not be covered by the warranty.

5.4 LED Indicator Description

Yarbo connecting mode

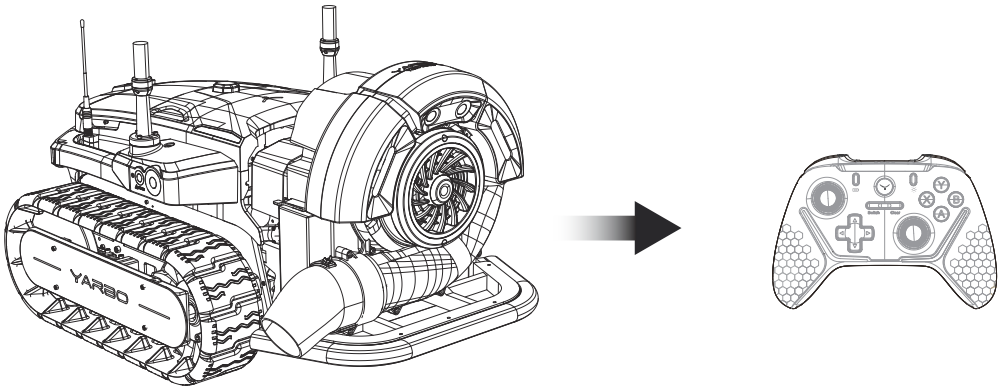

LED Indicator	Description
Two lights steady on 	Controller and the Yarbo are connected successfully
Two lights flash slowly 	Controller is connecting to the Yarbo
Two lights flash rapidly 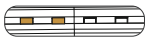	Initiate the pairing of the Controller with the Yarbo

5. Physical Controller Instruction

Phone connecting mode

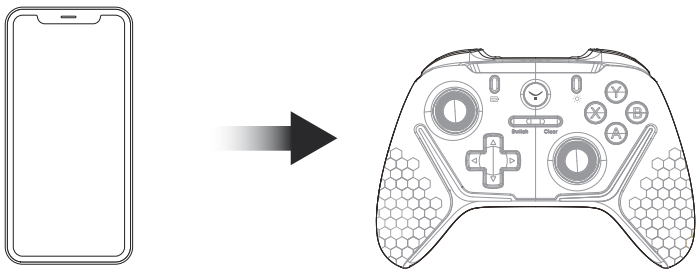

LED Indicator		Description
One light steady on	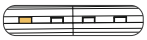	App and Controller are connected successfully
One light flash slowly	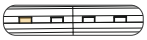	The Controller is connecting to the App
One light	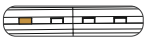	Initiating the pairing of the controller with the App

Additional Notes

Four lights flash during the charging process till fully charged.
Two flash lights indicate the battery level is low during use.

Maintenance Video

6. Maintenace Guide

6.1 Before Conducting Any Maintenance

⚠ WARNING

- Please ensure that you do not wear open-toed shoes or go barefoot when performing the following maintenance tasks.
- Always use appropriate Personal Protective Equipment (PPE). Wear protective gloves and goggles whenever performing maintenance tasks or when needed.
- Ensure that Yarbo is switched OFF and disconnects the battery when performing the following maintenance tasks.

Disconnecting Battery from Yarbo

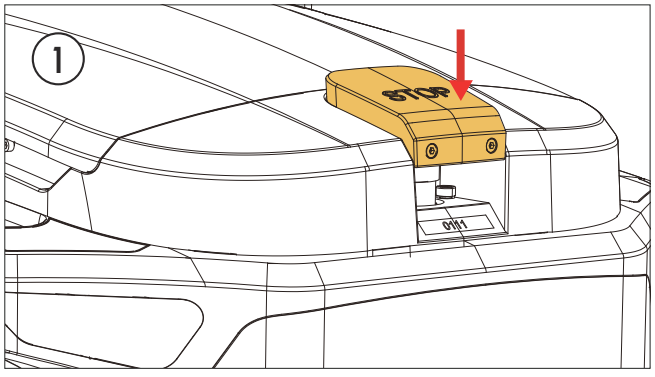

Press the Emergency Stop Button.

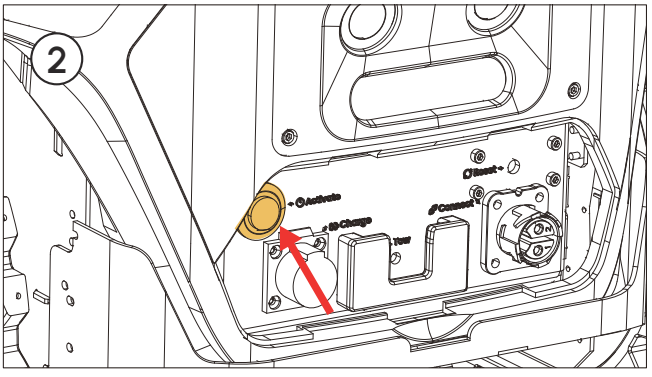

Confirm that Yarbo is turned off by checking if all the lights are switched off. For detailed instructions on how to turn off the machine, please refer to the **Yarbo App.**

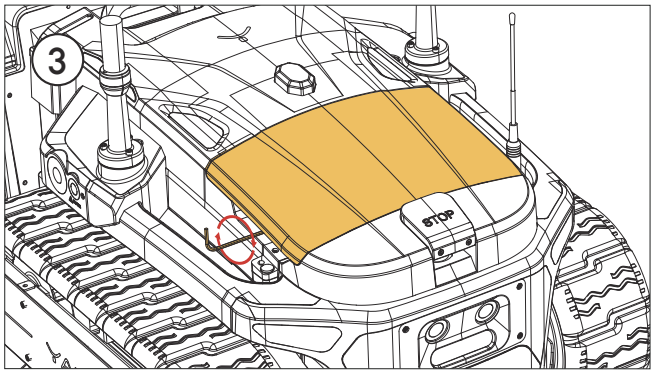

Unscrew the bolts on the side of the battery cover.

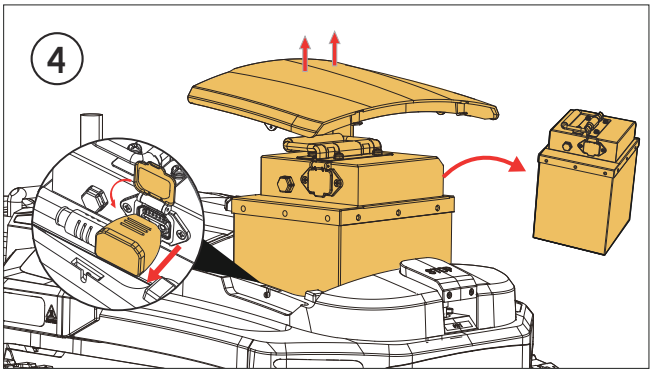

Remove the battery cover and unplug the cable connecting Yarbo and battery pack. **Remove** the battery pack and safely secure it.

6.2 Cleaning Yarbo Core

Please avoid using solvents or large amount of liquid on plastic components, as commercial solvents can potentially harm the appearance and integrity of your Yarbo. Instead, use a clean and gentle cloth or a brush to remove debris, mud, and other particles. Please avoid using the high-pressure water hose or any high pressure cleaning methods to clean the yarbo core.

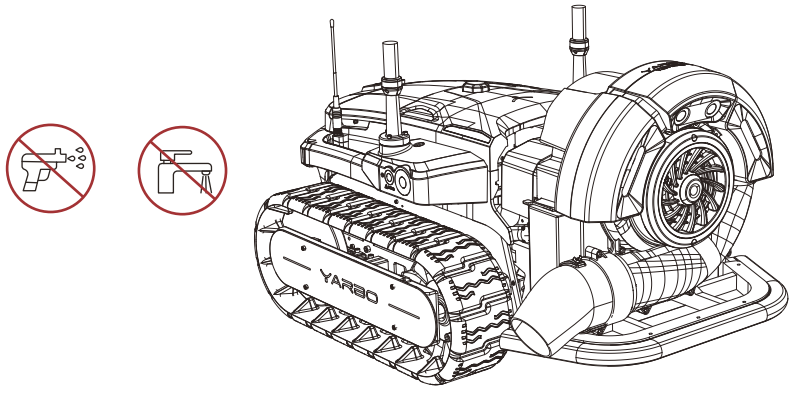

WARNING

- This statement advises that if a camera used for obstacle avoidance is covered, dirty, or unclear, it may lead to confusion about the visual algorithms that rely on these cameras. It suggests cleaning the cameras with a soft cloth to ensure they are clear and functioning properly.
- Ensure that the power socket does not come into contact with anything wet.

6.3 Applying Grease on the Tracks

It is crucial to apply grease regularly on the tracks to maintain smooth rotation of the drive wheel and road wheels. This is especially important during the machine's first year of use. Over time, grease may degrade and diminish, making regular refills essential. We advise applying grease every two weeks throughout the snow season. While various grease types are suitable, we recommend opting for high-vacuum grease for optimal performance. Below are the situations when immediate application of grease is needed.

- **Motion Hampered**: When you sense that your Yarbo has not been greased for a while and its motion might be hampered due to this.
- **Noisy Operation**: Unusual noise coming from the tracks indicates possible friction or wear. Applying grease can help reduce this noise by lubricating the moving parts and reducing friction.
- **Track Disengagement**: If you notice the track becoming detached from the main body during inspection, it could be due to inadequate lubrication. Greasing the tracks can help maintain a secure connection between the tracks and the main body of the machine.

⚠ NOTICE

- The presence of debris or mud on the rubber tracks can negatively impact Yarbo's driving performance. To maintain optimal performance, make sure to clean debris and mud from the rubber tracks on a regular basis.

6.4 Updating Firmware

Ensuring optimal performance of Yarbo at the hardware level is crucial, but it's equally vital to maintain the firmware up-to-date. Regular firmware updates notification will be made available through the Yarbo App. We highly recommend utilizing the built-in Over-The-Air (OTA) technology within the Yarbo App to update the firmware as soon as new versions are released. These updates consistently enhance the capabilities of the product.

Before proceeding to update firmware, please ensure that thefollowing conditions are met:

① Intalling Anti-slip Studs The battery level is at least 30%.
② Yarbo is connected to the internet.
③ No working schedules are active within the next hour to prevent interruptions during the update process.

6.5 Keeping Battery at its Best Performance

Extended periods of inactivity can significantly diminish the performance of the battery pack. To minimize this degradation, it's important not to leave the battery pack inactive for more than three months. Lithium-ion battery packs experience slight self-discharge over time. Charging the battery pack for at least 15 minutes once every three months will suffice to maintain its activity level.

NOTICE

- The battery pack lifespan is influenced by operation frequency and total working hours. If the operating time per full charge noticeably decreases, it might be the time to consider replacing the battery pack.

7. Specification

Yarbo Blower Module

Item	Value
Dimensions, length*width*height	562*370*458mm(22.1*14.6*18.0in)
Weight	13kg
AIR VOLUME AT NOZZLE	607CFM / 1031m³/h
MAX. AIR VELOCITY	174MPH / 78m/s
BLOWING FORCE	21N
Rotational Speed	8000RPM
Blower Motor Power	2000W
Charging Time	180min (0-100%)
Maximum Climbing Capability, Slope Degree	70%(35°)
Waterproof level	IPX4

8. Limited Warranty

8.1 Residential Warranty Coverage

Item	Parts	Warranty Period
Motor system	Linear Actuator	2 Years
	Driving Motor	
Power System	Lithium-ion Battery	2 Years
	Power Adapter	
	Docking Station	
Electric Control System	RTK System	2 Years
	Motherboard	
Vision System	Camera	2 Years
Consumables	Shell	1 Year
	Track	No Warranty

Item	Parts	Warranty Period
Motor System	Auger/Impeller Motor	2 Years
	Chute Rotation Motor	
	Deflector Motor	
Vision System	Camera	2 Years
Consumables	Skid Shoes	2 Years
	Top Chute	
	Impeller	
	Shell	
	Auger Blades	2 Years
	Belts	1 Year
	Scraper Bar	

8.2 General Statement

1. Yarbo Inc. shall not be liable for compensation if it can prove one of the following circumstances:

① The product has not been put into circulation;
② When the product is put into circulation, the defect causing damage does not yet exist;
③ When the product is put into circulation, the scientific and technological level cannot yet detect the existence of defects.

2. The warranty service is valid from the date of product delivery. When requesting after-sales service, our authorized service dealer may require the original invoice or receipt containing relevant information. In the absence of proof of purchase, the warranty period will commence based on the product's manufacturing date.

3. This warranty applies exclusively to original purchasers. Replacements do not initiate a new warranty; the original warranty remains valid from the initial delivery date. It's important to note that you may be responsible for covering the delivery costs associated with return, repair, or replacement of the product.

4. Yarbo will perform a diagnostic assessment on the returned product. If the defective product aligns with our limited warranty policy, Yarbo will cover the cost of repair or replacement. However, you may be responsible for the associated delivery charges.

5. Yarbo assumes no liability for any direct or indirect consequences arising from any cause, including but not limited to loss of use or loss of profits.

6. Please be mindful that any damage resulting from inappropriate packaging, other than the standard Yarbo packaging, is the sole responsibility of the customer. If you no longer have the original packaging, you must obtain suitable packaging or consult Yarbo's technicians for proper packaging guidance.

Repair and Warranty Services:

We have established a global after-sales service team, supported by local service partners, to ensure prompt and efficient service for all our users worldwide. Our comprehensive support includes a dedicated call center and local repair centers in key markets.

To request a repair service, please send your request to **support@yarbo.com** or contact us at **+1(888)-550-6809.**

If your product is still within the free warranty period and meets the criteria for a warranty repair, the service will be provided at no charge. If your product does not qualify for free warranty repair, standard repair fees may apply.

8.3 Warranty Forfeiture

The warranty may be forfeited under the following circumstances:

1. Failure to adhere to the operating or maintenance guidelines outlined in the User Manual.
2. Neglecting to perform the prescribed battery and product maintenance procedures.
3. Modification or repair conducted by an unauthorized service provider.
4. Damages resulting from forced operation with aged or deteriorated components.
5. Damages or product malfunctions arising from the misuse of unauthorized components or accessories.
6. Damages caused by non-defective factors, including but not limited to crashes or collisions. Additionally, damages caused by manually operating the product with a low-charged or defective battery, or tampering with the seals and labels on the product.
7. Components subject to normal wear and tear, such as the auger, rubber track, belt, or other parts subjected to typical usage, are not covered by warranty. For the purchase of these items, refer to our website at www.yarbo.com/pages/contact-us or connect with an authorized service dealer.
8. Warranty coverage does not extend to products used for commercial purposes. Commercial use includes instances where the product is employed in institutions, rented out, or utilized at multiple locations.

YARBO INC.

www.yarbo.com

For Privacy Policy, please visit:
https://www.yarbo.com/legal/privacy-policy
Please note, the User Manual may be updated based on the changes in production, product specification, included contents and so on.
For the latest version of the User Manual, please visit:
https://www.yarbo.com/support

Refer to Friends & Get Rewards

Share Your Yarbo Journey

Join Yarbo Exclusive Community

+1 (888)550-6809

support@yarbo.com

1951 Ocean Avenue, Unit 3, Ronkonkoma, NY 11779 United States

V 1.2.6