YARBO

YARBO TRIMMER MODULE

QUICK START GUIDE

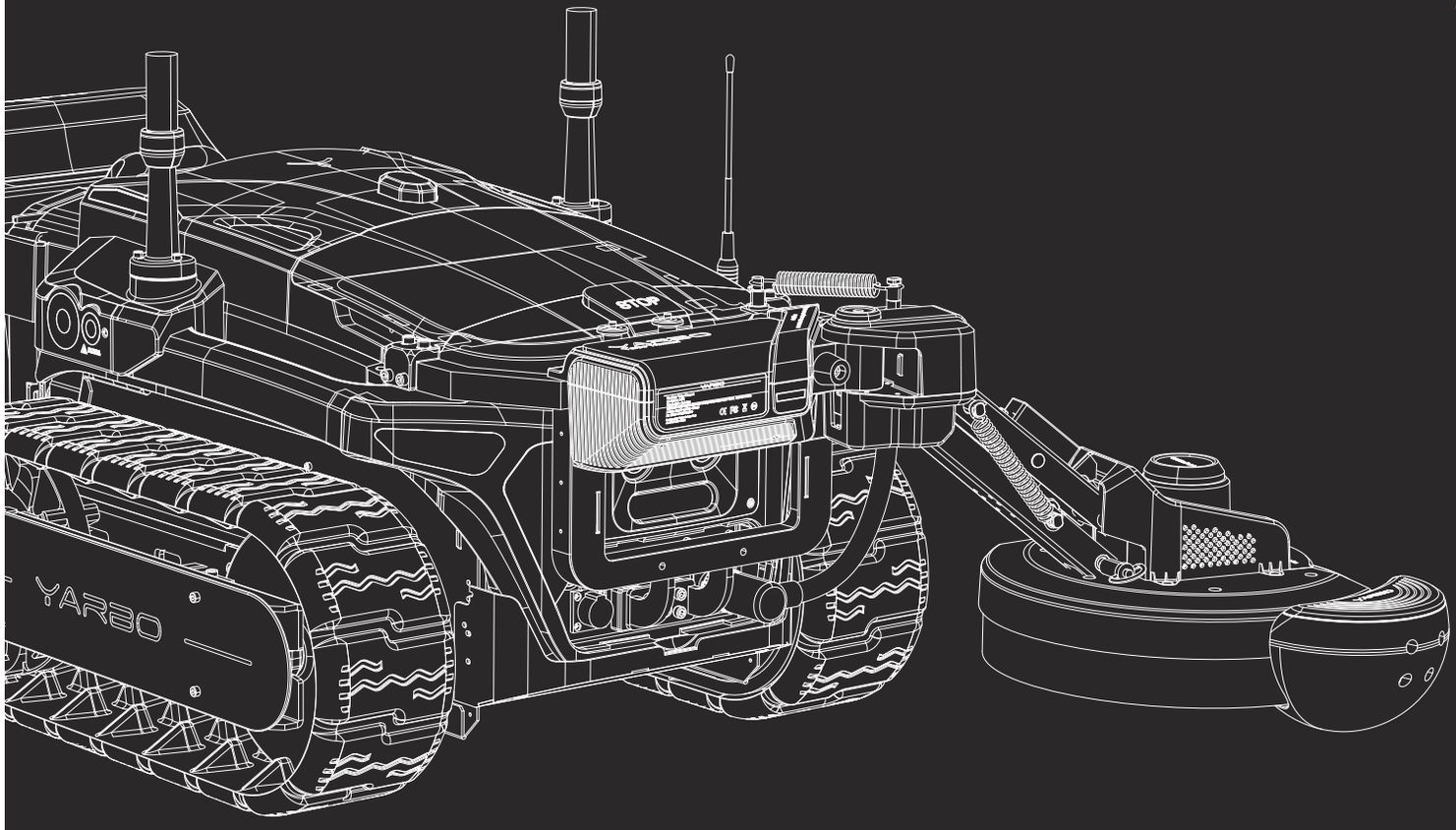

User Manual

Video Assembly Guide

Welcome



Thank you for choosing the Yarbo Yard Robot. We are pleased to welcome you to our user community. To help you get the most out of your device while ensuring safe operation, we strongly recommend that you read this quick start guide thoroughly, with particular attention to the sections on correct usage and potential safety hazards.

Safety

⚠ MUST READ

Failure to follow safety instructions may result in serious injury or property damage. Yarbo disclaims any liability for consequences arising from improper use or failure to follow these instructions.

⚠ 1.1 Pre-operation Safety Instructions

■ Ensure the area is free of obstacles that may cause damage to the product.
■ Verify that the product is functioning correctly before use.
■ Do not use the product if any parts are broken or malfunctioning.
■ Do not allow children or pets to access the controller (physical or mobile app).
■ Ensure the product is assembled and operated according to the user manual. The operator must read and fully understand the manual before use.
■ Clean the cameras before use, if needed. Use only non-corrosive cleaners and soft materials. Take extra care, as the cameras may become hot and cause burns due to the heating film.

⚠ 1.2 Operation Safety Instructions

■ Always maintain a safe distance when using the controller or during automatic operation. Never place any part of your body near or under the Yarbo system, especially when it is turning or climbing slopes.
■ Do not allow children, individuals with physical, sensory, or mental limitations, or those lacking experience or knowledge to operate Yarbo. Please note that local regulations may impose age restrictions on the operator.
■ A trained and authorized individual must supervise untrained persons whenever Yarbo is in operation.
■ Do not operate Yarbo if the operator is under the influence of alcohol, drugs, or illness.
■ Do not throw objects toward the product or surrounding vehicles and buildings, as this may damage the auger or impeller of the active module.
■ If Yarbo is operating in public spaces, clearly display warning signs around the work area. Examples include:
"Warning! Automatic Snow Blower! Keep away from the machine! Supervise children!"
"Warning! Automatic Lawn Mower! Keep away from the machine! Supervise children!"
"Warning! Automatic Blower! Keep away from the machine! Supervise children!"

Safety

■ Do not operate Yarbo near fires, hot ashes, or heat sources to prevent fire hazards.
■ Ensure Yarbo is powered off before clearing blockages, performing maintenance, or conducting inspections. If abnormal vibrations occur, stop operation immediately, press the emergency stop button, and inspect the device for damage. If the vibration continues, remove the battery and check for potential faults.
■ Never step or sit on Yarbo at any time.
■ Only use the provided docking station to charge Yarbo. To avoid electric shock, overheating, or battery leakage, do not touch any part of the charging station during charging.
■ Caution: Slippery Surfaces — Areas where snow has been cleared may remain slippery. Pedestrians and vehicles should proceed with caution to avoid accidents.
■ Adapt to Extreme Weather — In extreme conditions (e.g., heavy snowfall or icy surfaces), Yarbo's performance may be affected. Adjust your operation strategy accordingly for optimal and safe use.

⚠ 1.3 After-operation Safety Instructions

■ Always wear gloves and follow the recommended maintenance procedures. Shut down Yarbo and remove the battery before performing any maintenance, inspections, or clearing blockages in the discharge chute.
■ Disconnect the battery from the core if Yarbo will not be used for an extended period.
■ Regular Maintenance: Regularly inspect the blades, battery, motor, and other parts to ensure proper function and minimize the risk of malfunction.

⚠ Disclaimer

This safety guide is provided for general informational purposes. The operator is solely responsible for ensuring compliance with local laws, regulations, and safety standards. Yarbo disclaims all liability for injuries, damages, or losses arising from improper use, failure to follow these instructions, or failure to comply with applicable local laws and regulations.

Step 1: What's in the Box

Upon opening the BBM accessory package, you should find the following components:

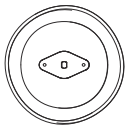

Spare Trimmer Head



Positioning Maintenance Tool



X2

Spare Trimmer Line Spool



X2

Spare Extension Springs



Yarbo Trimmer Module Quick Start Guide

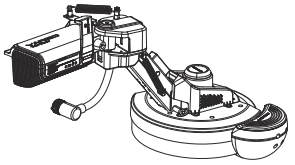

Yarbo Trimmer Module

(With Spare Trimmer Line Spool pre- installed)



Allen Key #2



Nut Driver



X2

Locking Pin #1

Step 2: Installation Guide

Before you begin:

1. Make sure the **Back Brace Mount (BBM)** has already been installed on your Yarbo unit.
(For BBM installation instructions, please refer to the BBM Quick Start Guide.)

2. Trimmer and Tow Hitch cannot be used together. Please remove the Tow Hitch before installing the Trimmer.

3. Ensure the Yarbo Core is shutdown/Powered off.

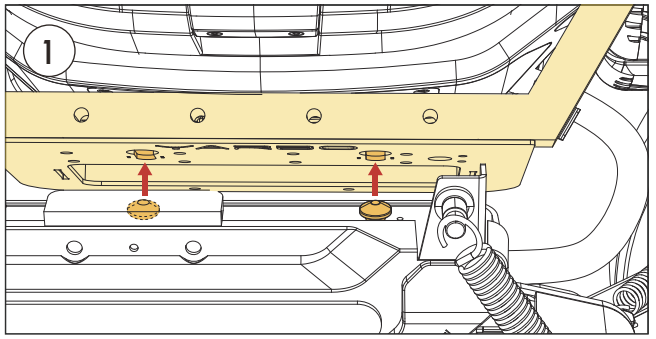

1. Align the Module

Position the **back of the Trimmer Module** so that it aligns with the **BBM** on Yarbo Core. Ensure that the two **latch hooks** on the module align with the **sliding slots** on the bracket. Gently push the module inward along the rails until it **clicks into place**.

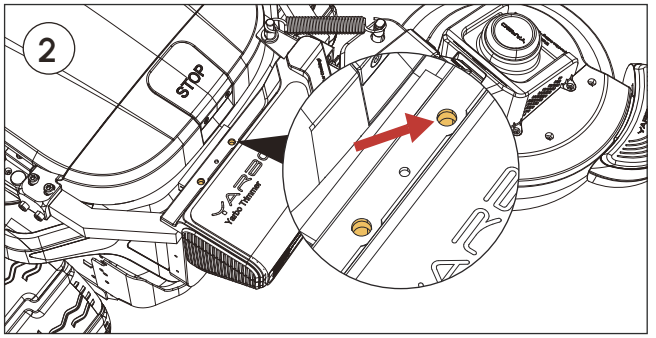

2. Level and Align

Before securing the module, ensure the bolt holes are properly aligned. Then lift the **Trimmer Disc** so that it is **level with the arm**, and **parallel to the ground**.

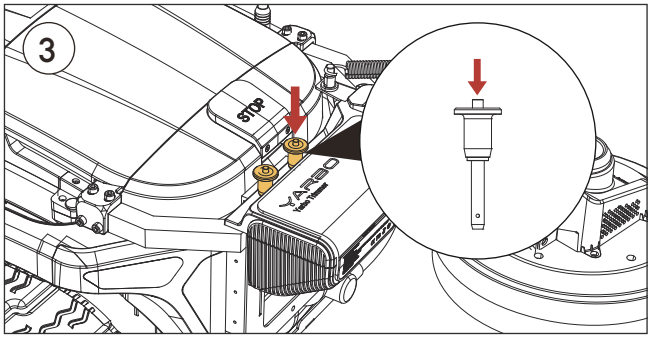

3. Insert the Locking Pin # 1

Press the **locking button** on top of each pin, insert them fully into the aligned holes, and then **release the buttons**. The pins will automatically lock into place. (Ensure both pins are **fully seated and secure** before proceeding.)

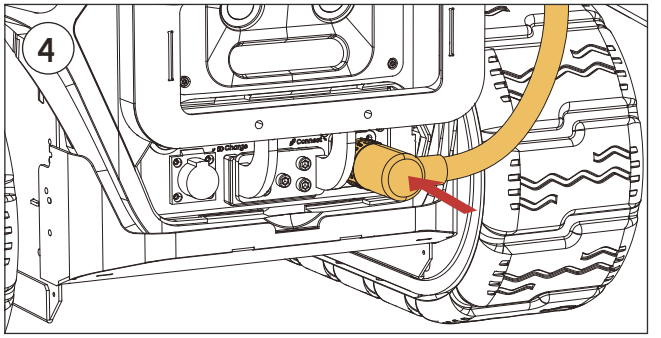

4. Connect the Module Cable

Insert the **power connector** from the Trimmer Module into the Yarbo Core. Ensure correct alignment. A **'click' sound** indicates that the connection is securely locked.

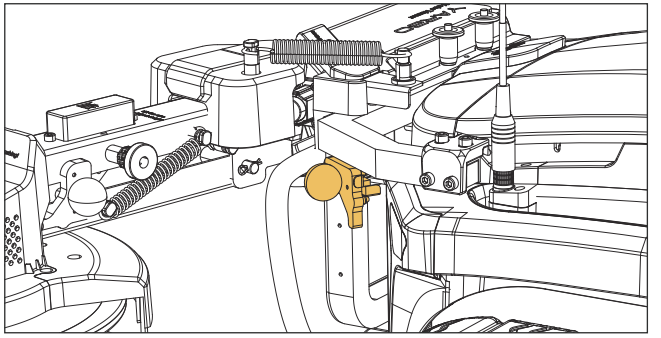

Please place the **Positioning Maintenance Tool** onto the storage slot, the magnet will hold it securely.

5 Installing Yarbo App

The Yarbo App is a professional application that empowers you to manage and control your Yarbo anytime, anywhere, elevating your snow cleaning experience to new heights. With its impressive features, you can easily set up work schedules, define multiple working areas and no-go zones, and monitor Yarbo's operating status. Additionally, you can receive the latest firmware updates and access instruction manuals, video tutorials, FAQs, and more through the App.

Follow these simple steps to install and set up the Yarbo App:

① Download the Yarbo App by scanning the QR code below or searching on the app store.
② After installation, log in to your Yarbo account. If you don't have one, please register.
③ Follow the steps of the first-time user guide on the app. If there are few steps that are hard to understand, please refer to the app section of this user manual.

*Note: Once a device is associated with a Yarbo account, it cannot be linked to a new account. However, you can invite others to use your Yarbo through Yarbo Sharing in the app.

iOS

Available on the App Store

Android

GET IT ON Google Play

Step 3: Height Adjust & Powering On

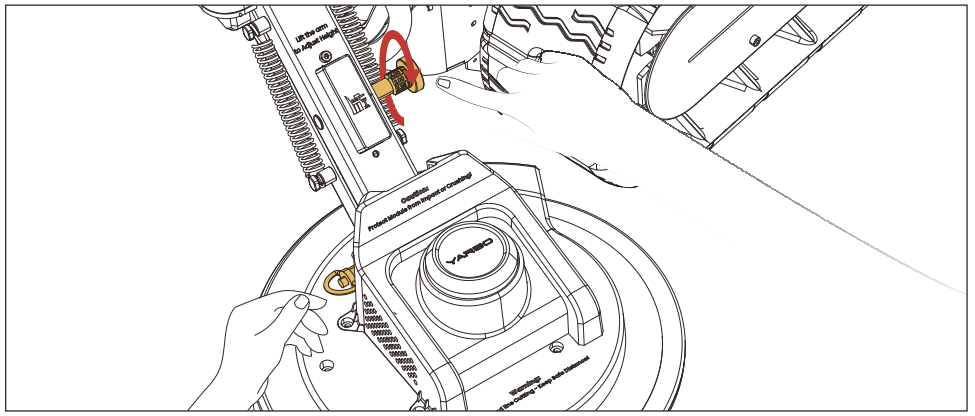

Lift the trimmer arm, then gently rotate the multi-sided height adjustment knob (clockwise or counterclockwise) to adjust the cutting height to your desired level.

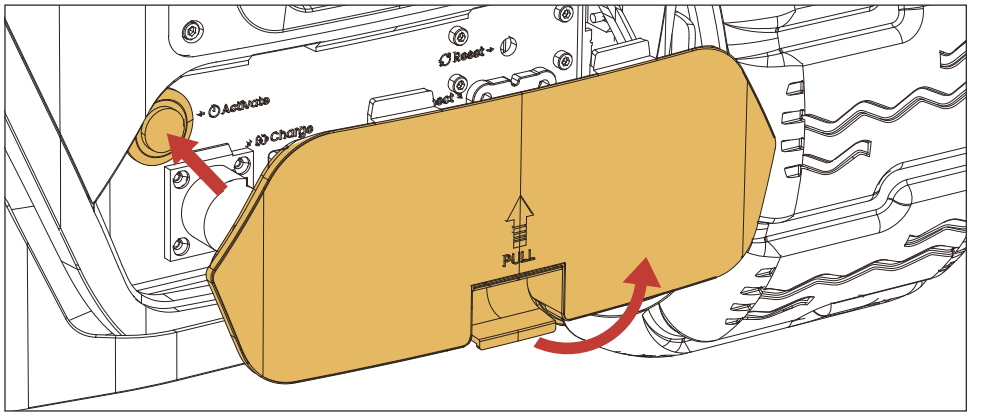

Remove the rear cover. Press the Activate Button to turn on Yarbo. Reinstall the rear cover.

(For detailed instructions on how to turn off the machine, please refer to the Yarbo App)

Safety Instructions

⚠ WARNING: Flying Debris Hazard

The trimmer line rotates at high speeds and may cause stones or debris to be thrown.

- Always maintain a minimum 30-foot (10-meter) safety radius when the trimmer module is working.
- Keep children, pets, and bystanders away from the working area.

Maintenance

⚠ WARNING: Power Off Before Approaching

Always turn off the trimmer before getting close to the device.

- Use the **physical controller or Yarbo App** to stop the Trimmer module before any inspection or interaction.
- If an **automatic trimming schedule** is active, pause or disable it in the app to avoid accidental activation.

⚠ WARNING: Contact with Trimmer Line

Avoid any contact with the rotating trimmer line.

- The high-speed line can cause serious injury or damage to your body or clothing.
- Only approach the Trimmer when the cutting head has come to a complete stop.
- Ensure the E-Stop is engaged when performing maintenance and the core is shutdown and powered off.

Maintenance

Line & Spool

How often should I replace the trimmer line spool?

- A full spool typically lasts **1 month or longer**, depending on lawn size and frequency of use.
- Each product box comes with **2 refillable spools**.
- Additional spools can be purchased from the **official Yarbo store**

Can I use my own trimmer line?

Yes. You may refill the spool with your own line.

- **Recommended line diameter: 1.5mm to 2.0mm(0.06in to 0.08in)**
- Use round high-quality nylon or reinforced composite line for best performance.

A. Line-Cutting Blade

The steel line-cutting blade is mounted on the edge of the guard and is designed to maintain the trimmer line at an optimal cutting length. Over time, the blade may become dull due to normal wear and contact with grass, dirt, or small debris. It is recommended to inspect the blade regularly and either sharpen or replace it as needed.

⚠ WARNING

Always wear heavy-duty gloves and eye protection when performing maintenance on the cutting blade to avoid injury.

Preparation: **Power Off**

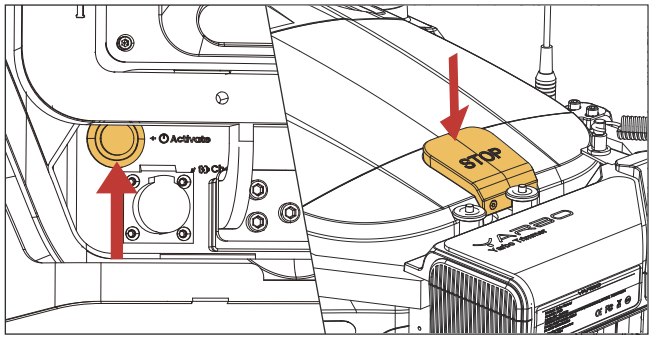

Shutdown the Yarbo Core in the Yarbo app or the Physical Controller. Press the Emergency Stop button on Yarbo Core, or Turn off the Activation button to fully shut down the system.

Line-Cutting Blade

Access the Module

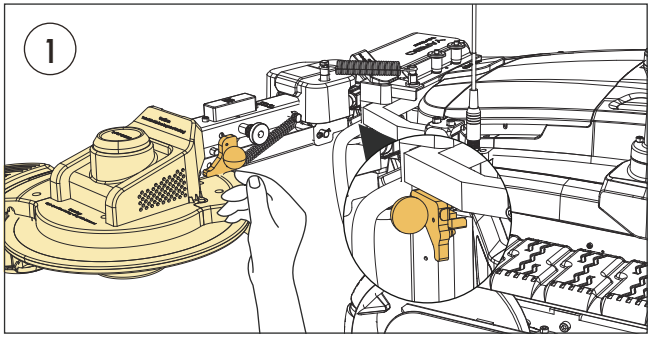

Remove the positioning maintenance tool from the storage slot and insert it into the alignment slot after lifting the trimmer arm.

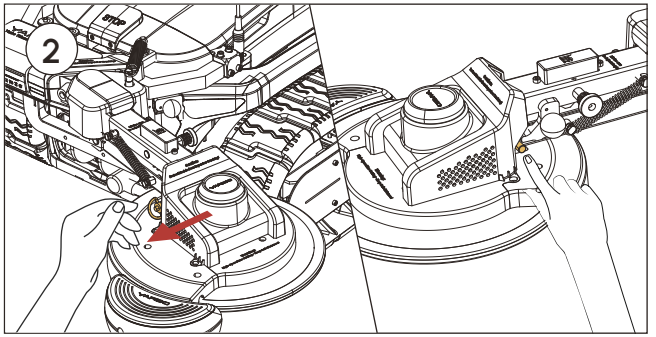

Once the tool is secured, remove the Locking Pin #2.

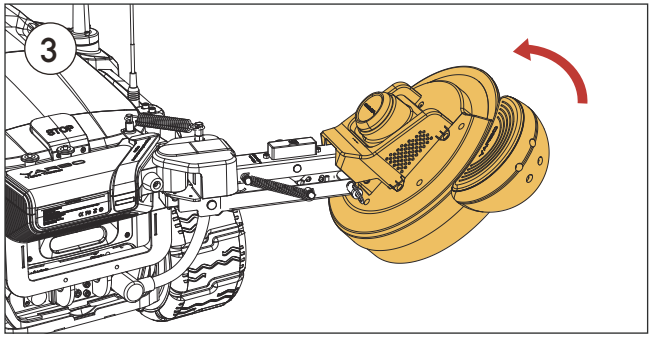

Then carefully flip the Trimmer Disc upward to expose cutting blade or spool housing.

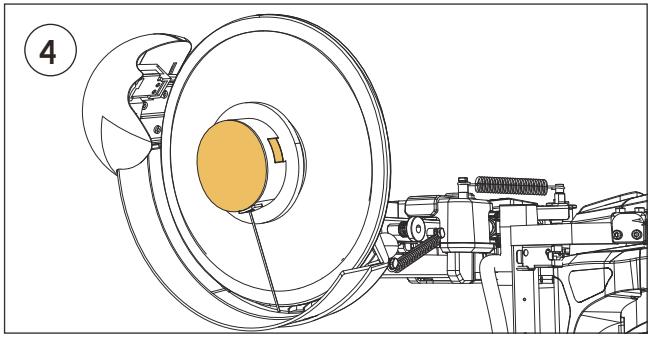

Flip the Trimmer Disc upward to expose the blade or spool housing.

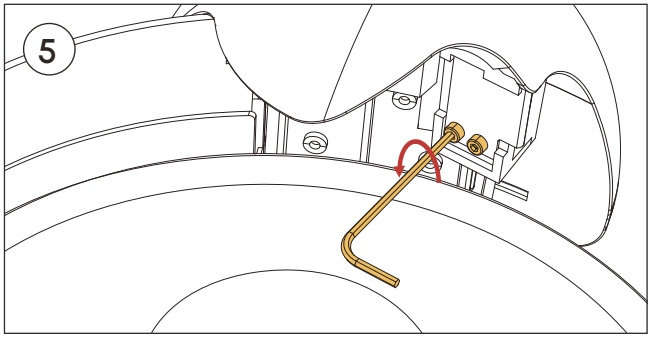

Remove the worn blade by using Allen Key #2, align the new blade with the mounting point, and secure it using the original screws.

Removing the Module

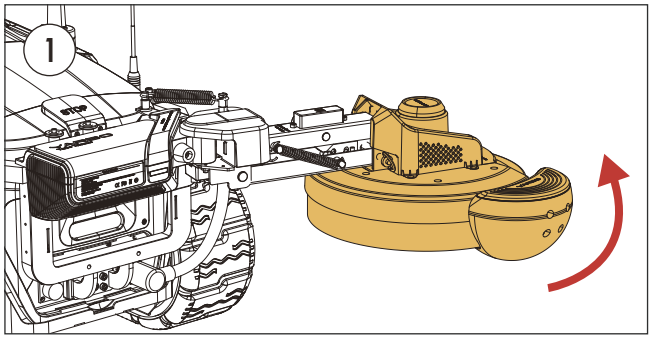

Level the Trimmer Disc: Lift the trimmer Disc until it is level with the arm and parallel to the ground.

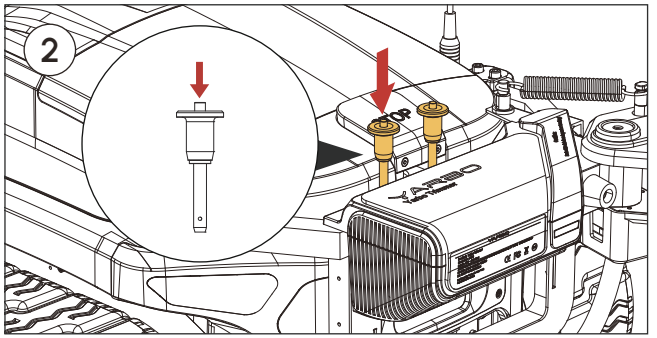

Remove the Locking Pin: Press the locking button and pull out the Locking Pin # 1.

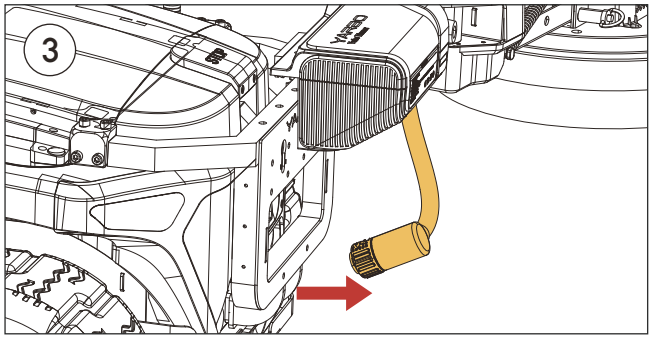

Disconnect the module cable from Yarbo Core, then lift the Trimmer Module upward to remove it from the BBM.

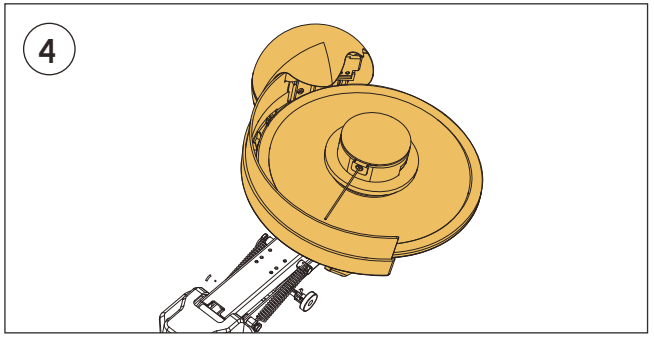

Place the Trimmer Module **flat** on a stable surface to prevent movement during maintenance and storage.

Troubleshooting

B. Troubleshooting

Line Issues

If the line stops feeding correctly or becomes tangled, replace the trimmer line spool by following these instructions:

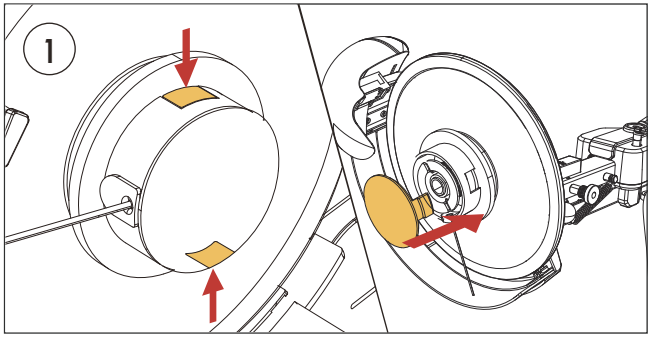

Press the side tabs to remove the spool cover.

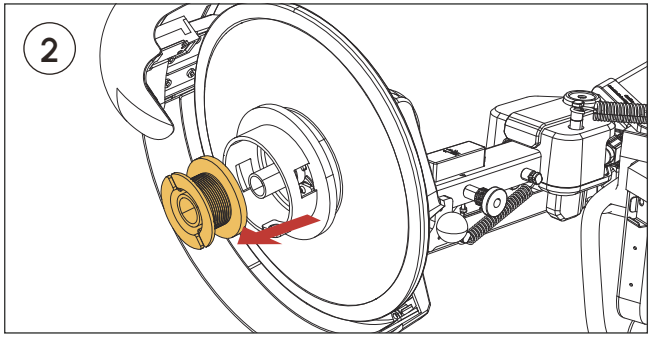

Remove the old spool and clean the housing.

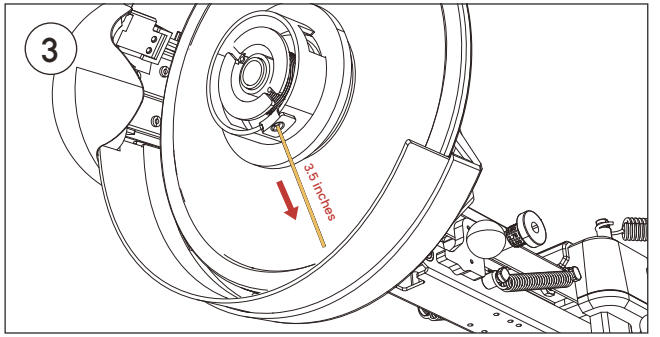

Insert a new spool, or rewind the spool with 1.5–2.0 mm line, winding in the direction of the arrow. Thread the line end through the exit eyelet, leaving about 9 cm (3.5 in) of line protruding.

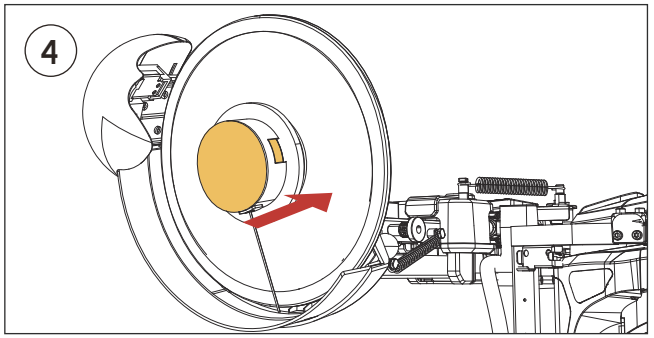

Snap the spool cap in place. Make sure the line stays within the blade range. (Rotate the head cover if the tabs don't align.)

B. Troubleshooting

Both Ends of the Line Unhooked

If both line ends come loose during the check in the “Line Issues” section, follow the steps below:

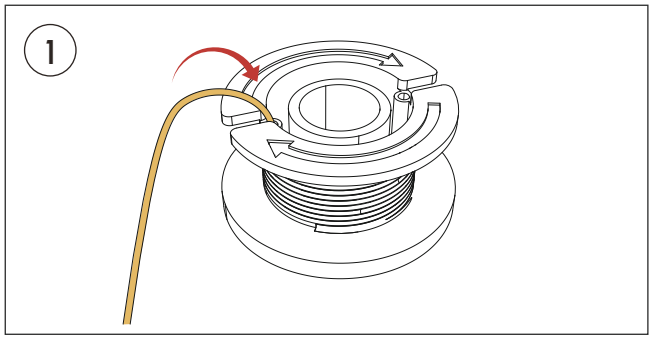

Remove any remaining cutting line from the spool. Make a fold at the end of the cutting line at about 3/4 inch (19mm). Feed the cutting line into one of the line anchoring slots.

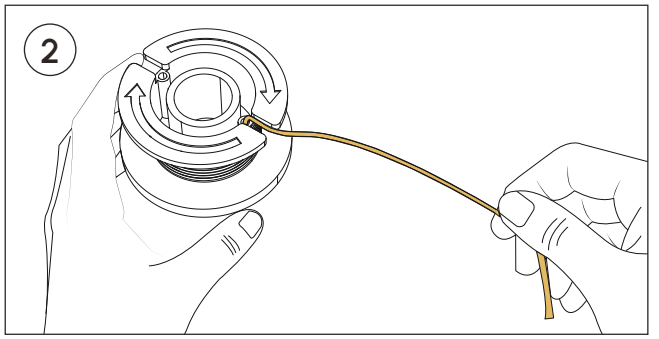

Insert the 3/4 inch (19mm) end of the bulk line into the hole in the spool adjacent to the slot. Make sure the line is pulled tight against the spool.

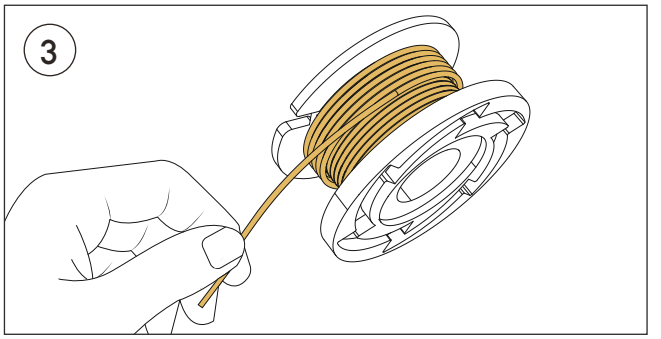

Wind the cutting line onto the spool in the direction of the arrow on the spool. Make sure to wind the line on neatly and in layers.

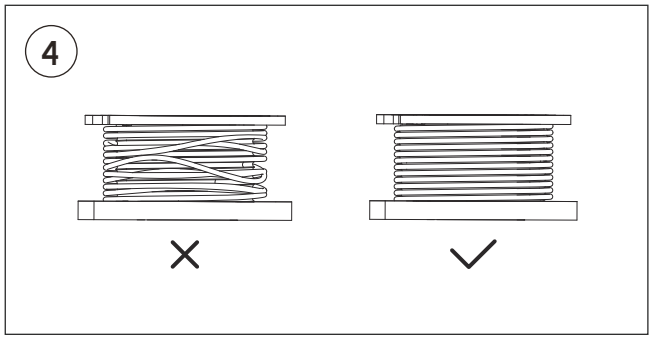

Do not crisscross. When the wound cutting line reaches the recesses, cut the line. Fit the spool onto the appliance as described in “Line Issues”.

Troubleshooting

Trimmer Head Replacement

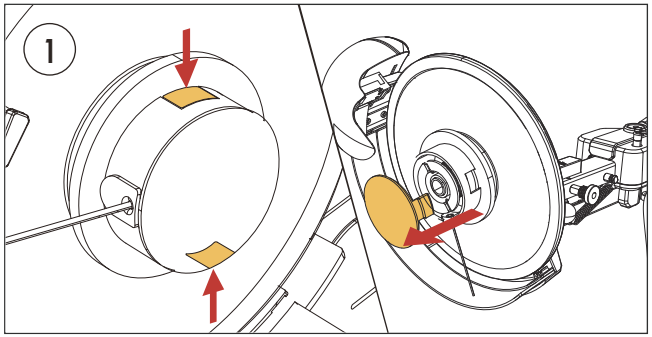

Press the side tabs to remove the spool cover.

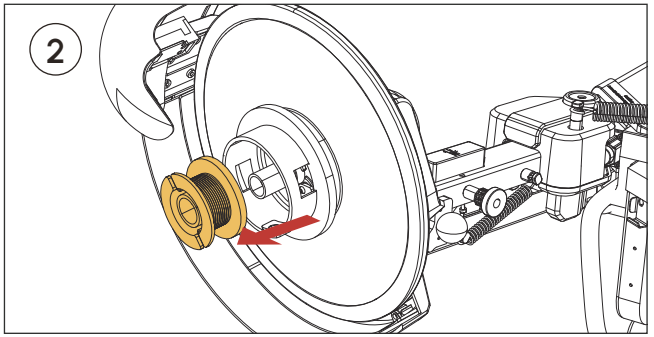

Remove the old spool and clean the housing.

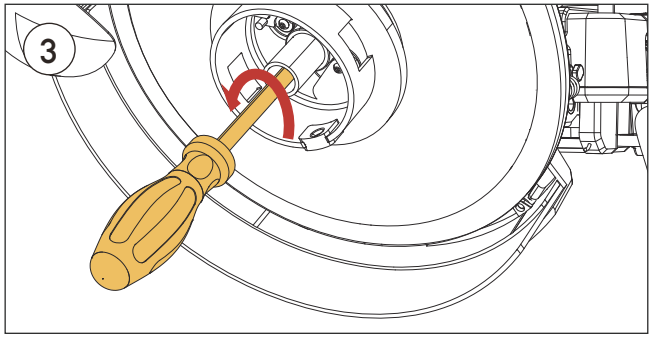

Use the **Nut Driver** to loosen the center nut of the **Trimmer Head** by turning it counterclockwise.

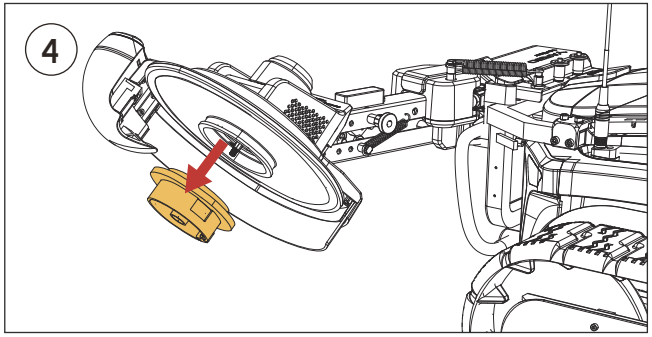

Carefully detach the old trimmer head from the shaft.

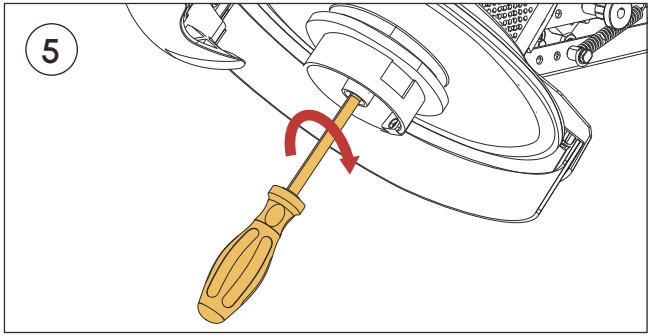

Place the new trimmer head onto the shaft and align it properly. Tighten the center nut firmly with the Nut Driver.

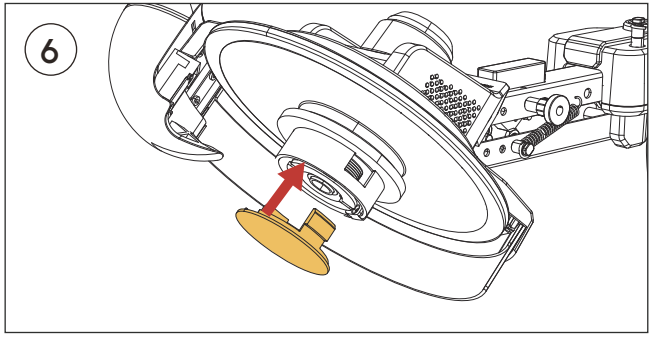

Put the Trimmer Line Spool and spool cover back in place until the side tabs click.

Physical Controller Button Introduction:

Mowing Only Mode



Unlocking: Press LB to unlock control.



If there is no control input within 5 seconds, control authority will be revoked.

Mowing & Trimming Mode | SAM & Trimming Mode

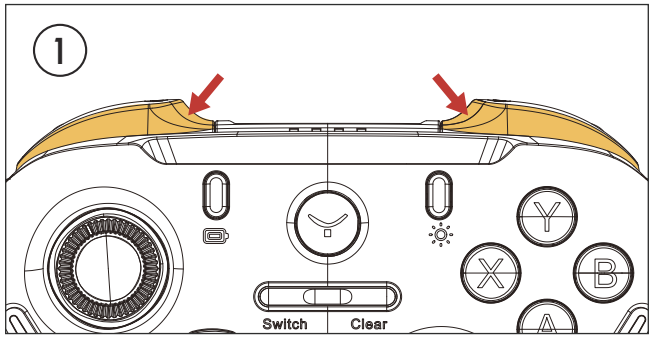

Press and hold both LB and RB together for 2 seconds to start the trimmer motor.



Then release RB , the motor continues to run.

YARBO INC.

www.yarbo.com

Refer to Friends
& Get Rewards

Share Your
Yarbo Journey

Join Yarbo
Exclusive Community

+1 (888)550-6809

support@yarbo.com

1951 Ocean Avenue, Unit 3, Ronkonkoma, NY 11779 United States

V 1.6