YARBO

2025

# USER MANUAL

## YARBO CORE

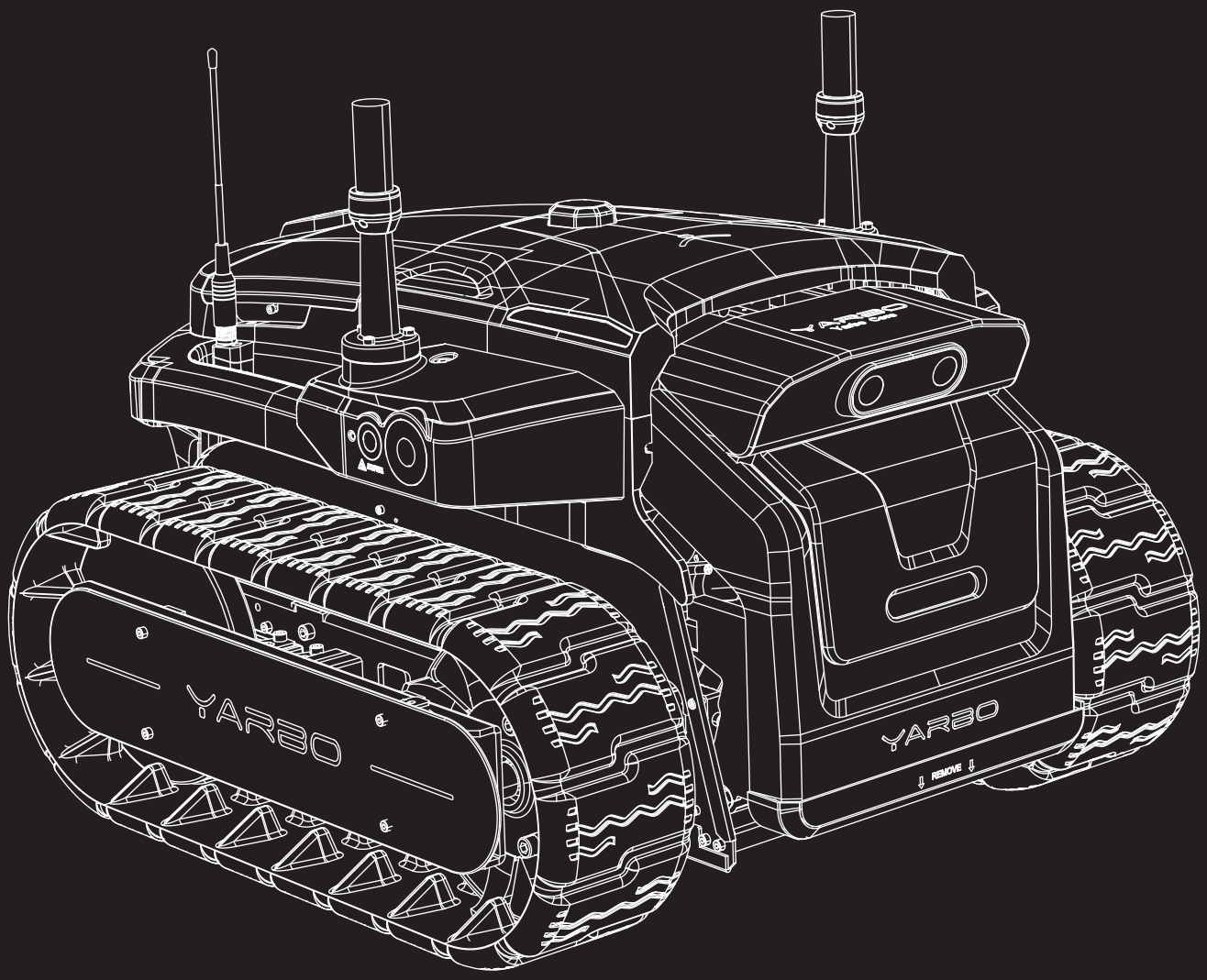


User Manual

Video Assembly Guic

YARBO

Table of Contents


## Safety

1.1 Pre-Operation Safety Instructions 01
1.2 Operation Safety Instructions 01
1.3 After-Operation Safety Instructions 02

## Box Content Introduction

2.1 Box Content 03
21.1 Yarbo Core Box 03
2.1.2 Battery Box 03
2.1.3 Docking Station & Smart Assit Module Box 04
2.2 Product Overview 05
2.2.1 Yarbo Core 06
2.2.2 Data Center 07
2.3 Status Indicators
2.3.1 Yarbo Core Headlight LED Status 08

## Setup Guide

3.1 Assembling Yarbo Core 09
3.2 Installing Yarbo App 10
3.3 Installing Data Center 13
3.3.1 Installation Preparation 14
3.3.2 Data Center Installation 15
3.3.3 Ethernet Cable Connection 23
3.3.4 Data Center Signal Lights 24
3.4 Installing Docking Station 25

## Yarbo APP Features

4.1 Features Statement 27
4.2 Remote Control 29
4.3 Intelligent Towing 3 1

4.4 Auto Patrol 32
4.5 Follow Me 33

## Physical Controller Instruction

5.1 Button Introduction 34
5.2 Connecting Yarbo Controller 37
5.3 Yarbo Controller Holder Installation Guide 39
5.4 LED Indicator Description 41

## Maintenance

6.1 Charging 43
6.1.1 Charging Yarbo With a Wired Charger 43
6.1.2 Charging Yarbo with Docking Station 44
6.2 Before Conducting Any Maintenance 45
6.3 Cleaning Yarbo Core 46
6.4 Installing Tow Hitch 47
6.5 Applicating Grease on the Tracks 48
6.6 Updating Firmware 49
6.7 Keeping Battery at its Best Performance 49

## Specifications

7.1 Yarbo Core 50
7.2 Docking Station 51
7.3 Battery 52

## Limited Warranty

8.1 Residential Warrant Coverage 53
8.2 General Statement 55
8.3 Warranty Forfeiture 56

# Welcome




Thank you for choosing the Yarbo Yard Robot. We are pleased to welcome you to our user community. To help you get the most out of your device while ensuring safe operation, we strongly recommend that you read this user manual thoroughly, with particular attention to the sections on correct usage and potential safety hazards.

# 1. Safety

## ⚠ MUST READ

**Failure to follow safety instructions may result in serious injury or property damage. Yarbo disclaims any liability for consequences arising from improper use or failure to follow these instructions.**

## ⚠ 1.1 Pre-operation Safety Instructions

■ Ensure the area is free of obstacles that may cause damage to the product.
■ Verify that the product is functioning correctly before use.
■ Do not use the product if any parts are broken or malfunctioning.
■ Do not allow children or pets to access the controller (physical or mobile app).
■ Ensure the product is assembled and operated according to the user manual. The operator must read and fully understand the manual before use.
■ Clean the cameras before use, if needed. Use only non-corrosive cleaners and soft materials. Take extra care, as the cameras may become hot and cause burns due to the heating film.

## ⚠ 1.2 Operation Safety Instructions

■ Always maintain a safe distance when using the controller or during automatic operation. Never place any part of your body near or under the Yarbo system, especially when it is turning or climbing slopes.
■ Do not allow children, individuals with physical, sensory, or mental limitations, or those lacking experience or knowledge to operate Yarbo. Please note that local regulations may impose age restrictions on the operator.
■ A trained and authorized individual must supervise untrained persons whenever Yarbo is in operation.
■ Do not operate Yarbo if the operator is under the influence of alcohol, drugs, or illness.
■ Do not throw objects toward the product or surrounding vehicles and buildings, as this may damage the auger or impeller of the active module.
■ If Yarbo is operating in public spaces, clearly display warning signs around the work area. Examples include:
"Warning! Automatic Snow Blower! Keep away from the machine! Supervise children!"
"Warning! Automatic Lawn Mower! Keep away from the machine! Supervise children!"
"Warning! Automatic Blower! Keep away from the machine! Supervise children!"
■ Do not operate Yarbo near fires, hot ashes, or heat sources to prevent fire hazards.

■ Ensure Yarbo is powered off before clearing blockages, performing maintenance, or conducting inspections. If abnormal vibrations occur, stop operation immediately, press the emergency stop button, and inspect the device for damage. If the vibration continues, remove the battery and check for potential faults.
■ Never step or sit on Yarbo at any time.
■ Only use the provided docking station to charge Yarbo. To avoid electric shock, overheating, or battery leakage, do not touch any part of the charging station during charging.
■ Caution: Slippery Surfaces — Areas where snow has been cleared may remain slippery. Pedestrians and vehicles should proceed with caution to avoid accidents.
■ Adapt to Extreme Weather — In extreme conditions (e.g., heavy snowfall or icy surfaces), Yarbo's performance may be affected. Adjust your operation strategy accordingly for optimal and safe use.

## ⚠ 1.3 After-operation Safety Instructions

■ Always wear gloves and follow the recommended maintenance procedures. Shut down Yarbo and remove the battery before performing any maintenance, inspections, or clearing blockages in the discharge chute.
■ Disconnect the battery from the core if Yarbo will not be used for an extended period.
■ Regular Maintenance: Regularly inspect the blades, battery, motor, and other parts to ensure proper function and minimize the risk of malfunction.

## ⚠ Disclaimer

This safety guide is provided for general informational purposes. The operator is solely responsible for ensuring compliance with local laws, regulations, and safety standards. Yarbo disclaims all liability for injuries, damages, or losses arising from improper use, failure to follow these instructions, or failure to comply with applicable local laws and regulations.

# 2. Box Content Introduction

## 2.1 Box Content

### 2.1.1 Yarbo Core Box

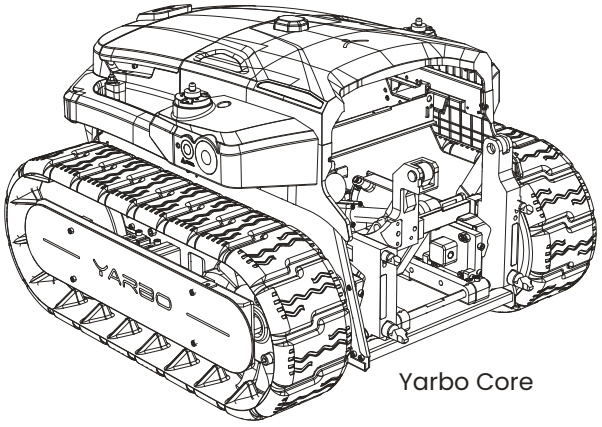

Yarbo Core



x2
High RTK Antenna Mount



x6
High RTK Antenna Mount Bolts



HaLow Antenna for Rover



x2
RTK Antenna for Rover



Allen Key #1



Allen Key #2



x2
Simple Wrench



Physical Controller & Controller Holder & Controller Power Adapter
(Located in the battery compartment)



Yarbo Core User Manual

### 2.1.2 Battery Box

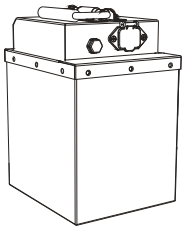

Battery

2. Introduction

## 2.1.3 Docking Station & Smart Assist Module Box

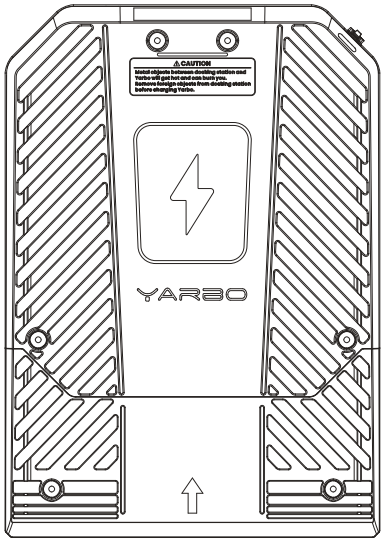


Docking Station Charging Unit



x12
Grass Pegs



Short Cable Ramp



Power Cable
for Docking Station



x12
Expansion Bolts
for Docking Station



2 meter Ethernet Cable



30 meter Ethernet Cable




Smart Assist Module




Data Center



Long Cable Ramp

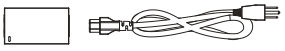

POE Power Adapter



Allen Key #3



Allen Key #4



Grass Pegs Screwdriver Head



x3

Grass Pegs for Mount



Battery Cover Wrench



x2

Anti-theft Screws for Battery Cover



L-Shaped Socket Wrench for Track



x20

Data Center Cable Clip



x7

Connection Bolts for Pole



x3

Wood Nails for Mount



Screwdriver Head for Wood Nails




Spare Screws



x3

Expansion Bolts for Mount



x1

T-joint Cap

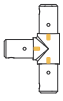

x1

T-joint of Data Center



Extension Pole of Data Center



Standard Pole of Data Center



x2

Tow Hitch Screws



Tow Hitch (Optional)



Track Wrench

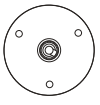

Data Center Mount

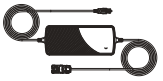

Wired Charger



x1

RTK Antenna for Data Center



Bluetooth Antenna for Data Center



HaLow Antenna for Data Center

# 2.2 Product Overview

## 2.2.1 Yarbo Core

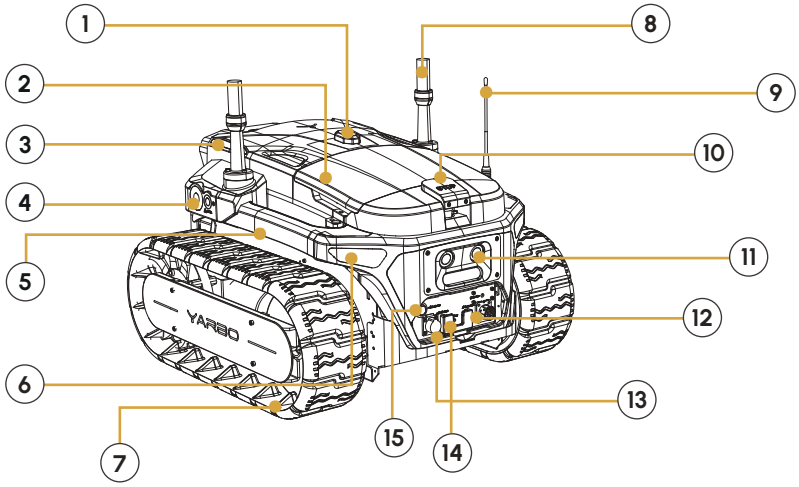


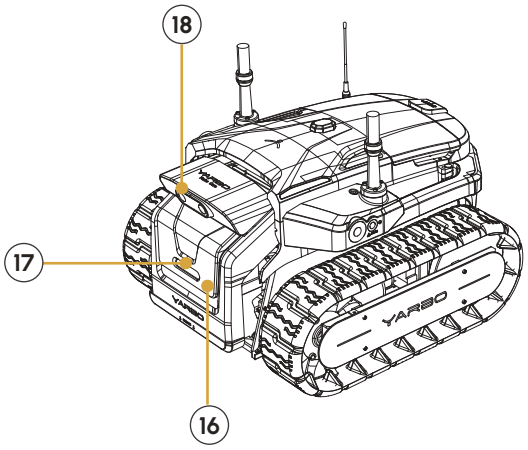


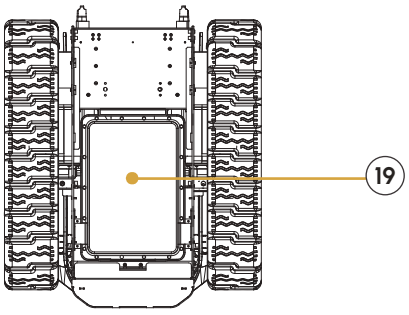


1. Warning Light
2. Battery Cabin
3. Indicator Light
4. Side Camera
5. Lifting Handle
6. Rear Lights
7. Track
8. RTK Antenna
9. HaLow Antenna
10. Emergency Button
11. Rear Comera
12. Module Connector
13. Wired Charging Port
14. Tow Hitch Mount
15. Activate Button
16. Smart Assist Module
17. Front Light
18. Front Binocular Camera
19. Wireless Charging Receiver

## 2.2.2 Data Center

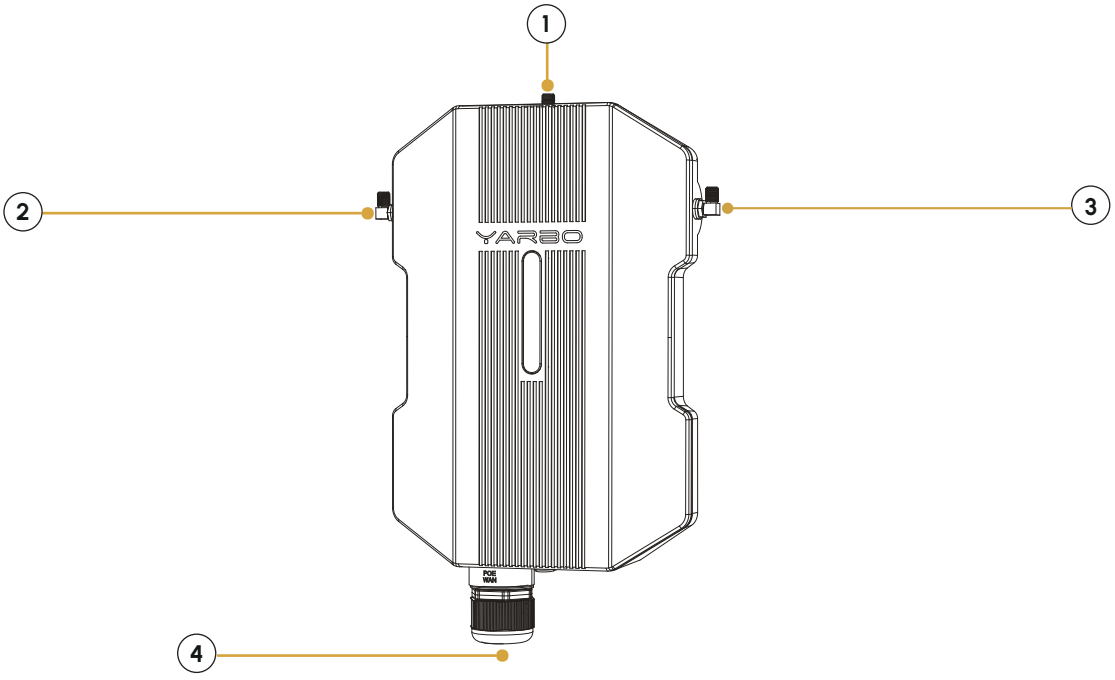


1 RTK Antenna Port

2 HaLow WiFi Antenna Port

3 Bluetooth Antenna Port

4 POE WAN Port

## 2.3 Status Indicators

### 2.3.1 Yarbo Core Headlight LED Status

The side-facing LED lights on Yarbo Core indicate real-time battery status.

| Visual | LED Color | Battery Level | Description |
|---|---|---|---|
| 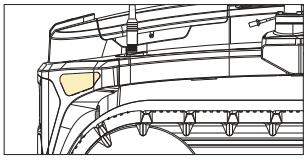 | White | 80-100% | Sufficient battery |
| 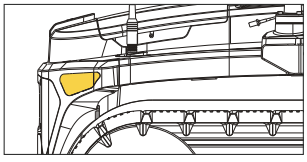 | Yellow | 20-80% | Medium battery |
| 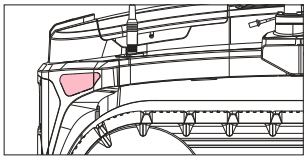 | Red | 0-20% | Low battery-recharge soon |

# 3. Setup Guide

## 3.1 Assembling Yarbo Core

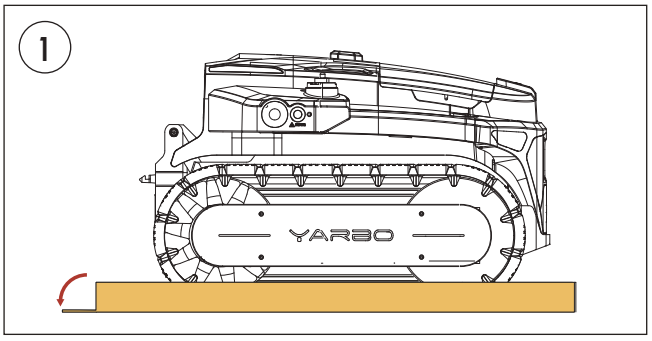


**Cut** the box along the cutting line on the bottom of the packaging box.

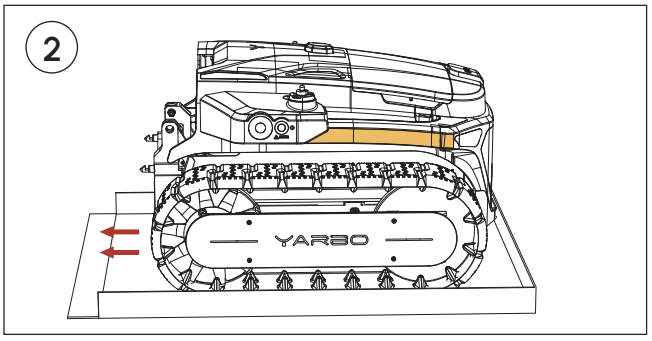


**Grasp** the lifting handles of the Yarbo Core and **push** the unit out of the packaging box.

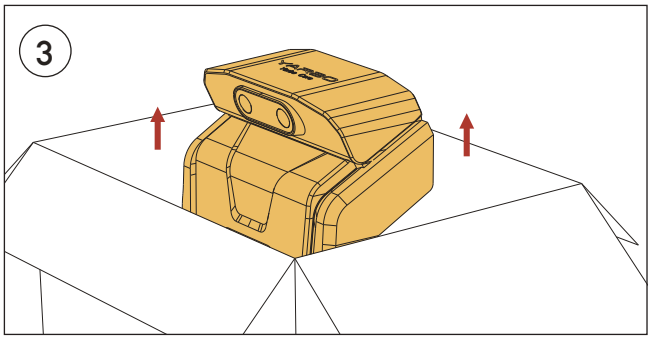


Take the Smart Assist Module out of the box.

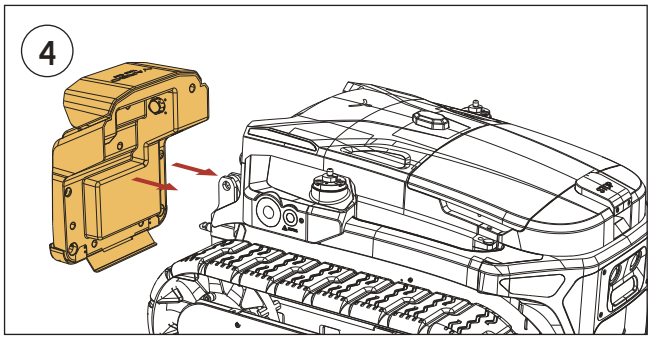


Bring the Smart Assist Module close to your Yarbo Core.

## 3. Setup Guide

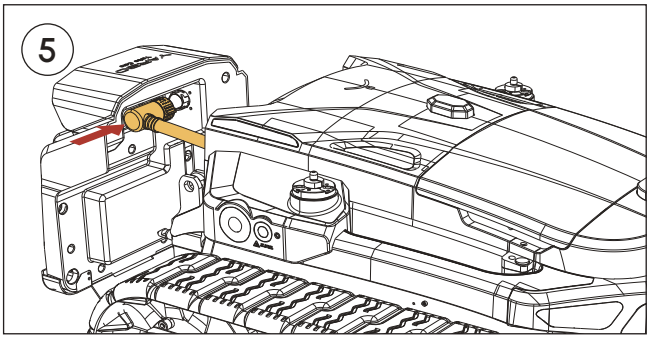


Gently connect the cable from the Smart Assits Module to Yarbo Core and push until it clicks and is firmly attached.

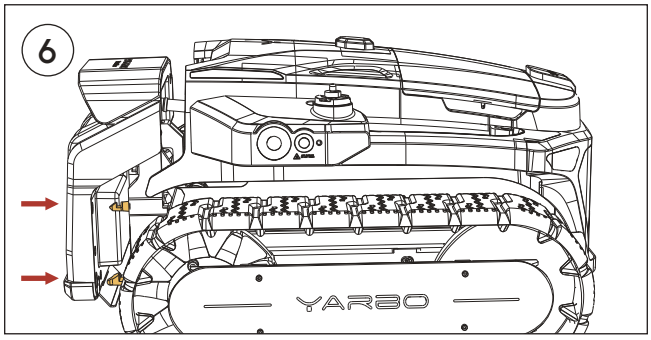


**Locate** the shafts and holes in the Yarbo Core and Smart Assist Module.
**Align** the Module with the Yarbo Core and gently push it into the shafts until you hear the click.

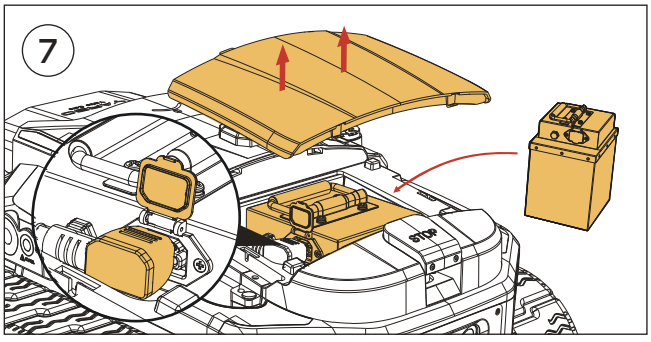


**Remove** the cover by grasping both sides with your hands and lifting. Place the battery inside the chamber and **connect** the cable from the Yarbo Core to the battery.

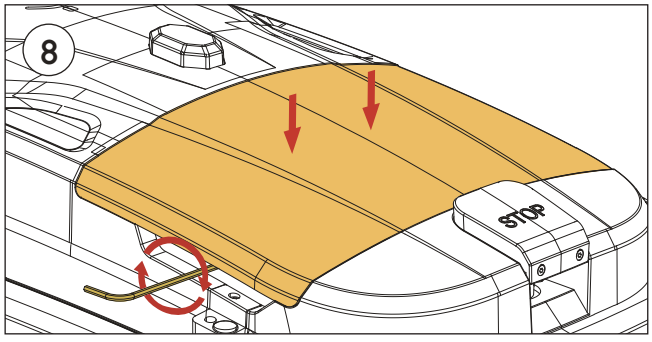


**Replace** the cover and **screw** the Anti-theft Bolts on both sides using Battery Cover Wrench provided in the package.

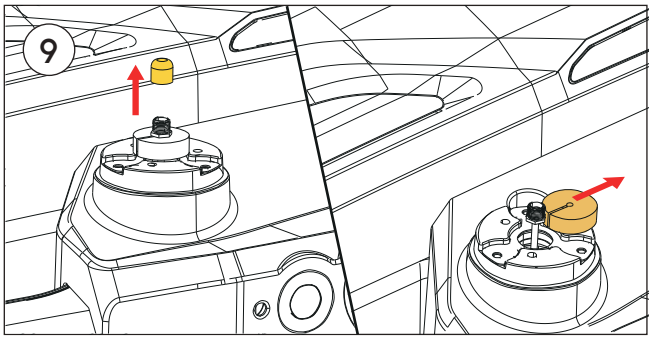


**Remove** the red screw cap and rubber rings on the RTK Antenna Mounts.

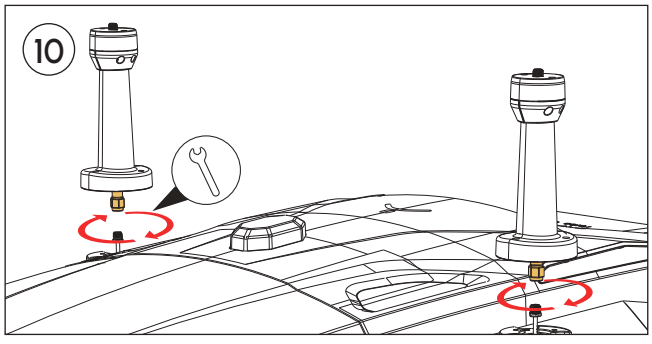


**Take** out the High RTK Antennas and align them with the connection shaft on Yarbo Core. Use the Simple Wrench to tighten them securely.

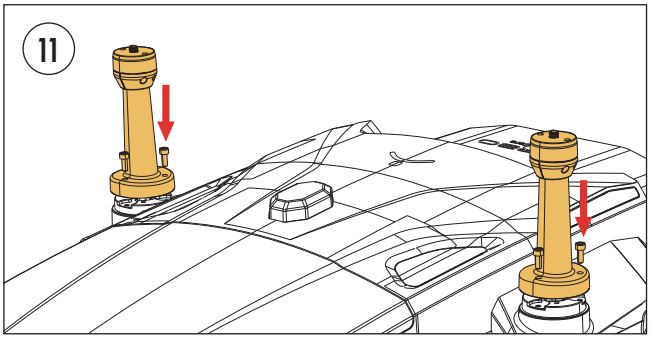


**Straighten** the RTK Antenna Mount. Insert the six RTK Antenna Mount Bolts provided in the package, and tighten them with Allen Key #2.

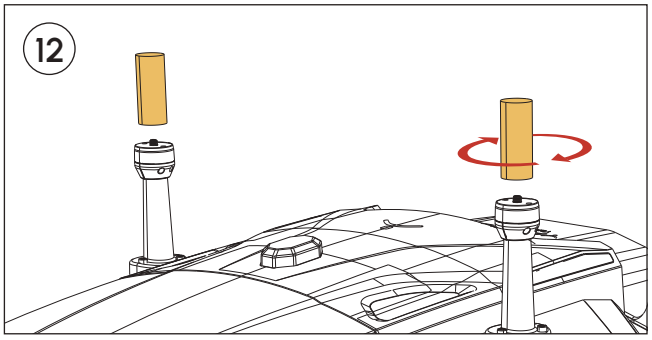


**Locate** the RTK Antenna for Rover and screw them on the RTK Antenna Mounts.

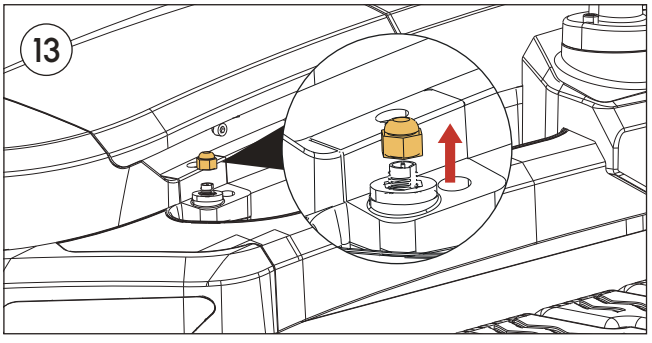


**Remove** the white screw cap on the HaLow Attenna Mount. Keep the black rubber ring on might be better for waterproofing.

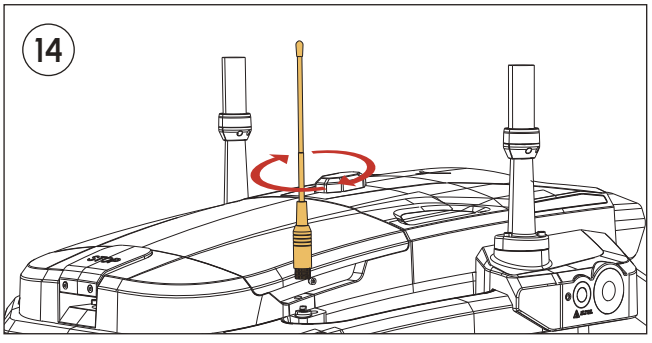


**Locate** the HaLow Antenna and screw the antenna into the HaLow Antenna Mount until hand tight.

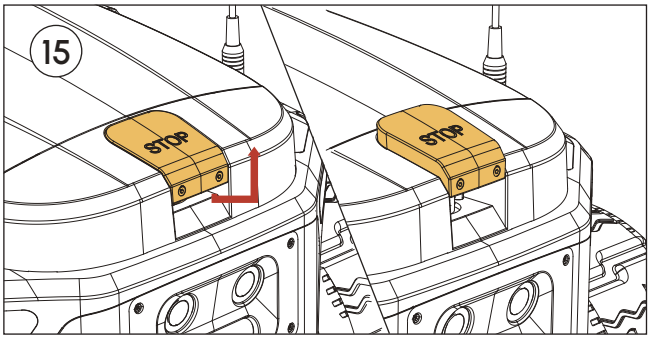


**Lift** the Emergency Stop Button.

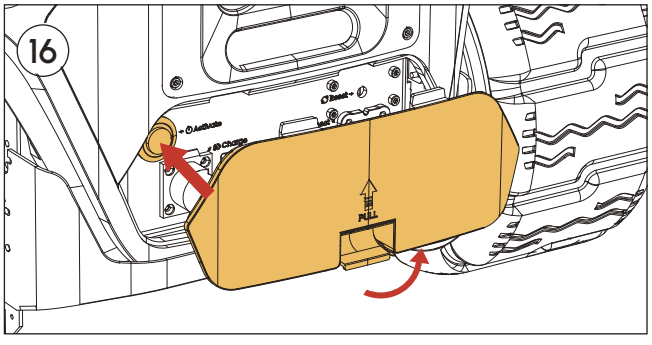


Remove the rear cover. Press the Activate Button to turn on Yarbo. Reinstall the rear cover. (For detailed instructions on how to turn off the machine, please refer to the Yarbo App)

## 3.2 Installing Yarbo App

The Yarbo App is a professional application that empowers you to manage and control your Yarbo anytime, anywhere, elevating your Core experience to new heights. With its impressive features, you can easily set up work schedules, define multiple working areas and no-go zones, and monitor Yarbo's operating status. Additionally, you can receive the latest firmware updates and access instruction manuals, video tutorials, FAQs, and more through the App.

**Follow these simple steps to install and set up the Yarbo App:**

① Download the Yarbo App by scanning the QR code below or searching on the app store.
② After installation, log in to your Yarbo account. If you don't have one, please register.
③ Follow the steps of the first-time user guide on the app. If there are few steps that are hard to understand, please refer to the app section of this user manual.

*Note: Once a device is associated with a Yarbo account, it cannot be linked to a new account. However, you can invite others to use your Yarbo through Yarbo Sharing in the app.

iOS

Available on the App Store

Android

GET IT ON Google Play

## 3.3 Installing Data Center

### Method 1 Roof and Wall Installation(Recommended)

Make sure there's a clear view of the sky with at least 120 Degrees of unobstructed space. The reason we recommend this method is that the higher the Data Center is placed, the more stable RTK signal it will receive.

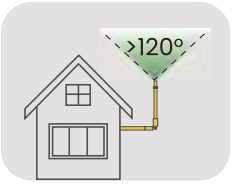


### Method 2 Ground Installation

Make sure there's a clear view of the sky with at least 120 Degrees of unobstructed space.




**⚠ CAUTION**

- Please read through all the following installation methods, and make sure you understand how to use required tools before installation.

**⚠ NOTICE**

- The most important thing for installing the Data Center is to ensure that the Data Center has a 120° unobstructed view of the sky. Please choose the most suitable method for your home. Additionally, the Data Center requires a wired network connection (A 30-metre-long Ethernet cable is provided), so it is necessary to find a location where the Data Center is not too far from the router in your house and has a 120° unobstructed view of the sky.

## 3.3.1 Installation Preparation

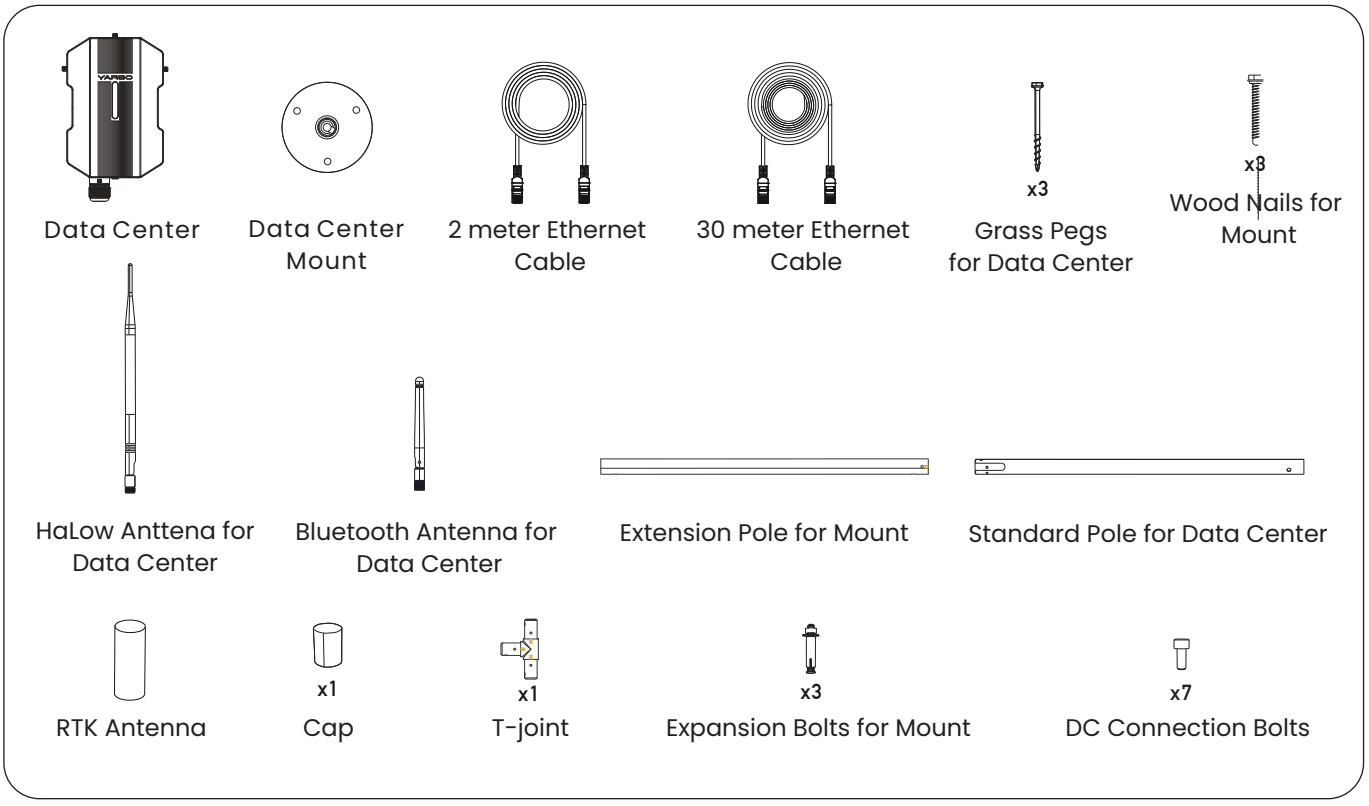


### ⚠ WARNING

- Given the recommendation to install the Data Center at the top of a house, it is crucial to implement comprehensive lightning protection measures to safeguard against potential damage caused by lightning strikes. In areas where lightning activity is frequent, the risk of such damage increases significantly. We strongly advise those residing in high-lightning-activity regions to buy a grounding cable. This critical component allows for the safe dissipation of excess electrical current into the earth, minimizing the risk of Data Center damage.
- Recommend consultation with a licensed electrician to install proper grounding. Use 6AWG to 10AWG grounding cable per your local codes.

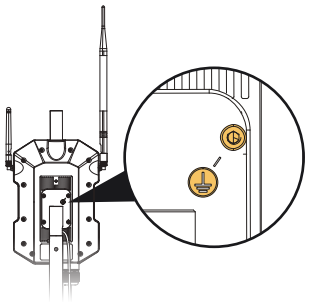

### 3.3.2 Data Center Installation

**NOTICE**

- Please make sure that the place you choose for insatallation has a clear of the sky with at least 120 Degrees of unobstructed space.

**Method 1** **Roof and Wall Installation**

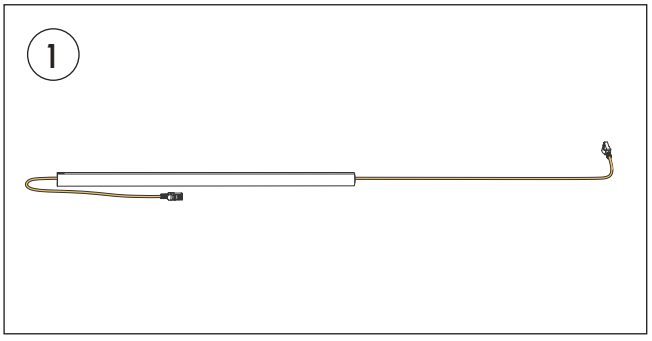


**Locate** the 30m Ethernet Cable and extension pole provided in the Yarbo Core box. **Thread** the Ethernet cable through the extension pole.

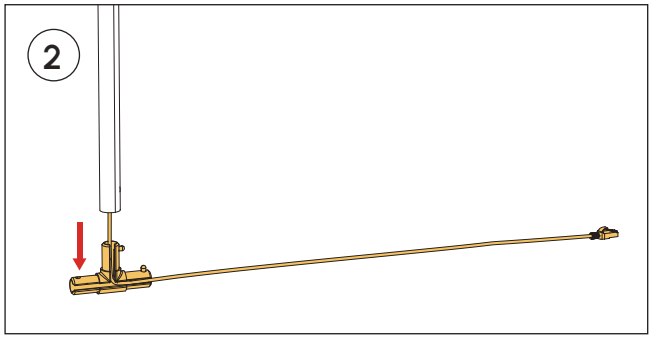


**Press** the cable into the crevice of the T-joint as shown in the picture. **Connect** the Extension Pole to the T-joint by pressing the round button on the T-joint and aligning this button with the hole in the Extension Pole.

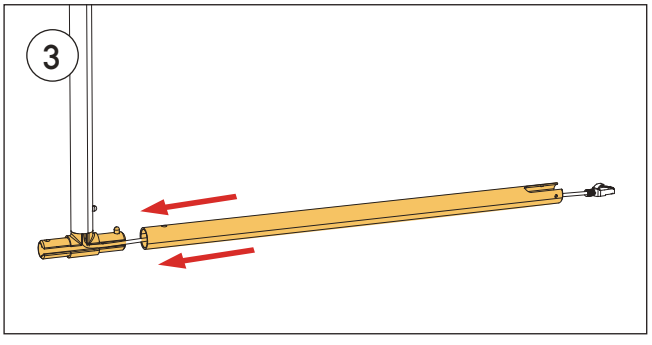


**Press** the round button on the T-joint and **align** it with the hole in the Standard Pole to connect two parts and secure the connection.

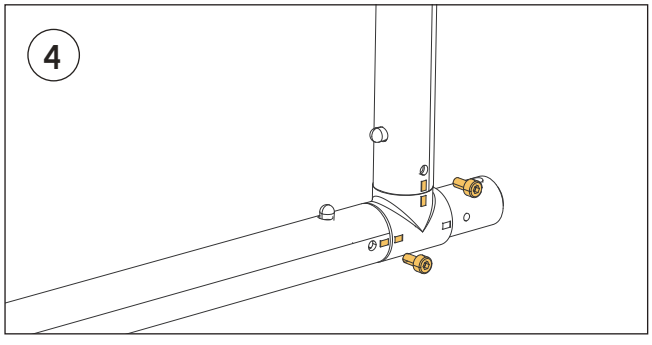


**Screw** the two Connection Bolts into the holes provided to stabilize the T-joint, Standard Pole and Extension Pole.

## 3. Setup Guide

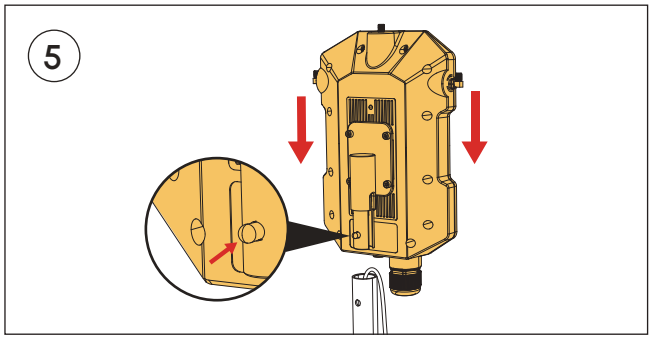


**Connect the** Data Center to the Extension pole (press the small button on the Data Center and align this button with the hole in the pole). **Pull out** a small section of the cable to ensure it can reach and connect to the Ethernet POE WAN port.

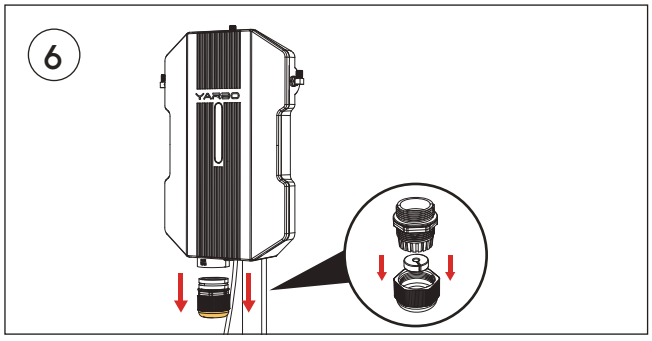


Carefully **unscrew** the entire gland set on the WAN port of the Data Center. **Remove** the gland cover and **push out** the black rubber plug.

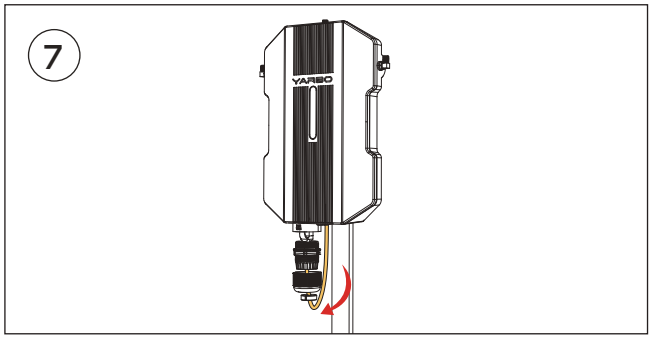


**Thread** the Ethernet Cable through the gland and its cover. **Locate** the opening of the black rubber plug and **snap** it onto the Ethernet Cable.

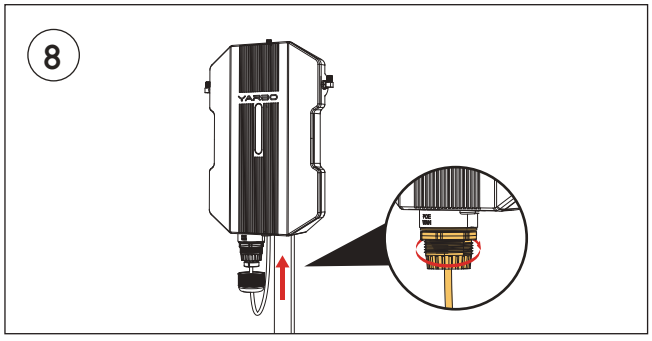


**Connect** the Ethernet Cable to the WAN port and **tighten** the gland by screwing it in.

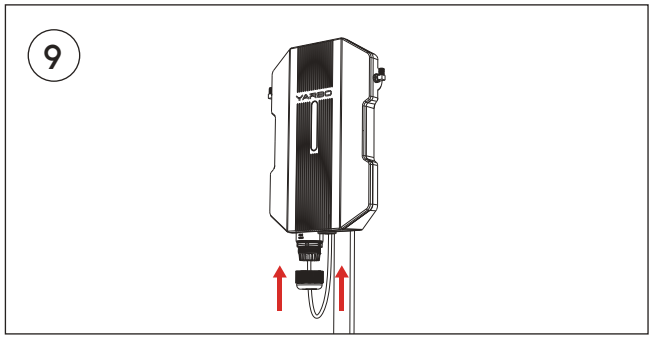


**Push** the black rubber plug into the gland.

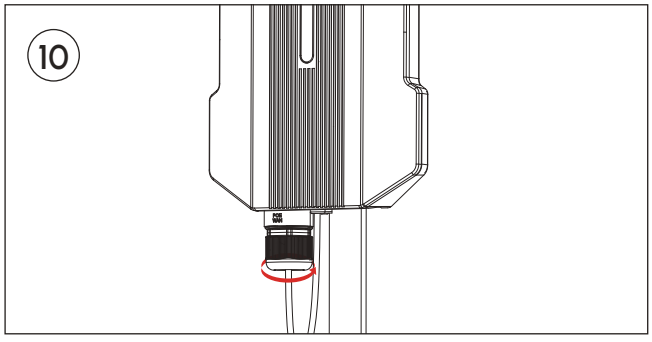


**Screw** and **tighten** the cover of the gland.

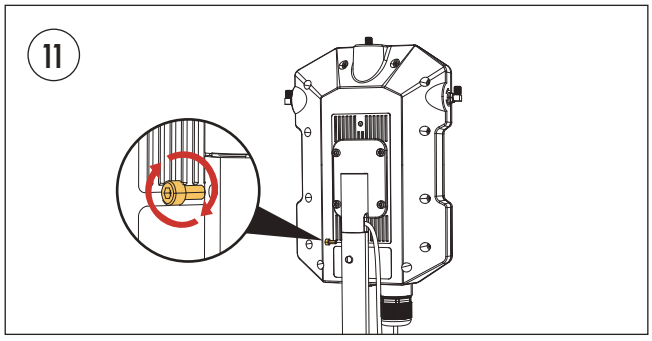


**Screw** in the connection bolt to fasten the Data Center to the Extension Pole.

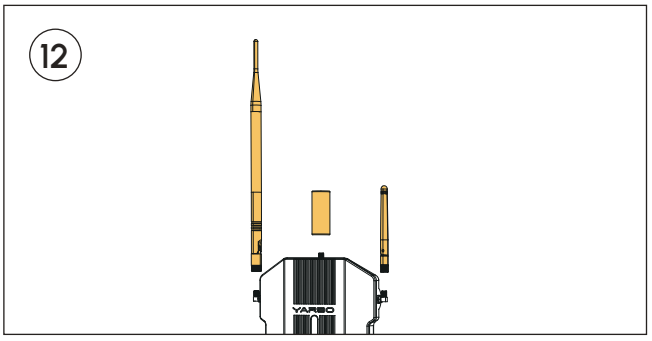


**Locate** the three antennas provided in the attach them as shown and securely **tighten** them.

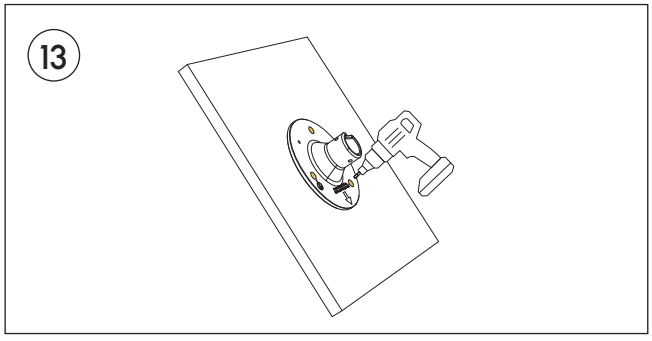


**Position** the mount at the chosen installation site and follow the proper instructions (**BELOW**) for the surface you are mounting the base to.

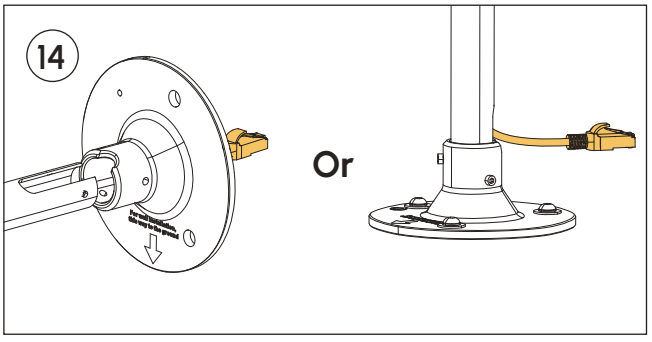


**Thread** the Ethernet Cable through the middle hole of the mount, or **pull out** the Ethernet Cable through the opening or gap in the pole carefully.

## NOTICE

- If it is impossible to drill through the wall or other hard material, the cable can be dragged out from the side of the mount.
- When using the middle hole for cable routing, sealant must be applied around the hole to prevent water, insects, or dust from entering the home.

## 3. Setup Guide

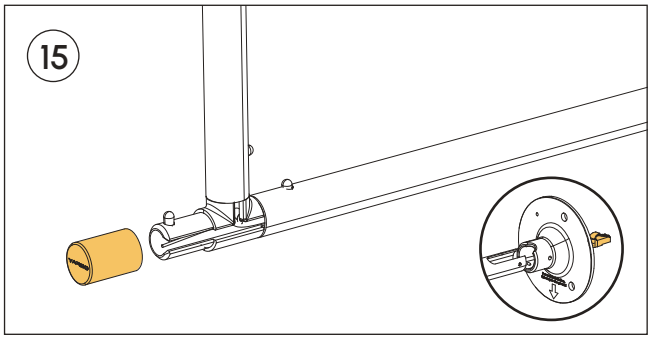


**Attach** the cap securely to the side of the T-joint.

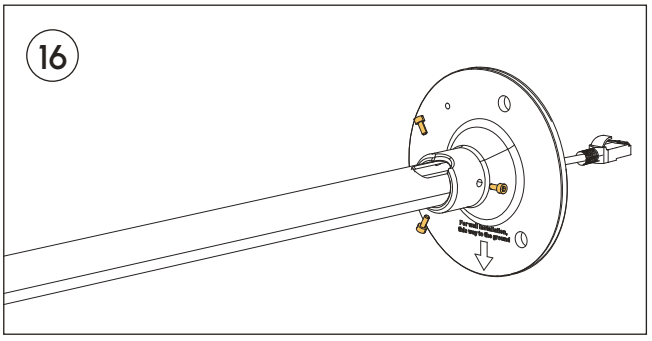


**Screw** in three Connection Bolts for Pole to stablize the mount and Standard Pole.

**If you are threading the cat5 cable through the pole you will need to mark the position of the center hole in the mounting base and drill a ¾ inch or 19mm hole to insert the cat5 cable through.**

| | |
|---|---|
| **Wooden surface** | Predrill the three outer holes using a ¼ inch or 6mm drill for the wood screws used to mount the base. |
| **Cement, brick, mortar** | Predrill the three outer holes using a 2/5 inch or 10mm drill for the anchor bolts used to mount the base. |
| **Lawn** | Anchor the base using three lawn screws using the lawn screw driver bit included. |

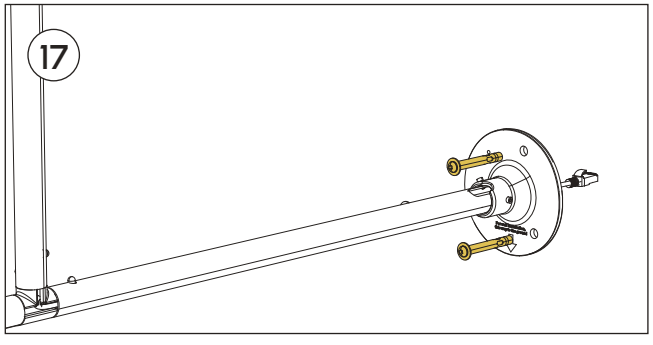


**Secure** the mount by fastening the three Connection Bolts (**As described above**) needed for your installation surface.

**⚠ WARNING**

- When installing the Data Center Set on the roof, exercise extreme caution. Ensure compliance with local regulations regarding working at heights and always use appropriate safety equipment.

**NOTICE**

- Please make sure that the place you choose for insatallation has a clear of the sky with at least 120 Degrees of unobstructed space.

## Method 2 Ground Installation

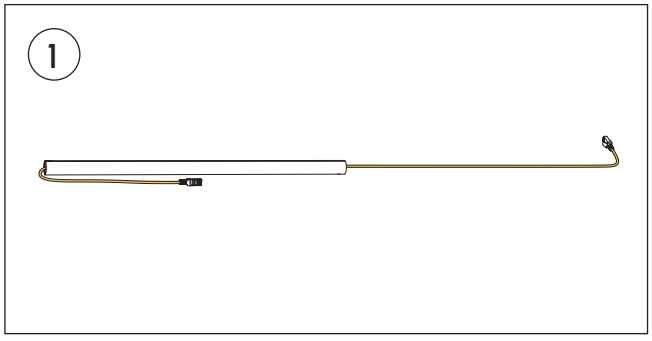


**Locate** the Ethernet Cable and extension pole provided in the Yarbo Core box.
**Thread** the Ethernet Cable through the Extension Pole.

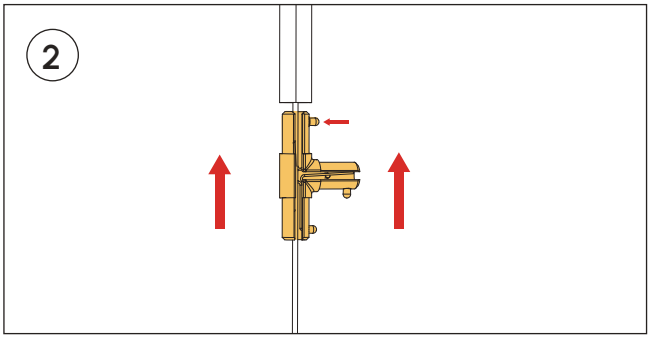


**Insert** the cable into the groove of the T-joint as shown in the picture.
To connect the Extension Pole, **press** the round button on the T-joint and align it with the corresponding hole on the Extension Pole until it clicks into place.

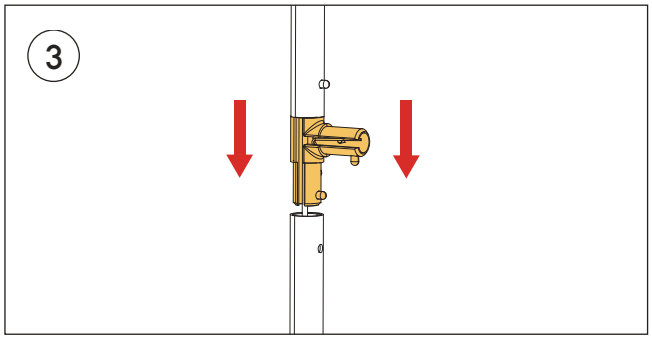


**Press** the round button on the T-joint and **align** it with the hole in the Standard Pole to connect two parts and secure the connection.

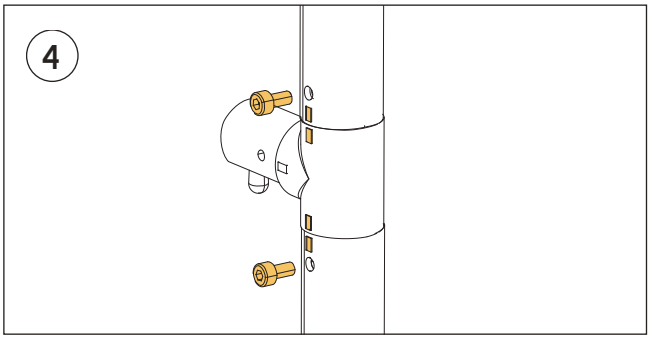


**Screw** the two Connection Bolts into the holes provided to stabilize the T-joint, Standard Pole and Extension Pole.

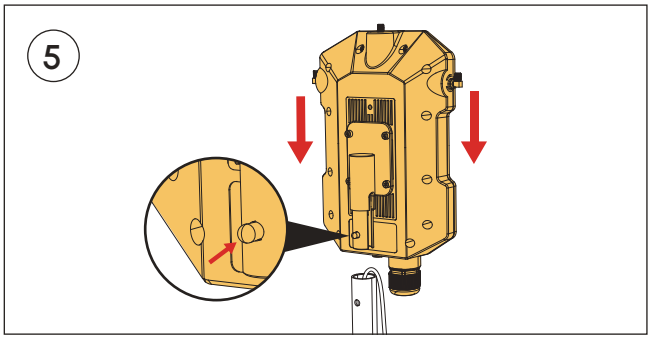


**Connect** the Data Center to the Extension pole (press the small button on the Data Center and align this button with the hole in the pole). **Pull out** a small section of the cable to ensure it can reach and connect to the Ethernet POE WAN port.

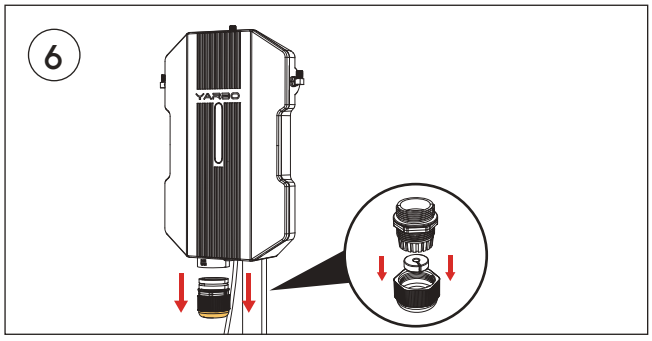


Carefully **unscrew** the entire gland set located on the WAN port of the Data Center. **Remove** the gland cover and **push out** the black rubber plug.

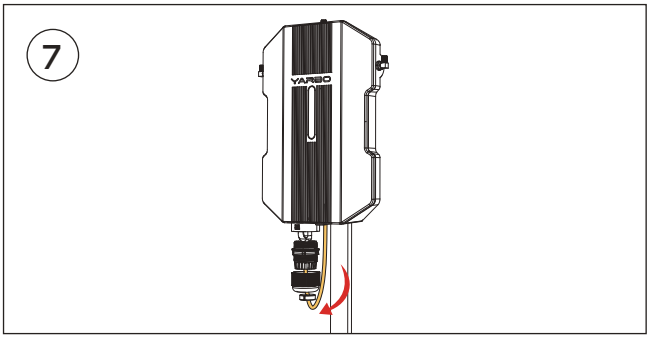


**Thread** the Ethernet Cable through the gland and its cover. **Locate** the opening of the black rubber plug and **snap** it onto the Ethernet Cable.

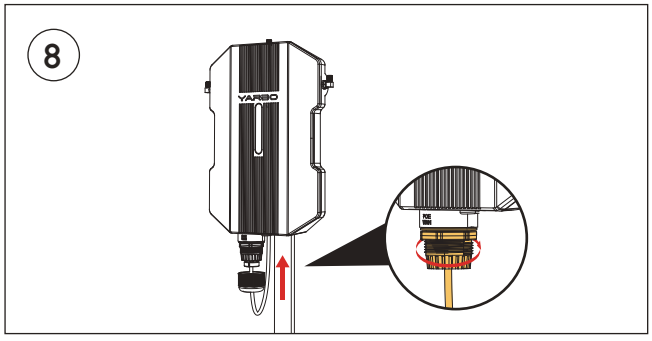


**Connect** the Ethernet Cable to the WAN port and **tighten** the gland by screwing it in.

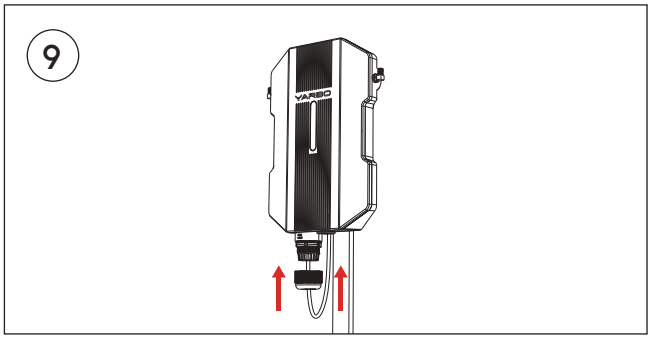


**Push** the black rubber plug into the gland.

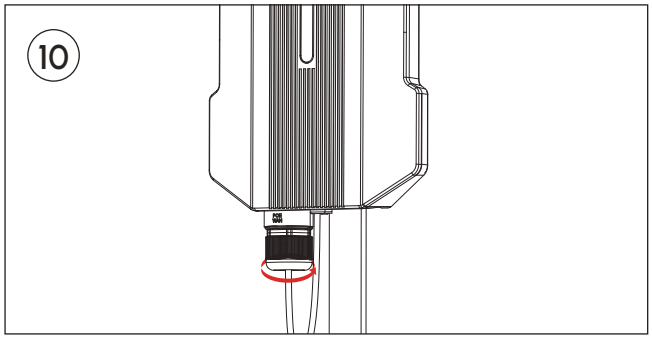


**Screw** and **tighten** the cover of the gland.

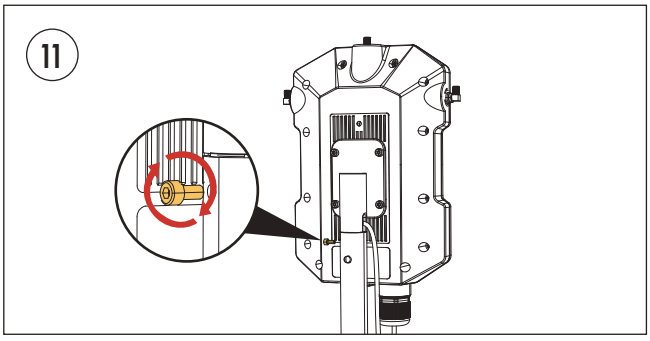


**Screw** in the connection bolt to fasten the Data Center to the Extension Pole.

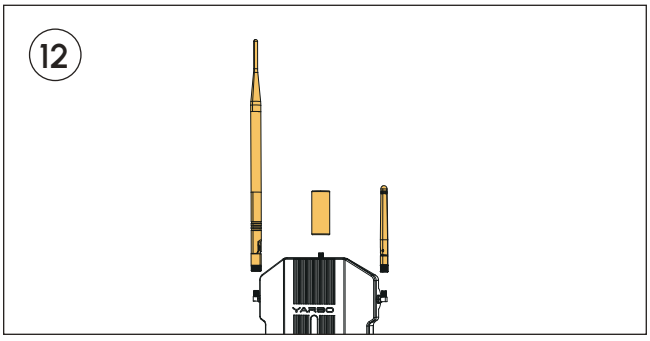


**Locate** the three antennas provided in the Yarbo Core box and attach them as shown and securely **tighten** them.

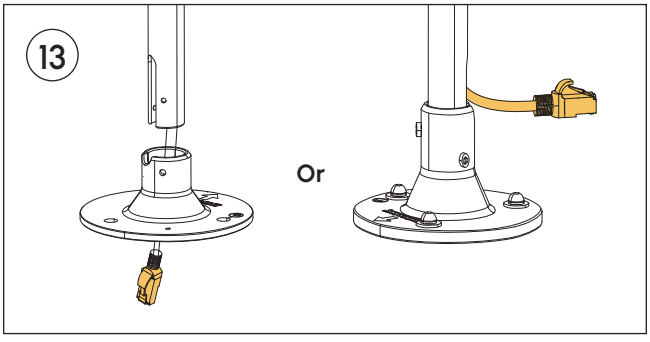


**Thread** the Ethernet Cable through the middle hole of the mount, or **pull out** the Ethernet Cable through the opening or gap in the pole carefully.

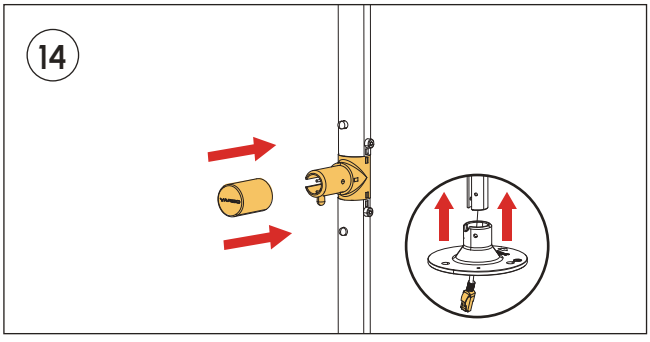


**Attach** the cap securely to the side of the T-joint.

## NOTICE

- If it is impossible to drill through the wall or other hard material, the ethernet cable can be dragged out from the side of the mount.
- When using the middle hole for cable routing, sealant must be applied around the hole to prevent water, insects, or dust from entering the home.

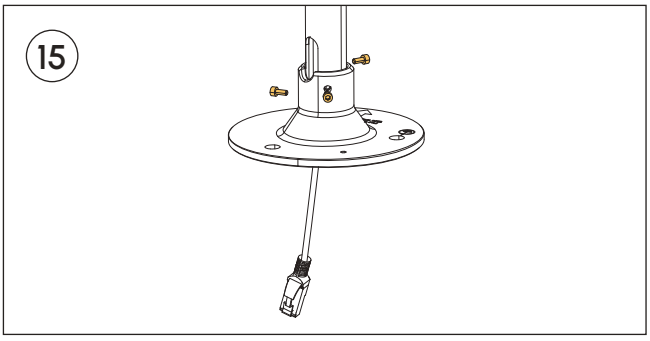


**Screw** in three connection bolts for pole to stablize the mount and Standard Pole.

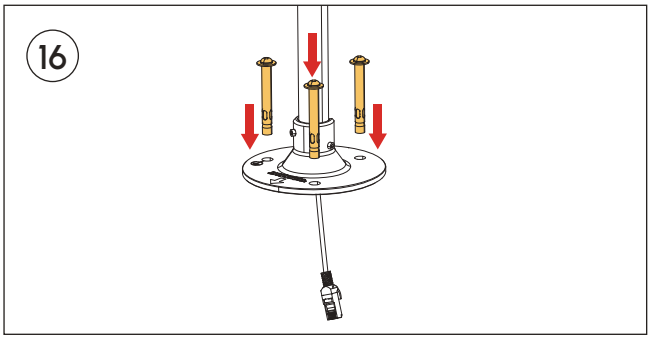


**Secure** the mount by fastening the three Connection Bolts (**As described above**) needed for your installation surface.

**WARNING**

- When installing the Data Center on the roof, exercise extreme caution. Ensure compliance with local regulations regarding working at heights and always use appropriate safety equipment.

### 3.3.3 Ethernet Cable Connection

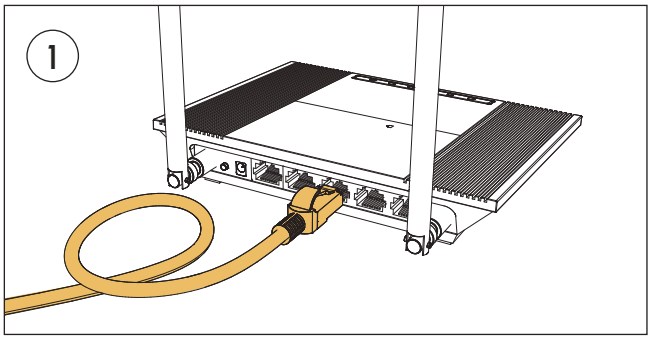


**Locate** the 2-meter long Ethernet Cable and the POE power adapter provided in the Yarbo Core Box, and **connect** one end of the Ethernet Cable to the LAN port on the router.

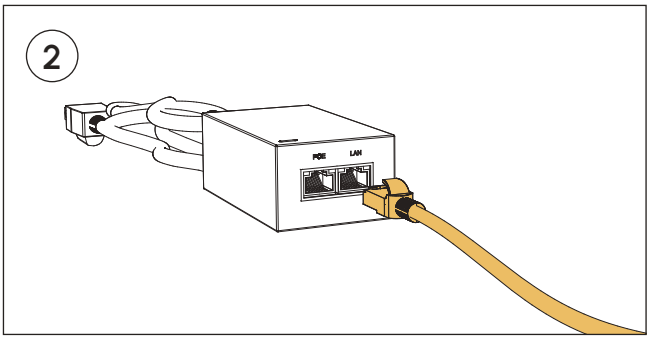


**Connect** the other side of the Ethernet cable to the LAN port of POE power adapter.

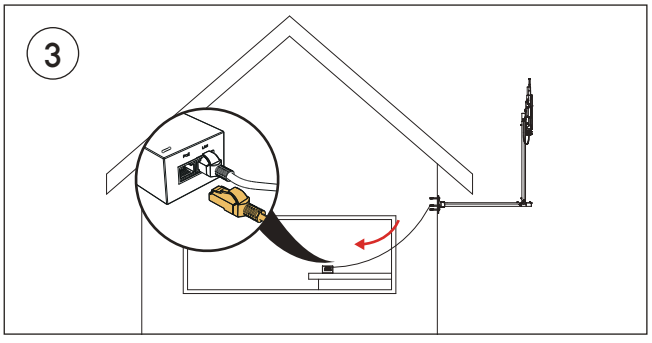


**Pull out** the 30-meter Ethernet Cable that has been fed in from the Data Center setup. Connect one end to the POE port of the POE power adapter. The other end should already be connected to the WAN port of the Data Center.

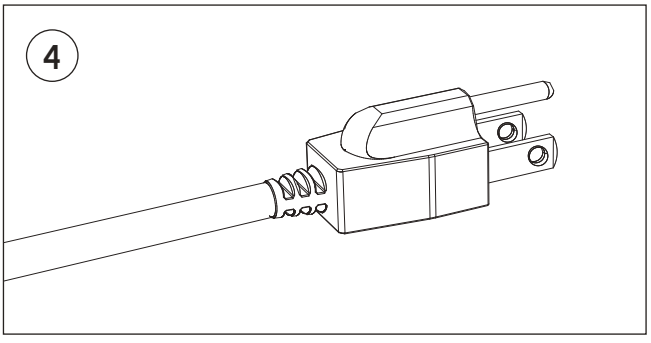


**Connect** the power cord to the POE adapter and insert the plug of the power cord into an electrical outlet.

**⚠ WARNING**

- The POE power adapter is not waterproof. Please install it indoors to avoid damage.

### 3.3.4 Data Center Signal Lights

| LED Indicator | Status | Description | Remarks |
|---|---|---|---|
| Solid Green | Normal | Normal RTK Signal<br> | / |
| Flashing Red | 1. RTK Signal Abnormal<br>2. DC has moved | No RTK Signal | The flashing red light during the first installation of the Data Center is normal. Please follow the new user guide in the APP to complete the process (this step can be skipped if you have already completed it). |
| Flashing Blue | Pairing Mode | Pairing mode activated | / |
| Solid Blue | Pairing Successful | Pairing is successful | / |
| Solid Yellow | Survey Mode | DC is in address selection mode | / |

**NOTICE**

- This appliance can be used by children aged from 8 years and above and persons with reduced physical,sensory or mental capabilities or lack of experience and knowledge if they have been given supervision or instruction concerning use of the appliance in a safe way and understand the hazards involved;
- Children shall not play with the appliance;
- Cleaning and user maintenance shall not be made by children without supervision;

**WARNING**

- For the purposes of recharging the battery, only use the detachable wired power supply unit provided with this appliance.

## 3.4 Installing Docking Station

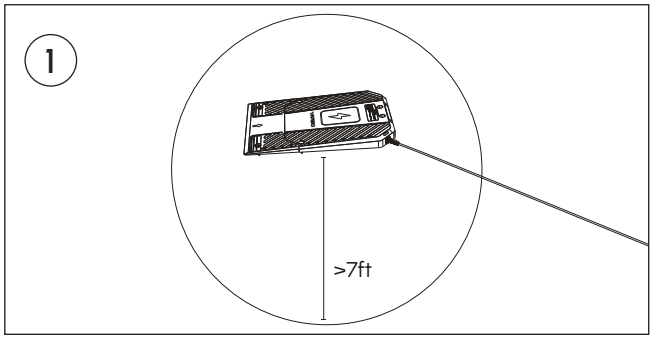


Ensure the Docking Station location has **7 ft** of clearance and at least a **120 degree** clear view of the sky. Avoid placing near buildings or trees. Make sure Yarbo has been initialized in the app before proceeding.

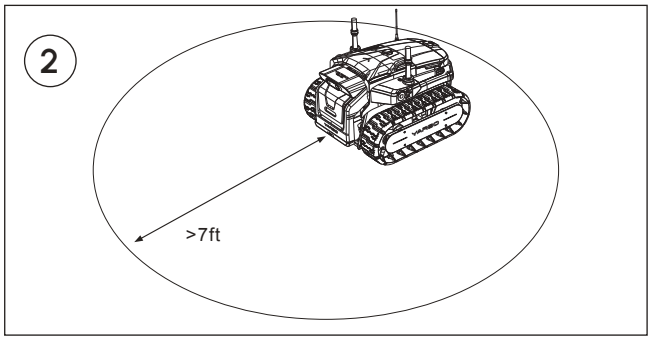


**Drive** Yarbo to the desired location for the Docking Station to test if there is strong GPS signal. Once Yarbo reaches a position with a strong GPS and network connection, the app will notify you.

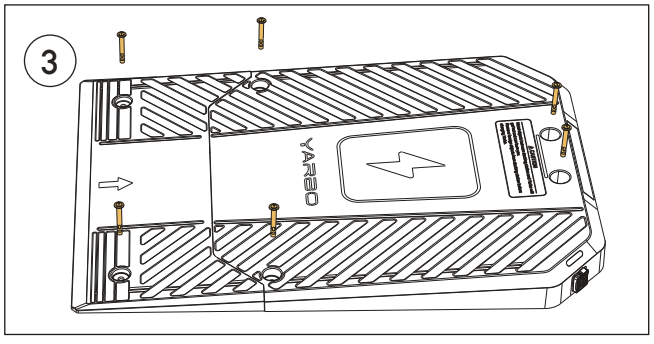


**Place** the Docking Station in the desired location. Secure the Docking Station by suitable methods. For soil/grass surface, use grass pegs. For concrete/brick surfaces, use expansion bolts. Grass pegs and expansion bolts are provided in the package.

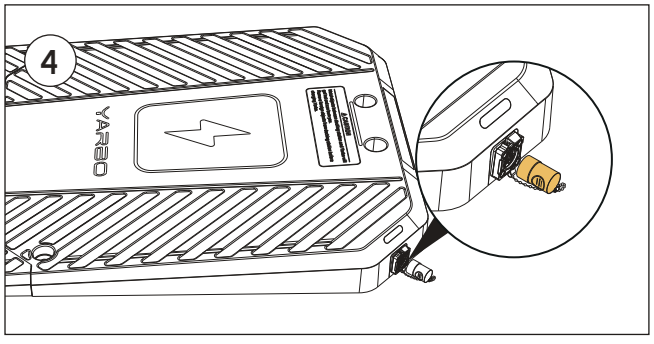


**Press** the snap and **remove** the cover.

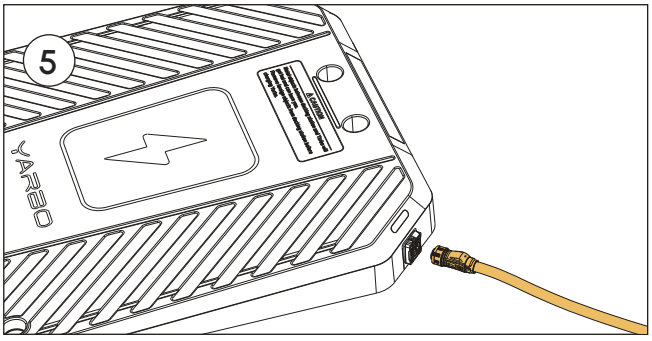


**Connect** the Power Cable to the port in the docking station.

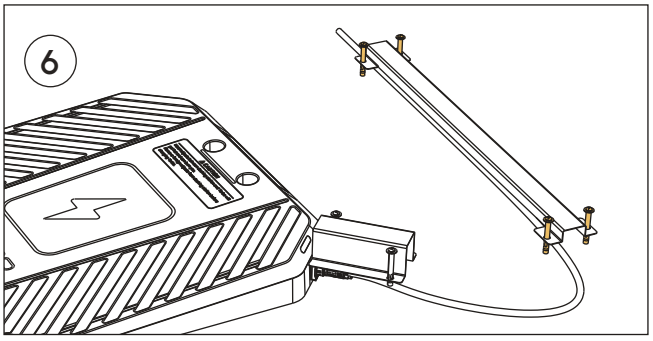


**Place** the Short Cable Ramp near the port and the Long Cable Ramp on the Power Cable. **Secure** the Cable Ramp by suitable methods.

### NOTICE

- For safety protection, please correctly install the cable ramps and thoroughly inspect their stability, ensuring that there is no excessive compression or twisting between cable ramps and cables.
- Grass Pegs are recommended for soil or grass surface, and Expansion Bolts are recommended for For concrete or brick surface.

APP Tutorial

# 4. Yarbo APP Features

Before using the Yarbo App, we recommend taking a few moments to read through this user manual. The app plays a key role in operating your Yarbo device, so understanding its features and how it works is essential for a smooth experience. If you haven't downloaded the app yet, please refer to Section 3.1.

## 4.1 Features Statement

### 1.Mapping

The mapping function is tailored for users to create a detailed map of the area where Yarbo to operate. Normally, A map encompass the docking station, pathways, woking areas, no-go zones. With the map, Yarbo can design its route through intelligent algorithm and execute the work plan depending on the personal schedule. The provided picture serves as an example of the map, showing two designated working areas, one No-go Zone, two Pathways and a docking station.

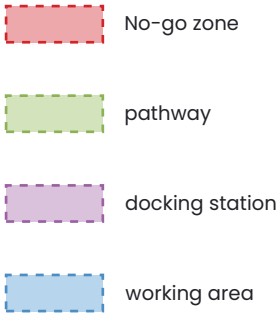


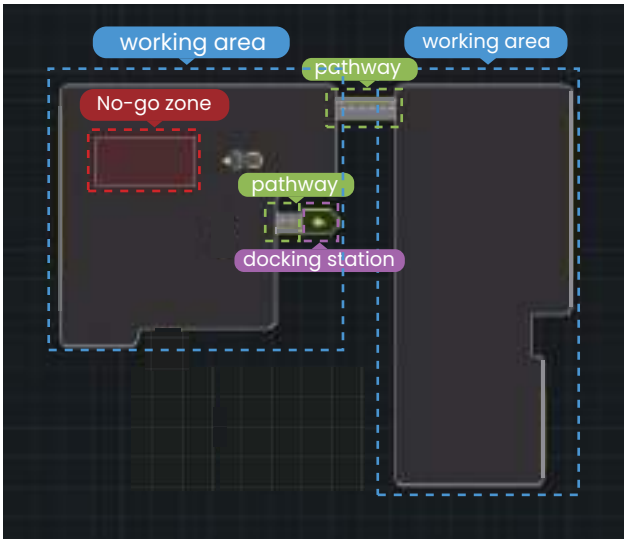

# 4. Yarbo APP Features

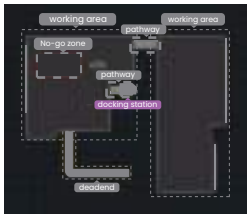


## ① Docking Station serves two purposes:

1. Charging Station – Marked by a green battery icon on the map.
2. Work Plan Starting Point – The designated location where Yarbo begins its tasks. If you need to move the docking station, update its position on the map by clicking "Reinstall Docking Station" on the Yarbo Settings page.

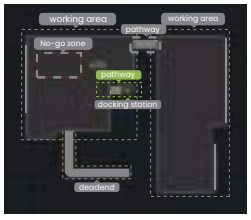


## ② Pathway:

A pathway is designed to be a narrow lane that connects the two elements. A pathway can connect the docking station and the working area. At the same time, it can also connect two working areas shown in the map.

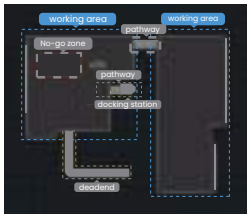


## ③ Working Area:

The working area refers to an enclosed zone where Yarbo performs operations. While the entire map requires at least one working area connected to the docking station, additional working areas may be added and connected via pathways. To define a working area, simply drive Yarbo along the desired perimeter - the system will automatically recognize the boundary and handle all navigation routing. Each working area must maintain a fully enclosed boundary for proper operation.

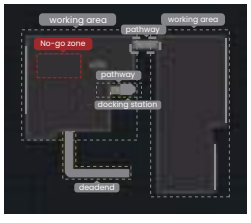


## ④ No-go Zone:

The "No-go zone" refers to enclosed areas within the working area where you do not want Yarbo to enter. Typically, these areas include the swimming pool, flower beds, restricted areas, and large obstacles that may obstruct Yarbo's normal operation. Although the Yarbo M1, SAM, and Blower can detect and avoid obstacles, drawing the no-go zone in advance can save time during operating.

## 4.2 Remote Control

### 4.2.1 Camera View

The binocular camera positioned at the front and rear of the Yarbo core plays a vital role in its visual algorithm and brings you to the next level of wire-free experience. This kind of camera is similar to human eyes, equipped with two cameras that can capture two images with disparity, enabling depth measurement, obstacle recognition, and precise positioning.
Moreover, the high-performance CMOS cutting-edge manufacturing tech guarantees high dynamic imaging capability and the ultra-wide field of view ensures adaptability to challenging scenarios, minimizing the effects of complex lighting conditions on recognition algorithms.

You can view the camera feed in the Yarbo App under Settings > SmartVision.

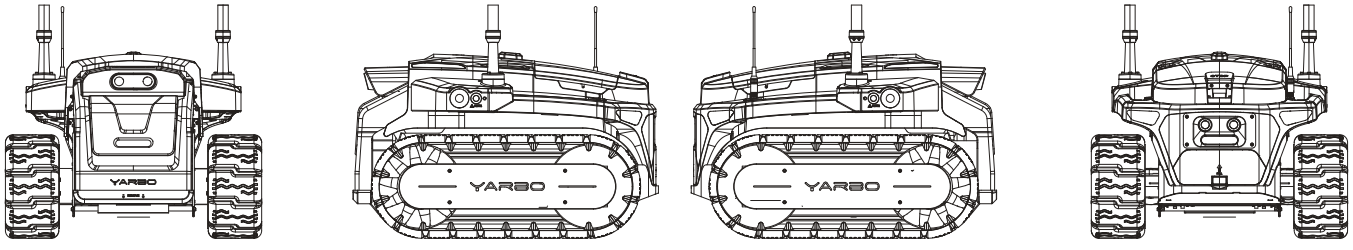

### 4.2.2 Anywhere Control

The remote control allows you to control your Yarbo anywhere, anytime, without a distance limit. Real-time image viewing could be achieved through the Data Center connection, which achieves low power consumption and low latency, and image transmission technology to reach long-distance communication and remote control functions via the App.



## 4.3 Intelligent Towing

The intelligent towing could be applied through a tow hitch with a strong grip on the track and the driving motor to implement fine parking and spot-to-spot functions. Fine parking function requires a physical controller to control heavy objects under 500lbs to park in a specific position, while spot-to-spot transportation could berealised by drawing a route on the Yarbo app through the additionalsupport module and the different sizes of trays to carry stuff (up to 15kg) like water, ingredients, camping items, etc.



## 4.4 Auto Patrol

The auto patrol using RTK GPS and public network communication enhances your yard's security 24/7 by identifying intruders, sending immediate alerts, and offering access to a live feed for real-time monitoring. Users could customise the patrol schedule and alarm degree, the abnormal state and location information of the core.



## 4.5 Follow Me

The 'follow me' function using a visual algorithm to realise human posture recognition and measure distance, allows Yarbo core to intelligently follow users with tow hitch or any yard modules they need without pushing or carrying tools.



# 5. Physical Controller Instruction

Physical controller is an alternative method for controlling Yarbo. This section aims to provide basic instructions for operating the Yarbo using the physical controller.

## 5.1 Button Introduction:

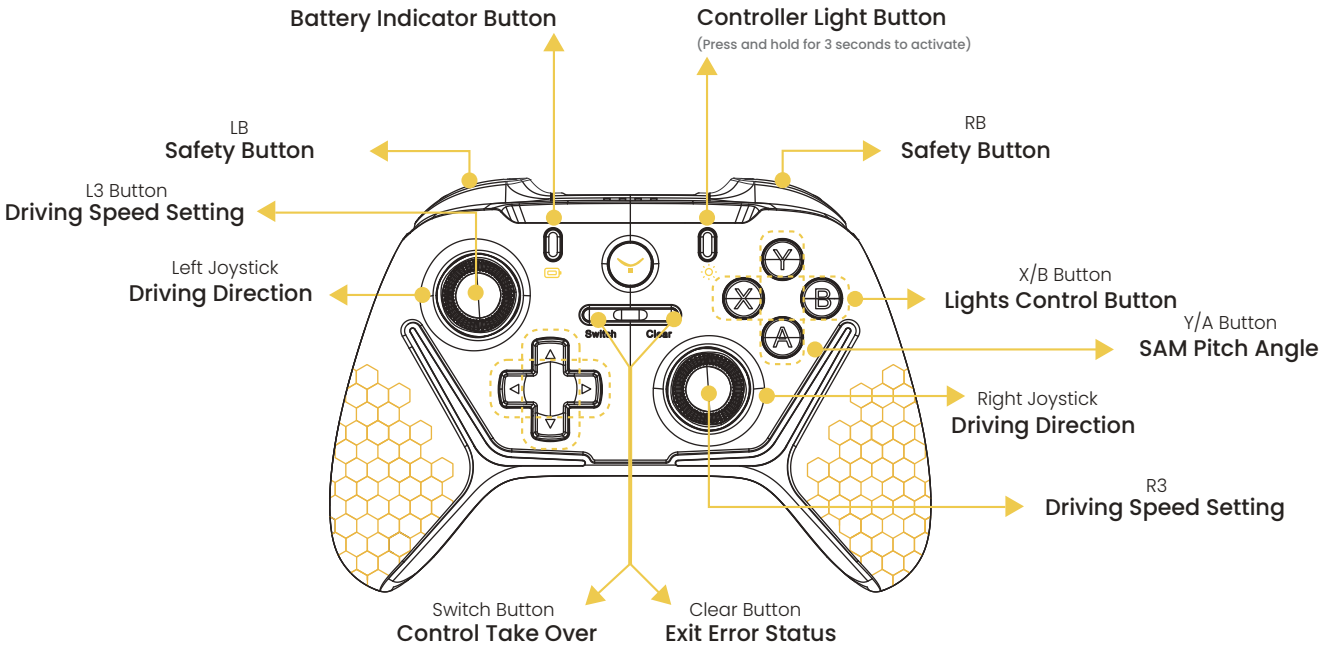


**WARNING**

- DO NOT operate Yarbo when the controller is exposed to an ambient temperature higher than 45℃ or lower than -25℃.

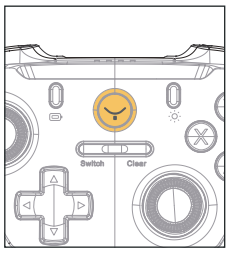

### Yarbo Logo Button:

Logo button can be used to power on or off the controller. To power on the controller, short press the **Logo button for 1 second**. To power off, press the **Logo buttons for 3 seconds**. If the controller is not in use, it will automatically power off after 5 minutes.

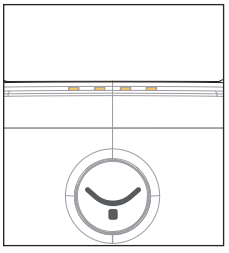

### Battery Level

Press the Battery Indicator Button (refer to the picture on the next page) to check the battery level of the controller. The four LED lights on the top of the controller indicate the battery status.

| | |
|---|---|
| | Light 1 stays on indicates battery level is 1%-25%. |
| | Lights 1 and 2 stay on indicates battery level is 26%-50%. |
| | Lights 1, 2, and 3 stay on indicates battery level is 51%-75%. |
| | All lights (1, 2, 3, and 4) stay on indicates handle battery level is 76%-100%. |

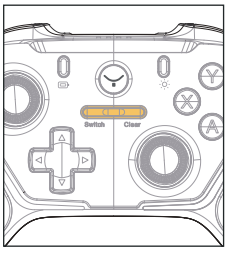

### Switch & Clear Button:

Long press the switch button for 2 seconds to take over the control authority. Once the physical controller gains authority, the users can operate the Core.

Short press the switch or clear button to exit the error mode. When Yarbo encounters the dangers or stuck by any obstacles, it will stop and enters the error mode. After the dangers are cleared, pressed the start or clear button to exit the error mode.

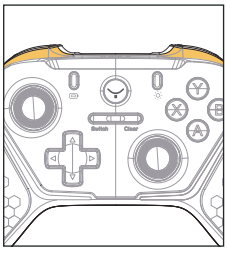

### LB & RB (Safety button):

LB & RB are designed as safety button, which means that one of the buttons should be pressed throughout most of the operation that may cause dangerous result. Except for the X/A/B/Y buttons and D-pads, the rest of the function buttons must be pressed with the safety button to execute their own functions.

***Hold the RB button down when operating the rover***

## 5. Physical Controller Instruction



**Left Joystick and Right Joystick:**

These two joysticks control the direction of movement and speed of the robot. Press the safety button RB and rotate the stick around to control Yarbo's movement in any direction. Press the left and right stick vertically down to switch between two-speed settings (L3, R3 button).

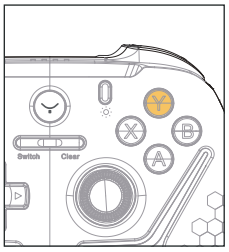

**Y Button:**

This button tilts the module pitch up. Press and hold to continuously raise the pitch until it reaches its highest position. Release to stop at the current angle.

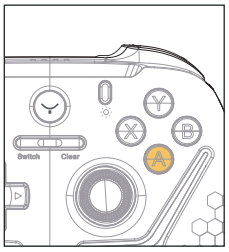

**A Button:**

This button tilts the module pitch down. Press and hold to continuously lower the pitch until it reaches its lowest position. Release to stop at the current angle.

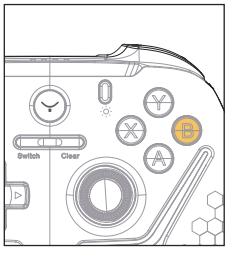

**B Button:**

Press this button to turn on and off the front lights (default setting is on).

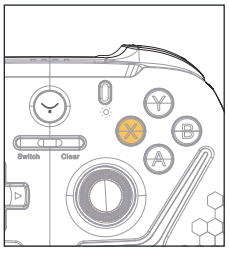

**X Button:**

Press this button to turn on and off all the lights(default setting is on).

## 5.2 Connecting Yarbo Controller

### 5.2.1 Connecting physical controller to Yarbo

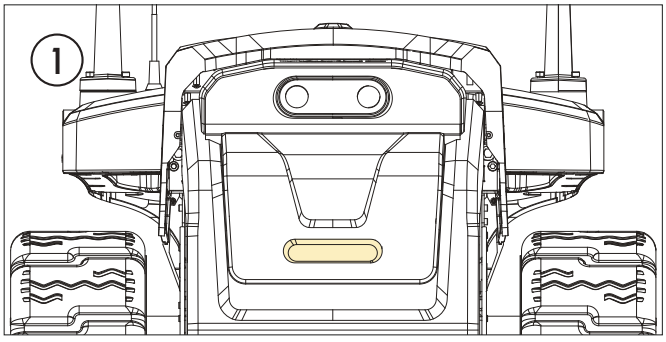


Before proceeding, ensure that Yarbo is powered on. A solid white light on the Yarbo (as shown in the figure above) indicates that Yarbo is powered on and ready for the controller setup.

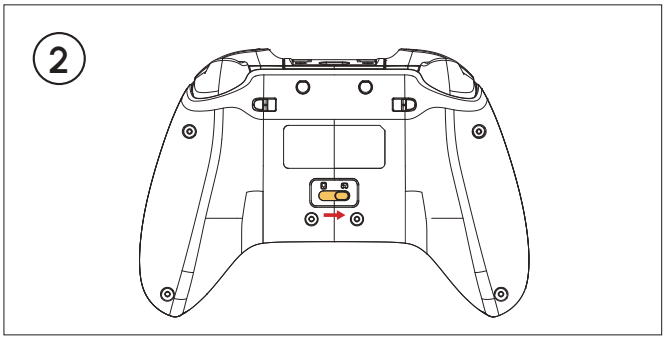


Slide the switch to the right to enter Controller Mode.




Short-press the Yarbo Logo Button to power on the physical controller.




Observe the LED indicator on top of the Yarbo Controller. A steady yellow light means the controller has successfully connected.




To obtain control of the physical controller, press and hold the Switch button for 2–3 seconds. Once control is granted, you can begin operating Yarbo.

### 5.2.2 If the Controller Does Not Connect

If the controller fails to connect, please follow the pairing steps below:




Press and hold the Logo Button on the controller for 3 seconds until the LED indicator on top of the controller starts blinking yellow.

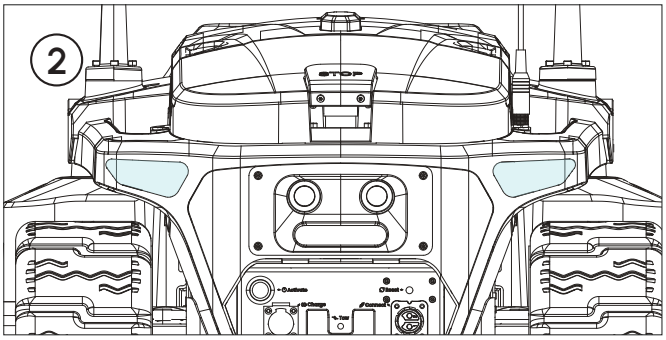


Press and hold the Power Button on Yarbo for about 3 seconds. The rear light will first turn red, then flash blue once to indicate it has entered pairing mode.

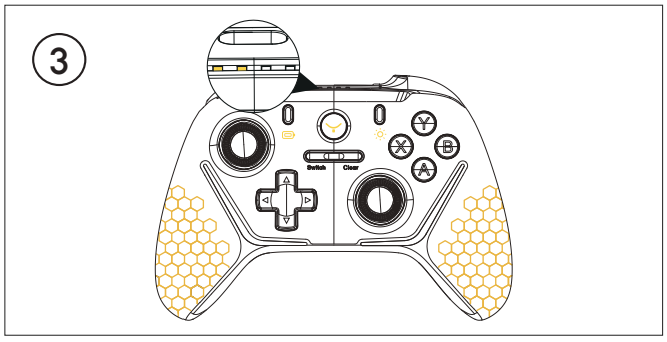


Wait for about 10 seconds. Once the controller is successfully connected, the LED indicator on top will turn solid yellow.

### 5.2.3 Connecting physical controller to mobile phone

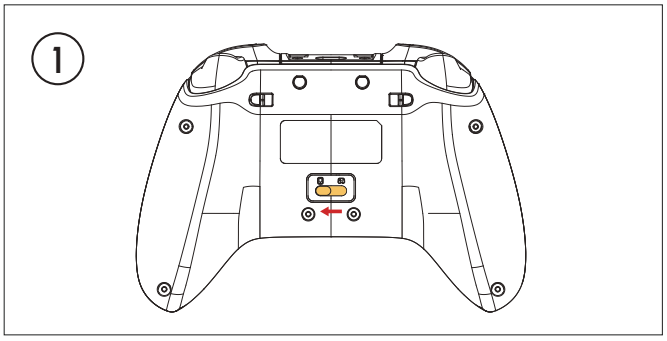


Slide the switch to the left to enter Phone Mode.

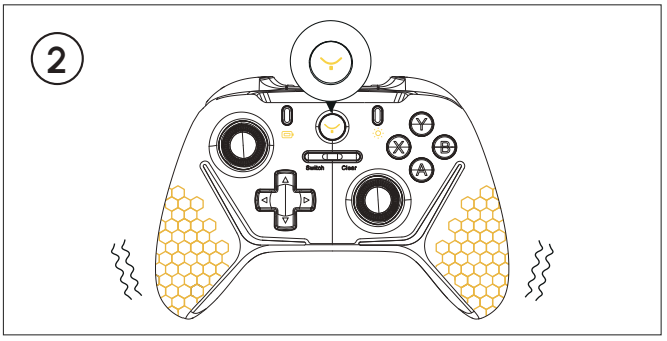


Press for one second to pair the controller with the phone if the controller is on. Press and hold for about 5 seconds to start and pair the controller with the phone if the controller is off.




Open the phone setting page and turn on Bluetooth. Click the '**APP Controller**' to pair the Yarbo physical controller.




Observe the LED light on the top of Yarbo Controller. If the left yellow light is on steadily, it indicates that connected with the phone.

## 5.3 Yarbo Controller Holder Installation Guide

The controller holder allows users to conveniently mount their phones for real-time camera viewing, while using the physical controller to operate the core from anywhere in the world.

## 5. Physical Controller Instruction

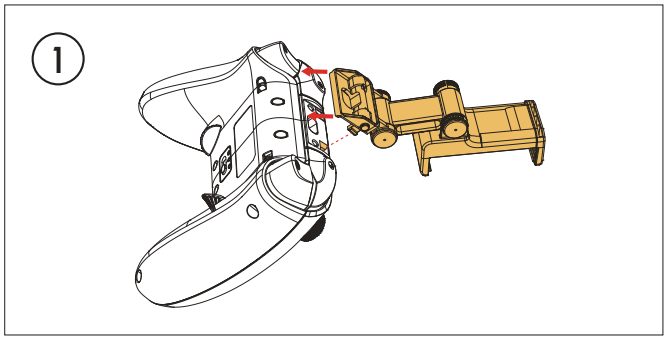


Locate the Physical Controller Holder provided in the Yarbo Core package and locate the side button on the Holder.

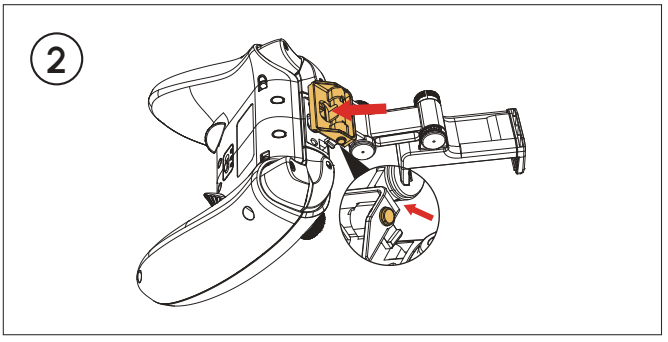


Locate the shafts and holes and press the buttons on both sides of the Holder, and then press the middle part as shown in the picture.

### ⚠ WARNING

- Never place the controller in the reach of children.
- Never allow unauthorized nor untrained persons to use the controller.

### ⚠ CAUTION

- DO NOT expose the controller to freezing temperatures for an extended duration.
- DO NOT spill water or snow on the surface of the controller. If any water or snow comes into contact with the controller, wipe it immediately.

### ⚠ NOTICE

- Please note that any damage or malfunction caused by or misuse of the controller will not be covered by the warranty.

## 5.4 LED Indicator Description

### Yarbo connecting mode

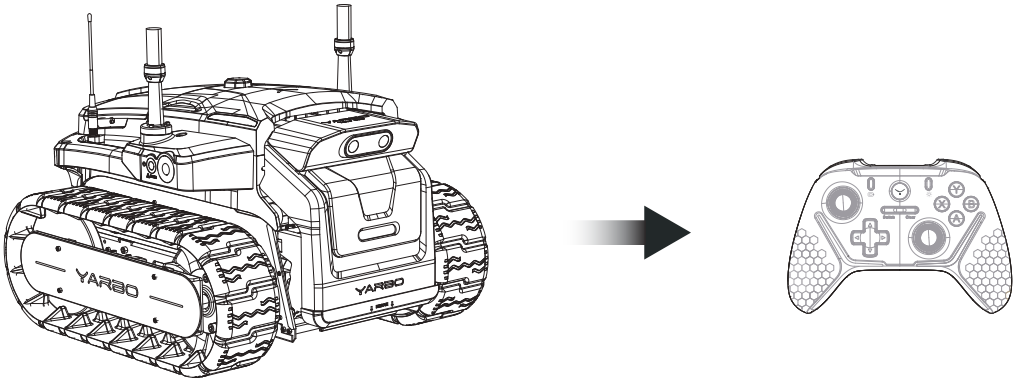


| LED Indicator | Description |
|---|---|
| Two lights steady on 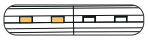 | Controller and the Yarbo are connected successfully |
| Two lights flash slowly 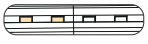 | Controller is connecting to the Yarbo |
| Two lights flash rapidly  | Initiate the pairing of the Controller with the Yarbo |

## 5. Physical Controller Instruction

### Phone connecting mode

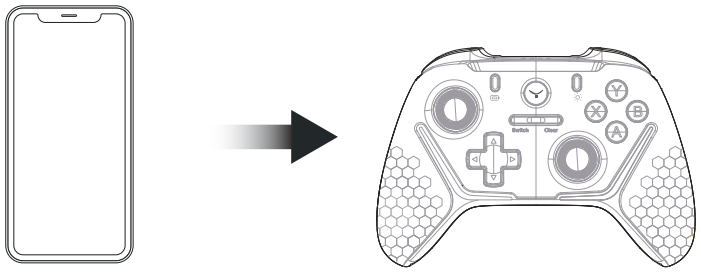

| LED Indicator | | Description |
|---|---|---|
| One light steady on |  | App and Controller are connected successfully |
| One light flash slowly |  | The Controller is connecting to the App |
| One light |  | Initiating the pairing of the controller with the App |

### Additional Notes

Four lights flash during the charging process till fully charged.
Two flashing lights indicate the battery level is low during use.

# 6. Maintenance Guide

## 6.1 Charging

### 6.1.1 Charging Yarbo With Wired Charger

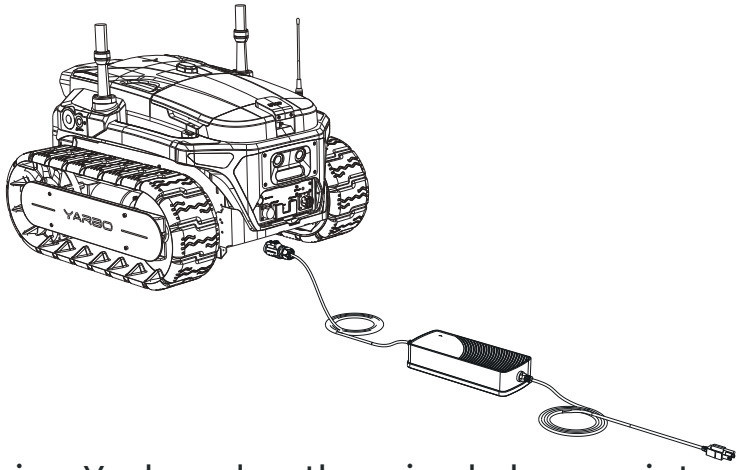


- To begin charging Yarbo, plug the wired charger into an electrical outlet, and then connect it to the charging port located at the rear of Yarbo.

**⚠ WARNING**

- Inspect the charging cable for any signs of damage or fraying. A damaged cable should be replaced to ensure safe and efficient charging. Also, please ensure that the connectors are clean and free from debris or dirt, as this can affect the charging process.
- When connecting the charger to Yarbo, please ensure a secure and snug connection. A loose connection may result in slow or interrupted charging. Double-check that the charger is firmly plugged into both Yarbo and the power source.
- Please ensure that the wired charger you are using is compatible with Yarbo. Check the charger's specifications and ensure it provides the appropriate voltage and current for charging Yarbo. Wrong voltage setting will damage the wired charger and Yarbo's battery pack, may lead to fire and explosion.
- The wired charger is not rated for outdoor use. It is intended to charge Yarbo when the wireless charger is unavailable or the battery is completely dead. Wireless charging can only be initiated when the core is powered on. The battery can be charged directly through the use of an optional battery charging cable accessory available on the Yarbo store.

### 6.1.2 Charging Yarbo with Docking Station

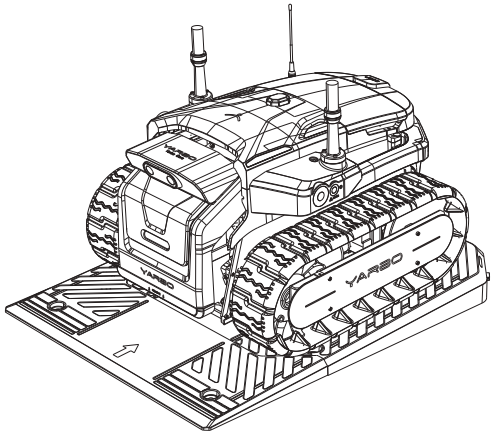

① Once the Yarbo is placed at the center of the docking station, automatic charging will commence without user intervention for 3 minutes.
② Click the **Charge** button on the APP home page if you want Yarbo initiate the charging process right now.

## Autonomous Recharge

- Before using autonomous recharge, you need to:

  ① Make sure you have already set up a map for Yarbo.
  ② Yarbo is located within your area.
  ③ Make sure the RTK Signal is strong or medium.
  ④ Map needs an area, pathway to the dock from the area and a docking station.

- Normally, Yarbo will automatically return to charge when it detects low battery level (<20%). You can also manually send Yarbo to the docking station to recharge by:

  ① Tapping the "Recharge"button on the Yarbo app's virtual controller page
  ② Tapping the "Recharge"button on the Yarbo app's automonous plan page.

## Manual Recharge

- Use the physical/virtual controller, manually drive Yarbo onto the docking station. Ensure that the Yarbo is positioned directly at the center of the docking station and parked in the correct orientation.
- Press the charge button on the app homepage.

## 6.2 Before Conducting Any Maintenance

**⚠ WARNING**

- Please ensure that you do not wear open-toed shoes or go barefoot when performing the following maintenance tasks.
- Always use appropriate Personal Protective Equipment (PPE). Wear protective gloves and goggles whenever performing maintenance tasks or when needed.
- Ensure that Yarbo is switched OFF and disconnects the battery when performing the following maintenance tasks.

### Disconnecting Battery from Yarbo

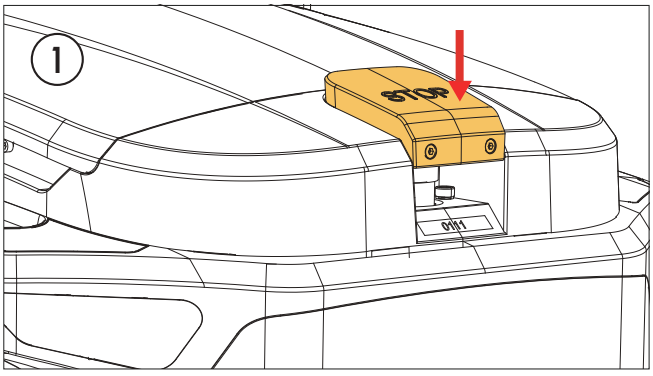


**Press** the Emergency Stop button first, and then shut down the Yarbo Core from the app.

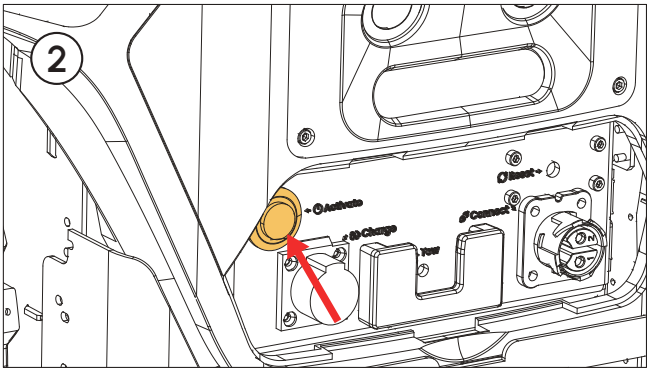


**Confirm** that Yarbo is turned off by checking if all the lights are switched off. For detailed instructions on how to turn off the machine, please refer to the **Yarbo App.**

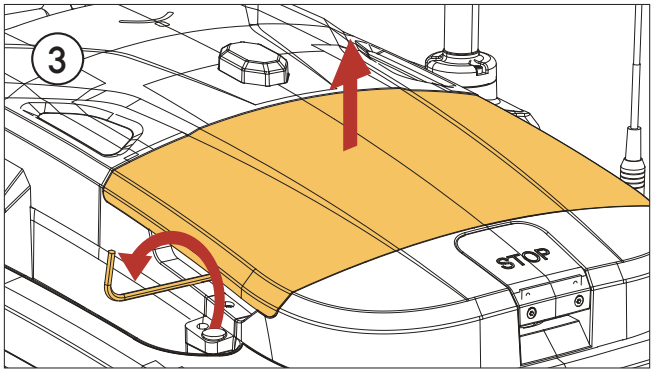


**Remove** the battery cover and unplug the cable connecting Yarbo and battery pack.

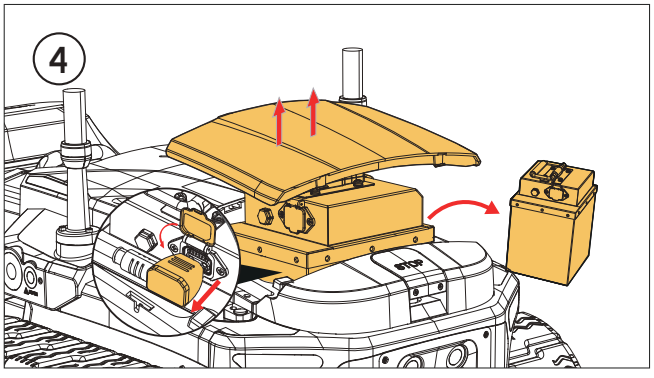


**Remove** the battery cover and unplug the cable connecting Yarbo and battery pack. **Remove** the battery pack and safely secure it.

## 6.3 Cleaning Yarbo Core

Please avoid using solvents or large amounts of liquid on plastic components, as commercial solvents can potentially harm the appearance and integrity of your Yarbo. Instead, use a clean and gentle cloth or a brush to remove debris, mud, and other particles. Please avoid using the high-pressure water hose or any high-pressure cleaning methods to clean the Yarbo core.

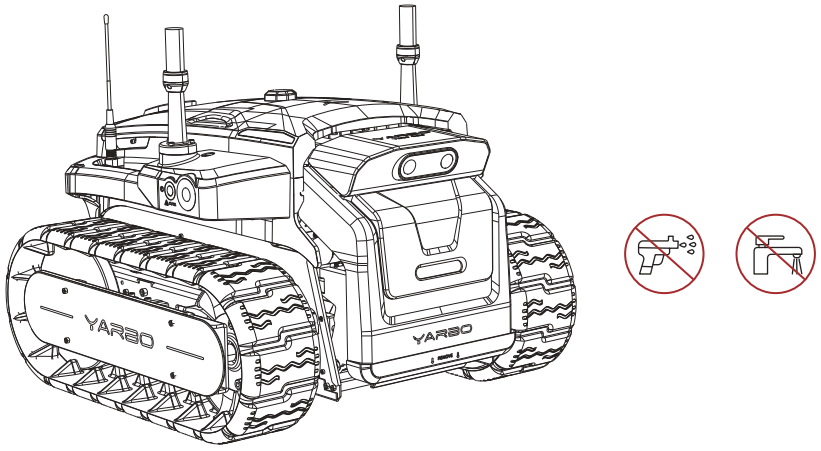


**WARNING**

- If the cameras used for obstacle avoidance are covered, dirty, or unclear, the visual algorithm may not function correctly. Clean the cameras regularly using a soft, dry cloth to ensure proper visibility.
- Keep the power socket away from any liquids or moisture. Do not allow the power socket to come into contact with anything wet.
- Always install the protective covers on both the power socket and module connector when not in use. This helps prevent damage from dust, water, or accidental contact.

## 6.4 Installing Tow Hitch

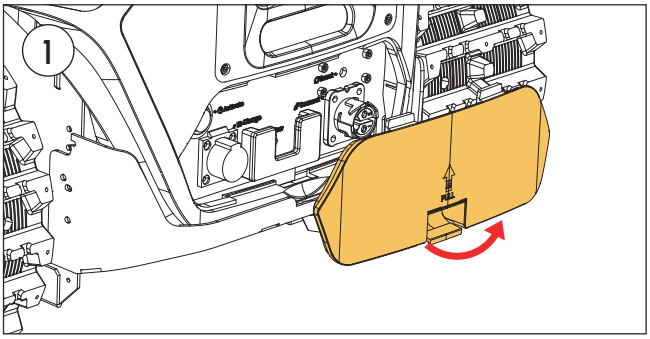


**Remove** the rear cover.

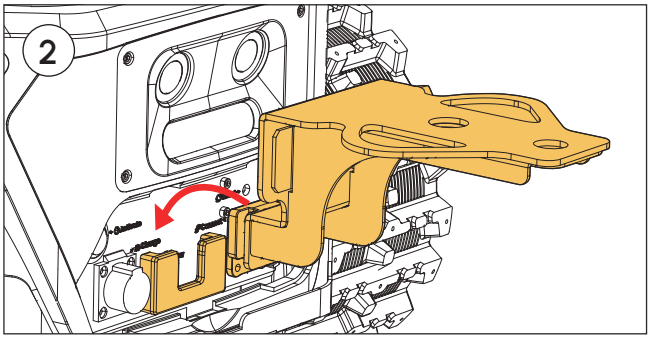


**Locate** the tow hitch provided in the package. **Align** the connection part of the tow hitch to the mount .

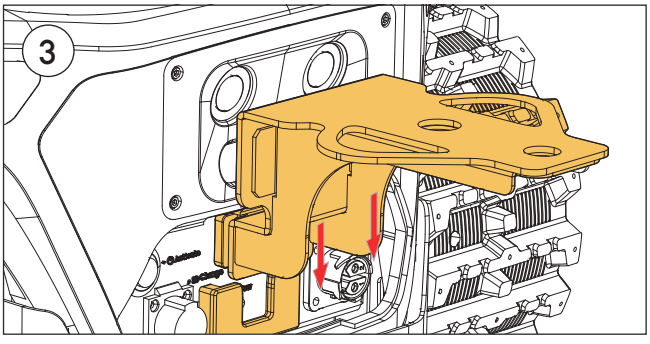


**Slide** the tow hitch down to the bottom of the mount.

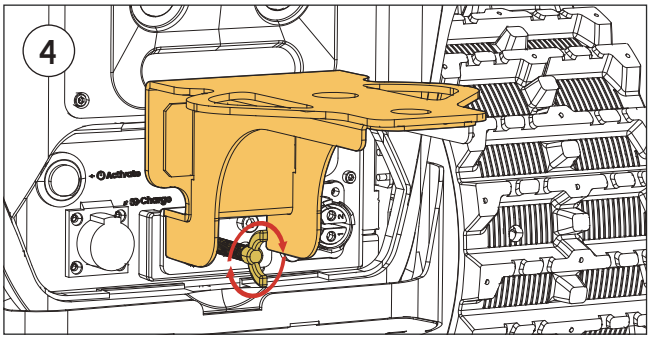


**Locate** the tow hitch screw provided in the package and **tighten** the tow hitch by screwing the bolt. Ensure that the bolt is securely fastened to prevent any loosening while towing.

**Periodically check the bolt to ensure that it has not loosened and keep it tight to avoid damage to the to hitch**

## 6.5 Applying Grease on the Tracks

It is crucial to apply grease regularly on the tracks to maintain smooth rotation of the drive wheel and road wheels. This is especially important during the machine's first year of use. Over time, grease may degrade and diminish, making regular refills essential. We advise applying grease every two weeks. While various grease types are suitable, we recommend opting for high-vacuum grease for optimal performance. Below are the situations when immediate application of grease is needed.

**Motion Hampered**: When you sense that your Yarbo has not been greased for a while and its motion might be hampered due to this.
**Noisy Operation**: Unusual noise coming from the tracks indicates possible friction or wear. Applying grease can help reduce this noise by lubricating the moving parts and reducing friction.
**Track Disengagement**: If you notice the track becoming detached from the main body during inspection, it could be due to inadequate lubrication. Greasing the tracks can help maintain a secure connection between the tracks and the main body of the machine.

⚠ NOTICE

- The presence of debris or mud on the rubber tracks can negatively impact Yarbo's driving performance. To maintain optimal performance, make sure to clean debris and mud from the rubber tracks regularly.

## 6.6 Updating Firmware

Ensuring optimal performance of Yarbo at the hardware level is crucial, but it's equally vital to maintain the firmware up-to-date. Regular firmware update notifications will be made available through the Yarbo App. We highly recommend utilizing the built-in Over-The-Air (OTA) technology within the Yarbo App to update the firmware as soon as new versions are released. These updates consistently enhance the capabilities of the product.

Before proceeding to update firmware, please ensure that the following conditions are met:

① The battery level is at least 30%.
② The Data Center is connected to the internet.
③ No working schedules are active within the next hour to prevent interruptions during the update process.

## 6.7 Keeping Battery at its Best Performance

Extended periods of inactivity can significantly diminish the performance of the battery pack. To minimize this degradation, it's important not to leave the battery pack inactive for more than three months. Lithium-ion battery packs experience slight self-discharge over time. Charging the battery pack for at least 15 minutes once every three months will suffice to maintain its activity level.

# 7. Specification

## 7.1 Yarbo Core

| Item | Value |
|---|---|
| Dimensions, length*width*height | 27*22*20in/675*566*512mm |
| Weight, without battery pack | 123.5lbs/56kg |
| Weight, with battery pack | 145.5lbs/66kg |
| Operational Temperature | -13°F to 113°F/-25°C to 45°C |
| Towing Ability | GTW up to 500lbs/200kg |
| Module Pitching Angle | 0° to 18° |
| Internet Access Technology | WIFI, WiFi-halow, 4G |
| Navigation Technology | RTK-GPS, Computer Vision, Sensors |
| Charging Technology | Wired, Wireless |
| Obstacle Avoidance Technology | Computer Vision by cameras |

## 7.2 Docking Station

| Item | Value |
| --- | --- |
| Dimensions, length*width*height | 25*36*3in/640*910*76mm |
| IP Rating | IP67 |
| Operational Temperature | -13°F to 113°F/-25°C to 45°C |
| Charging Technology | Wireless Charging through embedded coils<br>No exposed contacts. Fully autonomous |
| Charging Voltage | 42V |
| Installation Requirement | Level surface |

## 7.3 Battery

| Item | Value |
| --- | --- |
| Dimensions, length*width*height | 7*6*10in / 178*152*248mm |
| Weight, without battery pack | 22.5lbs / 10kg |
| Nominal Voltage | 36V |
| Nominal Capacity | 38.4Ah |
| Operational Temperature | -13°F to 113°F / -25°C to 45°C |
| Battery Management System (BMS) | Over-heating, short circuit, over-current and over-charge protection |
| Charging Time (0 to 100% SOC, wireless charging using Yarbo Docking Station) | About 3 hours |
| Charging Time (20% to 80% SOC, wireless charging using Yarbo Docking Station) | About 1 hour and 30 minutes |
| Battery ChemistryWired Charger) | NCM Li-ion |

# 8. Limited Warranty

## 8.1 Residential Warranty Coverage

| Item | Parts | Warranty Period |
|---|---|---|
| Motor system | Linear Actuator | 2 Years |
| | Driving Motor | |
| Power System | Lithium-ion Battery | 2 Years |
| | Power Adapter | |
| | Docking Station | |
| Electric Control System | RTK System | 2 Years |
| | Motherboard | |
| Vision System | Camera | 2 Years |
| Consumables | Shell | 1 Year |
| | Track | No Warranty |

# 8. Limited Warranty

| Item | Parts | Warranty Period |
|---|---|---|
| Motor System | Auger/Impeller Motor | 2 Years |
| | Chute Rotation Motor | |
| | Deflector Motor | |
| Vision System | Camera | 2 Years |
| Consumables | Skid Shoes | 2 Years |
| | Top Chute | |
| | Impeller | |
| | Shell | |
| | Auger Blades | 2 Years |
| | Belts | 1 Year |
| | Scraper Bar | |

## 8.2 General Statement

1. Yarbo Inc. shall not be liable for compensation if it can prove one of the following circumstances:

① The product has not been put into circulation;
② When the product is put into circulation, the defect causing damage does not yet exist;
③ When the product is put into circulation, the scientific and technological level cannot yet detect the existence of defects.

2. The warranty service is valid from the date of product delivery. When requesting after-sales service, our authorized service dealer may require the original invoice or receipt containing relevant information. In the absence of proof of purchase, the warranty period will commence based on the product's manufacturing date.

3. This warranty applies exclusively to original purchasers. Replacements do not initiate a new warranty; the original warranty remains valid from the initial delivery date. It's important to note that you may be responsible for covering the delivery costs associated with return, repair, or replacement of the product.

4. Yarbo will perform a diagnostic assessment on the returned product. If the defective product aligns with our limited warranty policy, Yarbo will cover the cost of repair or replacement. However, you may be responsible for the associated delivery charges.

5. Yarbo assumes no liability for any direct or indirect consequences arising from any cause, including but not limited to loss of use or loss of profits.

6. Please be mindful that any damage resulting from inappropriate packaging, other than the standard Yarbo packaging, is the sole responsibility of the customer. If you no longer have the original packaging, you must obtain suitable packaging or consult Yarbo's technicians for proper packaging guidance.

### Repair and Warranty Services:

We have established a global after-sales service team, supported by local service partners, to ensure prompt and efficient service for all our users worldwide. Our comprehensive support includes a dedicated call center and local repair centers in key markets.

To request a repair service, please send your request to **support@yarbo.com** or contact us at **+1(888)-550-6809.**

If your product is still within the free warranty period and meets the criteria for a warranty repair, the service will be provided at no charge. If your product does not qualify for free warranty repair, standard repair fees may apply.

## 8.3 Warranty Forfeiture

The warranty may be forfeited under the following circumstances:

1. Failure to adhere to the operating or maintenance guidelines outlined in the User Manual.

2. Neglecting to perform the prescribed battery and product maintenance procedures.

3. Modification or repair conducted by an unauthorized service provider.

4. Damages resulting from forced operation with aged or deteriorated components.

5. Damages or product malfunctions arising from the misuse of unauthorized components or accessories.

6. Damages caused by non-defective factors, including but not limited to crashes or collisions. Additionally, damages caused by manually operating the product with a low-charged or defective battery, or tampering with the seals and labels on the product.

7. Components subject to normal wear and tear, such as the auger, rubber track, belt, or other parts subjected to typical usage, are not covered by warranty. For the purchase of these items, refer to our website at www.yarbo.com/pages/contact-us or connect with an authorized service dealer.

8. Warranty coverage does not extend to products used for commercial purposes. Commercial use includes instances where the product is employed in institutions, rented out, or utilized at multiple locations.

# YARBO INC.

www.yarbo.com

For Privacy Policy, please visit:
https://www.yarbo.com/legal/privacy-policy
Please note, the User Manual may be updated based on the changes in production, product specification, included contents and so on.
For the latest version of the User Manual, please visit:
https://www.yarbo.com/support

Refer to Friends & Get Rewards

Share Your Yarbo Journey

Join Yarbo Exclusive Community

+1 (888)550-6809

support@yarbo.com

1951 Ocean Avenue, Unit 3, Ronkonkoma, NY 11779 United States

V 1.7.7