YARBO

2025

USER MANUAL

LAWN MOWER PRO

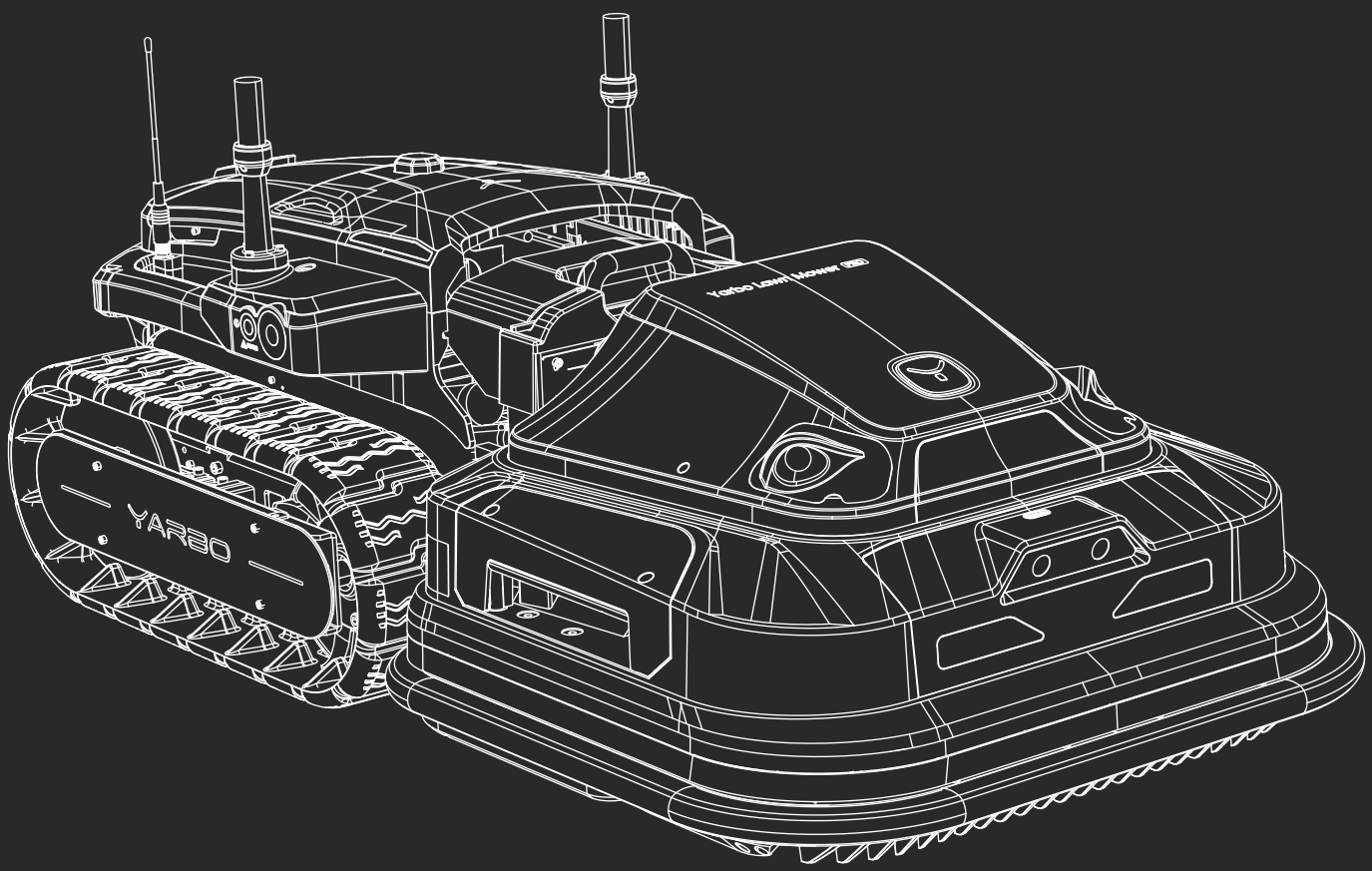

User Manual

Video Assembly Guid

YARBO

Table of Contents

Welcome

Safety

1.1 Pre-operation Safety Instructions 01
1.2 Operation Safety Instructions 01
1.3 After-operation Safety Instructions 02

Box Content Introduction

2.1 Lawn Mower Pro Box Content 03
2.2 Product Overview 04

Installation Guide

3.1 Assembling Lawn Mower Pro 06
3.2 Installing Yarbo App 09

Yarbo APP Features

4.1 Features Statement 10

Physical Controller Instruction

5.1 Button Introduction 13
5.2 Connecting Yarbo Controller 16
5.3 Yarbo Controller Holder Installation Guide 18
5.4 LED Indicator Description 20

Maintenance Guide

6.1 Before Conducting Any Maintenance 22
6.2 Cleaning Yarbo Core 23
6.3 Replacing Cutting Blade 24
6.4 Applying Grease on the Tracks 27
6.5 Updating Firmware 28
6.6 Keeping Battery at Its Best Performance 28

Specification

7.1 Yarbo Lawn Mower Pro Module 29

Limited Warranty

8.1 Residential Warrant Coverage 30
8.2 General Statement 31
8.3 Warranty Forfeiture 32

Table of Contents

Welcome



Thank you for purchasing Yarbo Lawn Mower Pro. We are more than happy to welcome you to our user community. We understand your anticipation for this long-awaited yard robot to free yourself and your family members from the annoying mowing routine. Before you start using our product, we kindly ask you to thoroughly read this user manual for proper usage.

1. Safety

⚠ MUST READ

Failure to follow safety instructions may result in serious injury or property damage. Yarbo disclaims any liability for consequences arising from improper use or failure to follow these instructions.

⚠ 1.1 Pre-operation Safety Instructions

■ Ensure the area is free of obstacles that may cause damage to the product.
■ Verify that the product is functioning correctly before use.
■ Do not use the product if any parts are broken or malfunctioning.
■ Do not allow children or pets to access the controller (physical or mobile app).
■ Ensure the product is assembled and operated according to the user manual. The operator must read and fully understand the manual before use.
■ Clean the cameras before use, if needed. Use only non-corrosive cleaners and soft materials. Take extra care, as the cameras may become hot and cause burns due to the heating film.

⚠ 1.2 Operation Safety Instructions

■ Always maintain a safe distance when using the controller or during automatic operation. Never place any part of your body near or under the Yarbo system, especially when it is turning or climbing slopes.
■ Do not allow children, individuals with physical, sensory, or mental limitations, or those lacking experience or knowledge to operate Yarbo. Please note that local regulations may impose age restrictions on the operator.
■ A trained and authorized individual must supervise untrained persons whenever Yarbo is in operation.
■ Do not operate Yarbo if the operator is under the influence of alcohol, drugs, or illness.
■ Do not throw objects toward the product or surrounding vehicles and buildings, as this may damage the auger or impeller of the active module.
■ If Yarbo is operating in public spaces, clearly display warning signs around the work area. Examples include:
"Warning! Automatic Snow Blower! Keep away from the machine! Supervise children!"
"Warning! Automatic Lawn Mower! Keep away from the machine! Supervise children!"
"Warning! Automatic Blower! Keep away from the machine! Supervise children!"
■ Do not operate Yarbo near fires, hot ashes, or heat sources to prevent fire hazards.

■ Ensure Yarbo is powered off before clearing blockages, performing maintenance, or conducting inspections. If abnormal vibrations occur, stop operation immediately, press the emergency stop button, and inspect the device for damage. If the vibration continues, remove the battery and check for potential faults.
■ Never step or sit on Yarbo at any time.
■ Only use the provided docking station to charge Yarbo. To avoid electric shock, overheating, or battery leakage, do not touch any part of the charging station during charging.
■ Caution: Slippery Surfaces — Areas where snow has been cleared may remain slippery. Pedestrians and vehicles should proceed with caution to avoid accidents.
■ Adapt to Extreme Weather — In extreme conditions (e.g., heavy snowfall or icy surfaces), Yarbo's performance may be affected. Adjust your operation strategy accordingly for optimal and safe use.

⚠ 1.3 After-operation Safety Instructions

■ Always wear gloves and follow the recommended maintenance procedures. Shut down Yarbo and remove the battery before performing any maintenance, inspections, or clearing blockages in the discharge chute.
■ Disconnect the battery from the core if Yarbo will not be used for an extended period.
■ Regular Maintenance: Regularly inspect the blades, battery, motor, and other parts to ensure proper function and minimize the risk of malfunction.

⚠ Disclaimer

This safety guide is provided for general informational purposes. The operator is solely responsible for ensuring compliance with local laws, regulations, and safety standards. Yarbo disclaims all liability for injuries, damages, or losses arising from improper use, failure to follow these instructions, or failure to comply with applicable local laws and regulations.

2. Box Content Introduction

2.1 Lawn Mower Pro Box Content

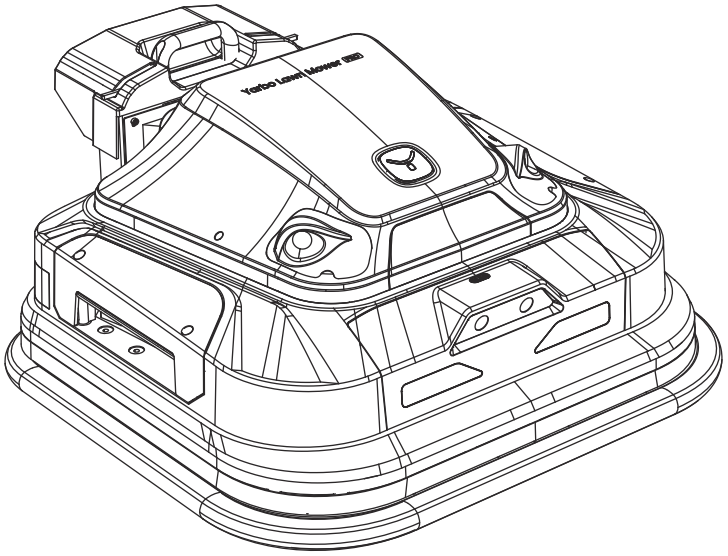

Lawn Mower Pro User Manual



x2

Cutting Discs



Module Vertical Stand

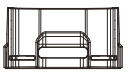

Rubber Connection Cover



Phillips-Head Screwdriver



x8

Cutting Discs Spare Bolts



x20

Cutting Blade Spare Bolts



x2

Straight Blade Spare Bolts



x20

Spare Cutting Blades



Lawn Mower Pro User Manual

2. Box Content Introduction

2.2 Product Overview

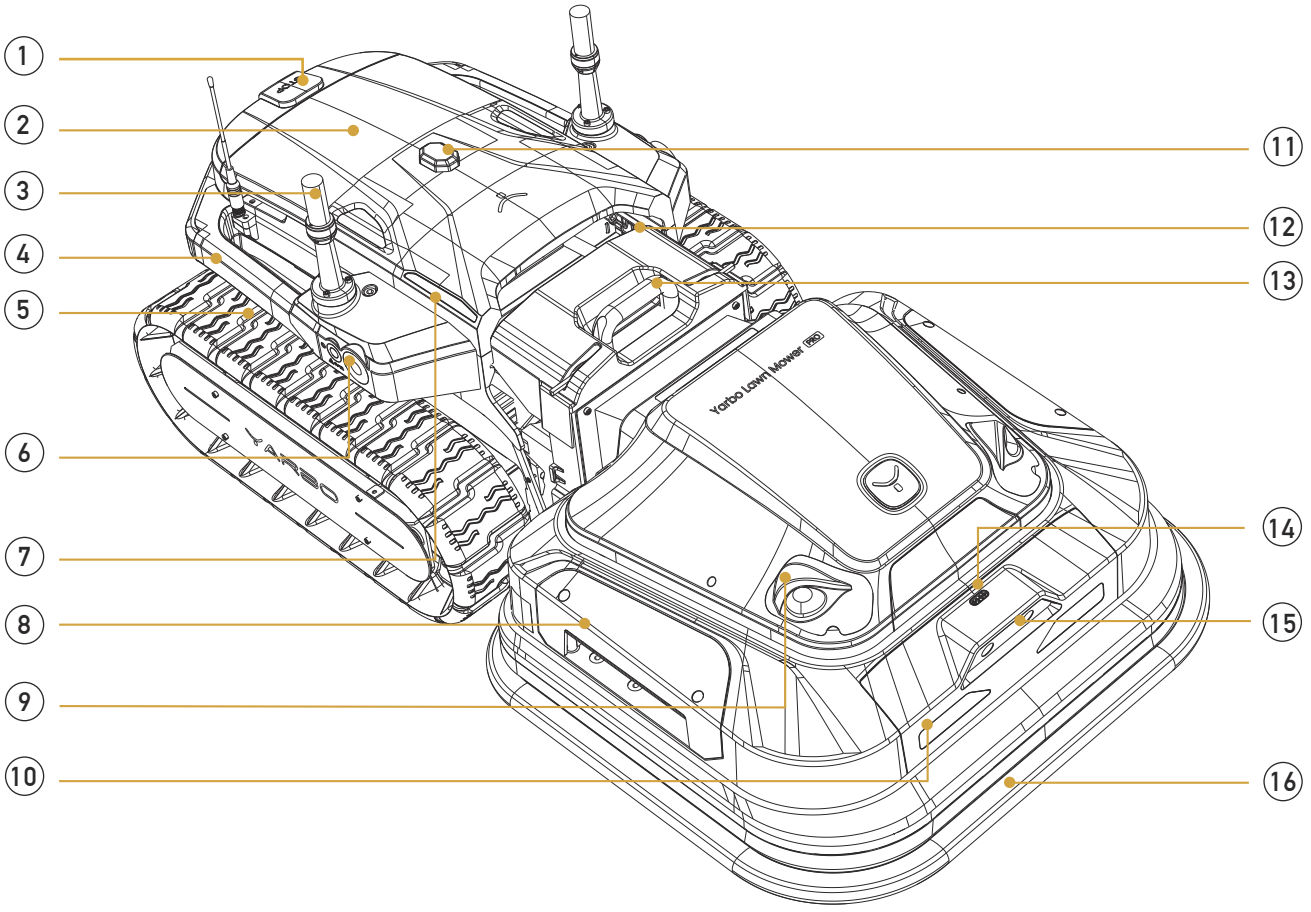

1. Emergency Stop Button
2. Battery Cabin
3. RTK antenna
4. Lifting Handle
5. Lawn Track
6. Side Camera
7. Battery Indicator Light
8. Lifting Handle
9. Ultrasonic Radar
10. Front Light
11. Warning Light
12. Rubber Cover for Module Connection
13. Lifting Handle
14. Rain Sensor
15. Front Binocular Camera
16. Bumper

2. Box Content Introduction

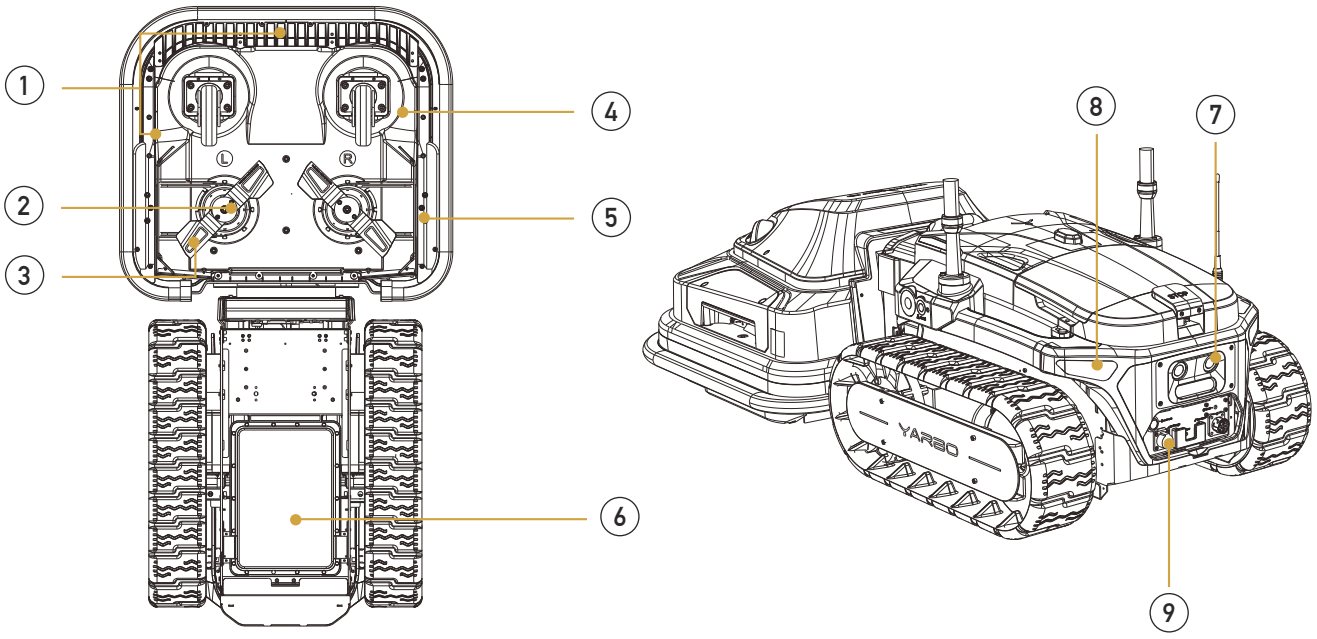

1. Skid Skirt
2. Screw Protection Cover
3. Straight Blade
4. Caster Wheel
5. Blade Guard
6. Wireless Charging Receiver
7. Rear Binocular Camera
8. Rear Light
9. Activate Button

3. Installation Guide

3.1 Assembling Lawn Mower Pro

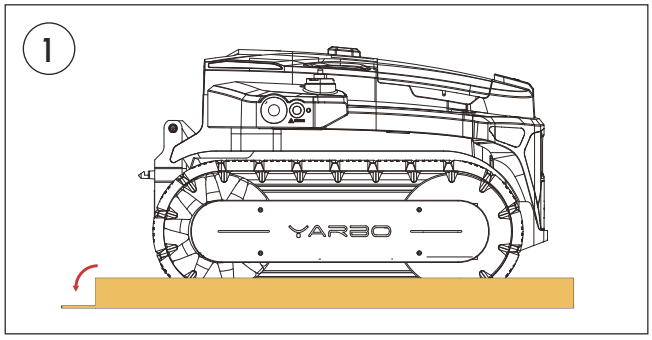

Cut the box along the cutting line on the bottom of the packaging box.

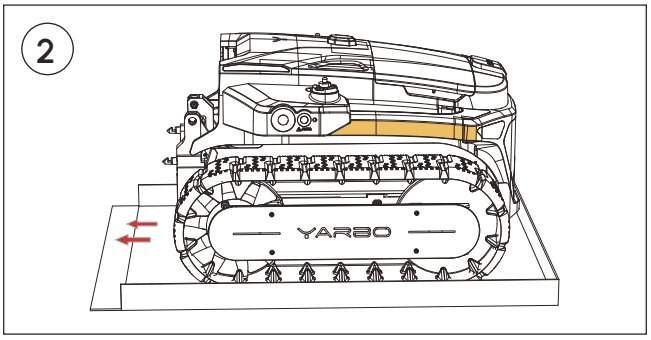

Grasp the lifting handles of the Yarbo Core and **push** the Yarbo Core out from the packaging box.

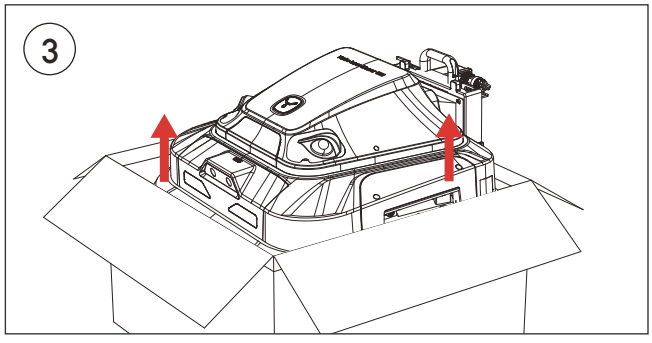

Carefully **lift** the Lawn Mower Pro Module out of the packaging box by grasping the lifting handle.

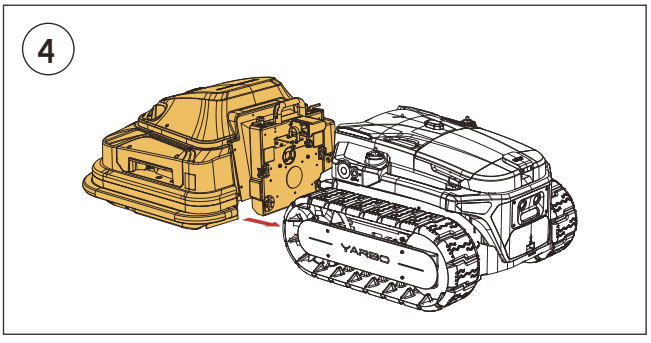

Pull the Lawn Mower Pro Module close to the Yarbo Core by **grasping** the lifting holder on both sides, ensuring that the two parts are prepared closely enough to connect the cable.

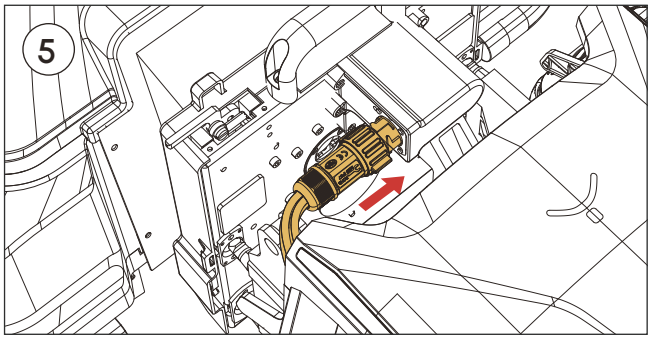

Carefully **insert** the cable into the port on the Lawn Mower Pro Module, ensuring that both are properly aligned and securely connected.

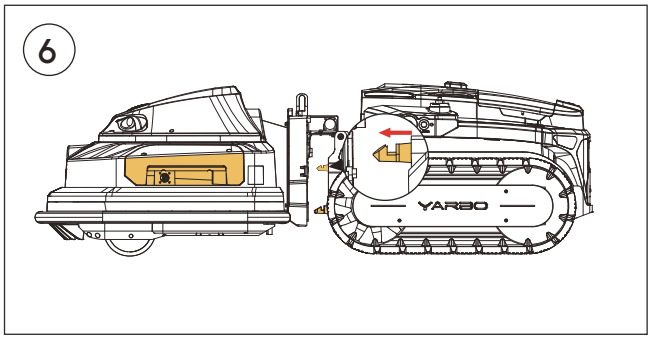

Lift the Lawn Mower Pro Module by **grasping** the holder and **locate** the shafts and holes in the Yarbo Core and Lawn Mower Pro Module. Slightly **push** the Lawn Mower Pro Module towards the Yarbo Core after the proper alignment.

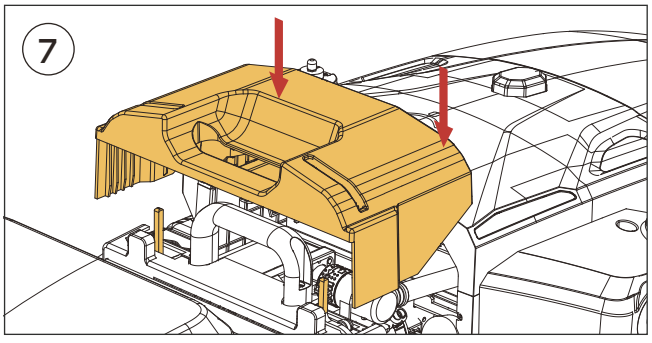

Lift the two locks on the sides. **Locate** the the Plastic Connector Cover provided and **install** it onto the connection part of Lawn Mower Pro.

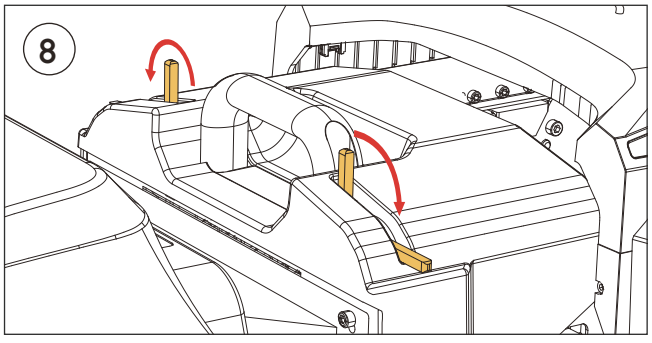

Push down the two locks on both sides.

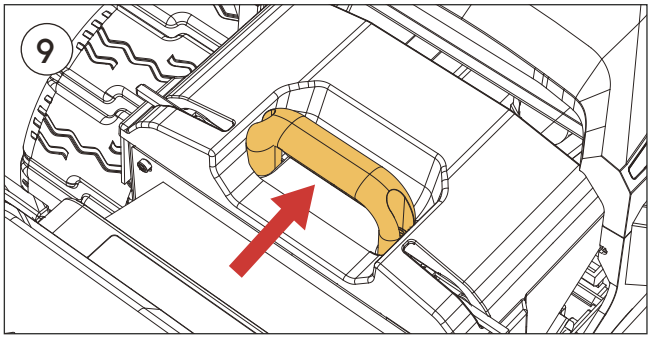

Push the connector in until it clicks. Make sure both locks are down and secure.

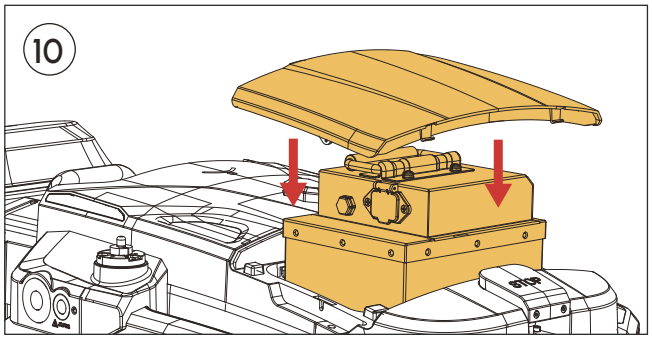

Lift the battery cover and **place** the battery into the battery cabin.

3. Installation Guide

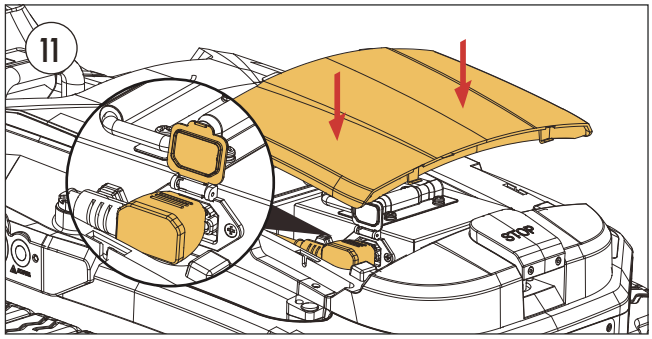

Remove the cover by grasping both sides with your hands and lifting. Place the battery inside the chamber and **connect** the cable from the Yarbo Core to the battery.

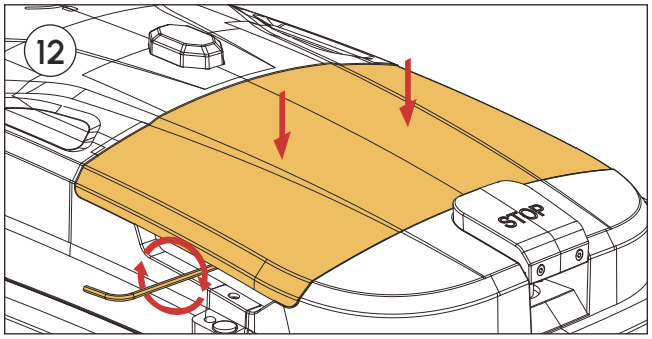

Replace the cover and **screw** the Anti-theft Bolts on both sides using Battery Cover Wrench provided in the package.

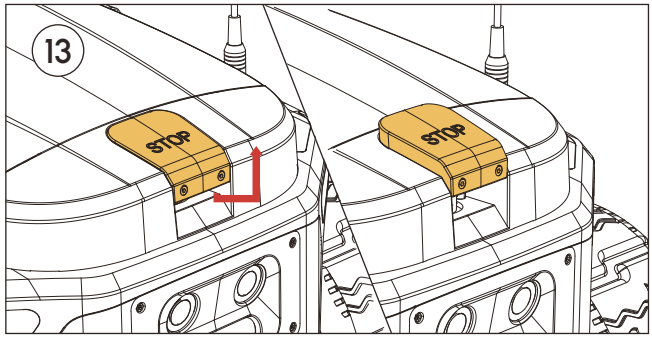

Lift the Emergency Stop Button.

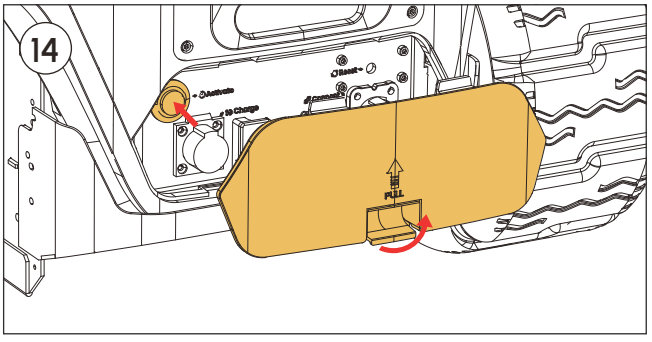

Remove the rear cover. **Press** the Activate button to turn on Yarbo. Reinstall the rear cover.

3.2 Installing Yarbo App

The Yarbo App is a professional application that empowers you to manage and control your Yarbo anytime, anywhere, elevating your lawn mowing experience to new heights. With its impressive features, you can easily set up work schedules, define multiple working areas and no-go zones, and monitor Yarbo's operating status. Additionally, you can receive the latest firmware updates and access instruction manuals, video tutorials, FAQs, and more through the App.

Follow these simple steps to install and set up the Yarbo App:

① Download the Yarbo App by scanning the QR code below or searching on the app store.
② After installation, log in to your Yarbo account. If you don't have one, please register.
③ Follow the steps of the first-time user guide on the app. If there are few steps that are hard to understand, please refer to the app section of this user manual.

*Note: Once a device is associated with a Yarbo account, it cannot be linked to a new account. However, you can invite others to use your Yarbo through Yarbo Sharing in the app.

iOS

Available on the App Store

Android

GET IT ON Google Play

APP Tutorial

4. Yarbo APP Features

Before using the Yarbo App, we recommend taking a few moments to read through this user manual. The app plays a key role in operating your Yarbo device, so understanding its features and how it works is essential for a smooth experience. If you haven't downloaded the app yet, please refer to Section 3.2.

4.1 Features Statement

1.Mapping

The mapping function is tailored for users to create a detailed map of the area where Yarbo to operate. Normally, A map encompass the docking station, pathways, woking areas, no-go zones. With the map, Yarbo can design its route through intelligent algorithm and execute the work plan depending on the personal schedule. The provided picture serves as an example of the map, showing two designated working areas, one No-go Zone, two Pathways and a docking station.

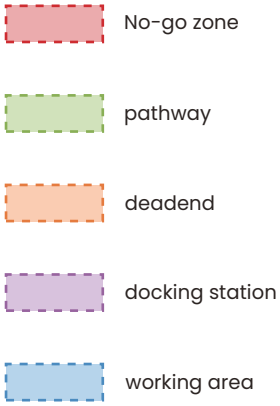

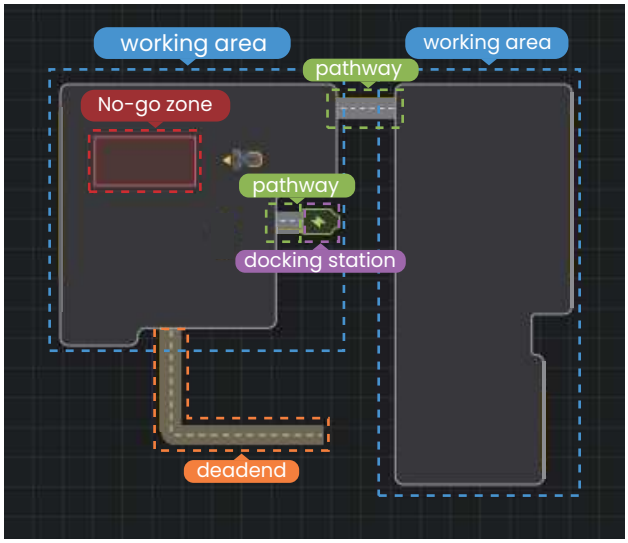

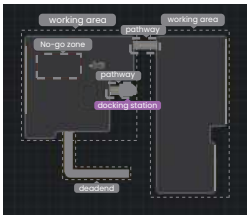

① Docking Station serves two purposes:

1. Charging Station – Marked by a green battery icon on the map.
2. Work Plan Starting Point – The designated location where Yarbo begins its tasks. If you need to move the docking station, update its position on the map by clicking "Reinstall Docking Station" on the Yarbo Settings page.

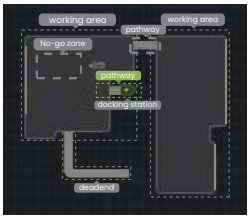

② Pathway:

A pathway is designed to be a narrow lane that connects the two elements. A pathway can connect the docking station and the working area. At the same time, it can also connect two working areas shown in the map.

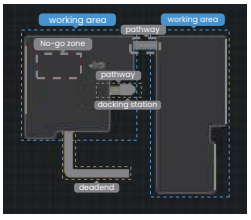

③ Working Area:

The working area refers to an enclosed zone where Yarbo performs operations. While the entire map requires at least one working area connected to the docking station, additional working areas may be added and connected via pathways. To define a working area, simply drive Yarbo along the desired perimeter - the system will automatically recognize the boundary and handle all navigation routing. Each working area must maintain a fully enclosed boundary for proper operation.

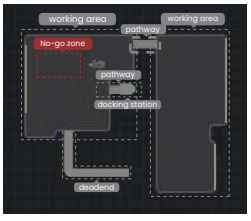

④ No-go Zone:

The "No-go zone" refers to enclosed areas within the working area where you do not want Yarbo to enter. Typically, these areas include the swimming pool, flower beds, restricted areas, and large obstacles that may obstruct Yarbo's normal operation. Although the Yarbo M1, SAM, and Blower can detect and avoid obstacles, drawing the no-go zone in advance can save time during operating.

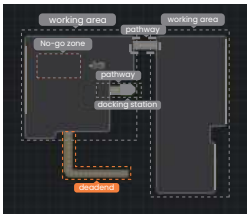

⑤ Deadend:

A deadend is a narrow path that matches the width of the Yarbo. One end must connect to a working area or pathway, while the other end can remain unconnected. When processing a deadend, the Yarbo moves straight in and straight out.

2.Work Plan

The Work Plan feature is designed to help users create tasks. Each work plan can be customized by choosing one or more elements on the map. In other words, users can create different work plans that include different elements on the same map. The purpose of creating different work plans is to ensure that different elements can have different working schedules.

3.Schedule

The Schedule feature empowers users to establish precise working time slots and work frequencies for the created work plan. Each schedule can only be linked with one work plan at a time, ensuring clarity and efficiency in task management. By utilizing schedules, users can enjoy 100% activities in alignment with their specific requirements.



5. Physical Controller Instruction

Physical controller is an alternative method for controlling Yarbo. This section aims to provide basic instructions for operating the Yarbo using the physical controller.

5.1 Button Introduction:

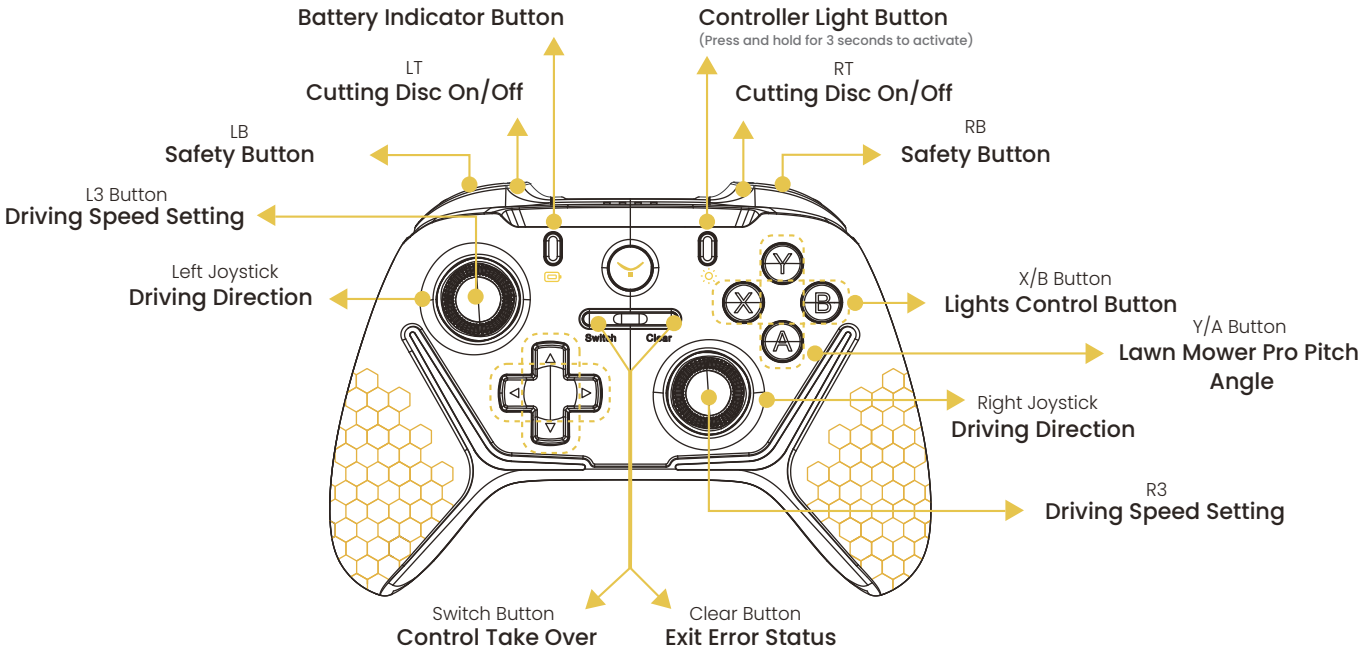

WARNING

- DO NOT operate Yarbo when the controller is exposed to an ambient temperature higher than 45℃ or lower than -25℃.

5. Physical Controller Instruction

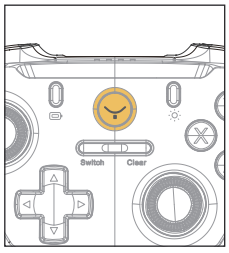

Yarbo Logo Button:

Logo button can be used to power on or off the controller. To power on the controller, short press the **Logo button for 1 second**. To power off, press the **Logo buttons for 3 seconds**. If the controller is not in use, it will automatically power off after 5 minutes.

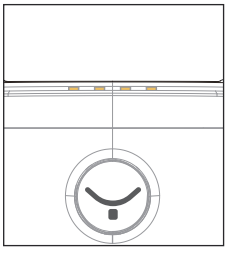

Battery Level

Press the Battery Indicator Button (refer to the picture on the next page) to check the battery level of the controller. The four LED lights on the top of the controller indicate the battery status.

	Light 1 stays on indicates battery level is 1%-25%.
	Lights 1 and 2 stay on indicates battery level is 26%-50%.
	Lights 1, 2, and 3 stay on indicates battery level is 51%-75%.
	All lights (1, 2, 3, and 4) stay on indicates handle battery level is 76%-100%.

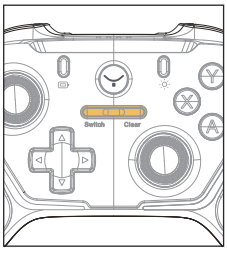

Switch & Clear Button:

Long press the switch button for 2 seconds to take over the control authority. Once the physical controller gains authority, the users can operate the Core.

Short press the switch or clear button to exit the error mode. When Yarbo encounters the dangers or stuck by any obstacles, it will stop and enters the error mode. After the dangers are cleared, pressed the start or clear button to exit the error mode.

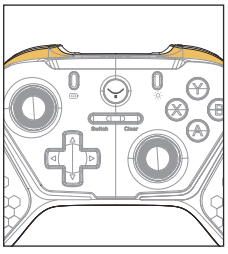

LB & RB (Safety button):

LB & RB are designed as safety button, which means that one of the buttons should be pressed throughout most of the operation that may cause dangerous result. Except for the X/A/B/Y buttons and D-pads, the rest of the function buttons must be pressed with the safety button to execute their own functions.

Hold the RB button down when operating the rover



Left Joystick and Right Joystick:

These two joysticks control the direction of movement and speed of the robot. Press the safety button RB and rotate the stick around to control Yarbo's movement in any direction. Press the left and right stick vertically down to switch between two-speed settings (L3, R3 button).

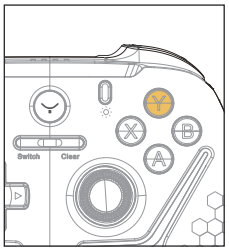

Y Button:

This button tilts the module pitch up. Press and hold to continuously raise the pitch until it reaches its highest position. Release to stop at the current angle.

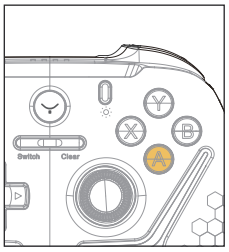

A Button:

This button tilts the module pitch down. Press and hold to continuously lower the pitch until it reaches its lowest position. Release to stop at the current angle.

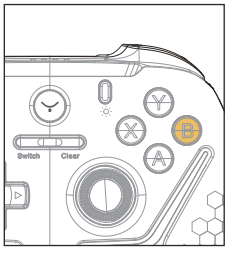

B Button:

Press this button to turn on and off the front lights (default setting is on).

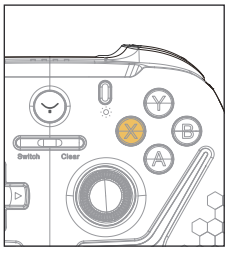

X Button:

Press this button to turn on and off all the lights(default setting is on).

5.2 Connecting Yarbo Controller

5.2.1 Connecting physical controller to Yarbo

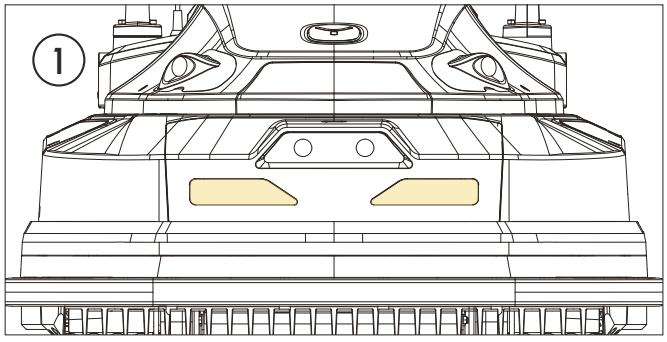

Before proceeding, ensure that Yarbo is powered on. A solid white light on the Yarbo (as shown in the figure above) indicates that Yarbo is powered on and ready for the controller setup.

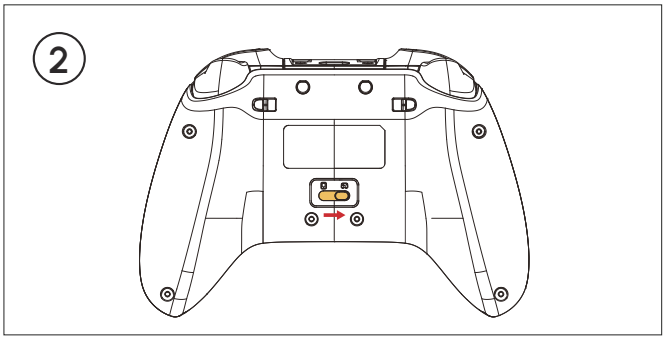

Slide the switch to the right to enter Controller Mode.



Short-press the Yarbo Logo Button to power on the physical controller.



Observe the LED indicator on top of the Yarbo Controller. A steady yellow light means the controller has successfully connected.

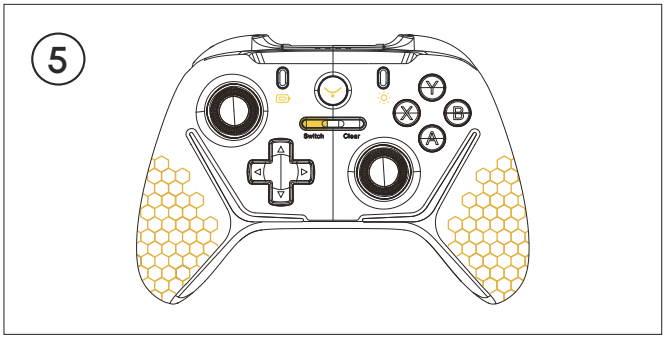

To obtain control of the physical controller, press and hold the Switch button for 2–3 seconds. Once control is granted, you can begin operating Yarbo.

5.2.2 Connecting physical controller to Yarbo

If the controller fails to connect, please follow the pairing steps below:



Press and hold the Logo Button on the controller for 3 seconds until the LED indicator on top of the controller starts blinking yellow.

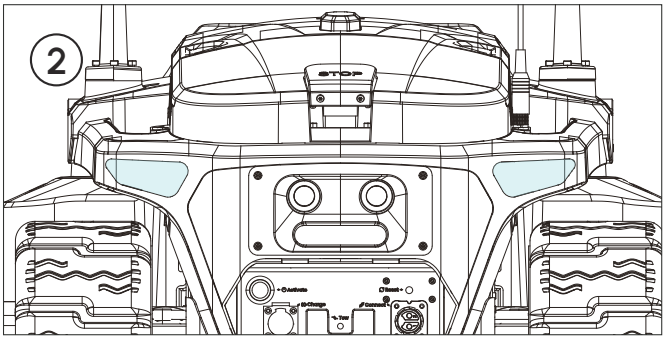

Press and hold the Power Button on Yarbo for about 3 seconds. The rear light will first turn red, then flash blue once to indicate it has entered pairing mode.

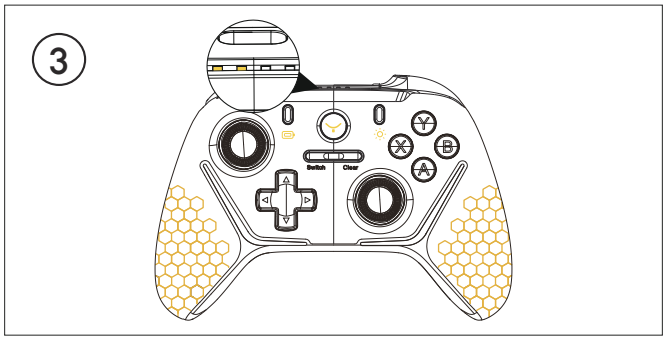

Wait for about 10 seconds. Once the controller is successfully connected, the LED indicator on top will turn solid yellow.

5.2.3 Connecting physical controller to mobile phone

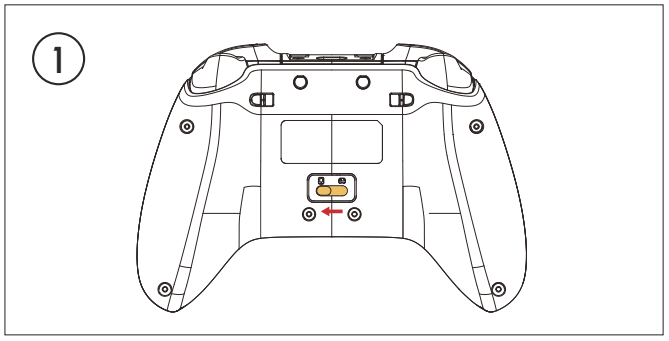

Slide the switch to the left to enter Phone Mode.



Press for one second to pair the controller with the phone if the controller is on. Press and hold for about 5 seconds to start and pair the controller with the phone if the controller is off.

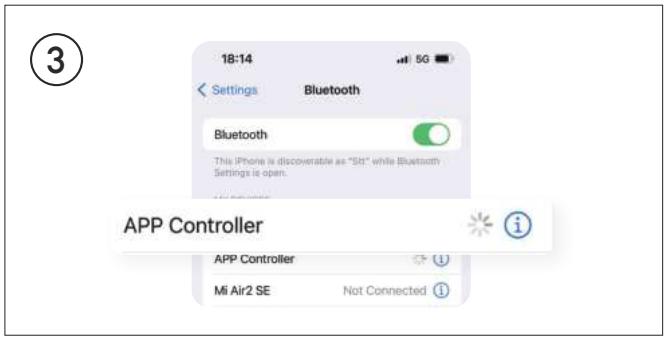

Open the phone setting page and turn on Bluetooth. Click the '**APP Controller**' to pair the Yarbo physical controller.

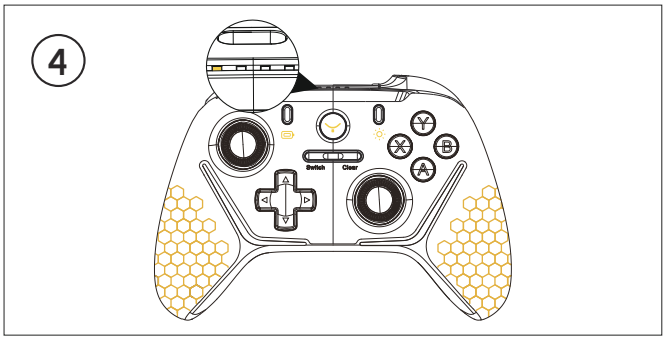

Observe the LED light on the top of Yarbo Controller. If the left yellow light is on steadily, it indicates that connected with the phone.

5.3 Yarbo Controller Holder Installation Guide

The controller holder allows users to conveniently mount their phones for real-time camera viewing, while using the physical controller to operate the core from anywhere in the world.

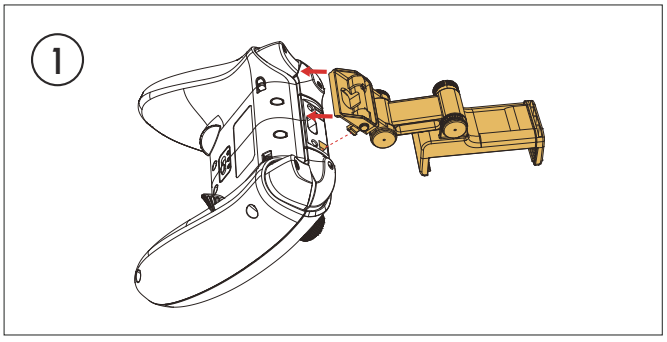

Locate the Physical Controller Holder provided in the Yarbo Core package and locate the side button on the Holder.

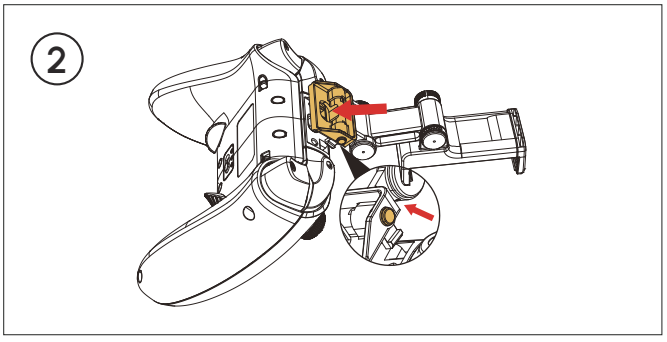

Locate the shafts and holes and press the buttons on both sides of the Holder, and then press the middle part as shown in the picture.

⚠ WARNING

- Never place the controller in the reach of children.
- Never allow unauthorized nor untrained persons to use the controller.

⚠ CAUTION

- DO NOT expose the controller to freezing temperatures for an extended duration.
- DO NOT spill water or snow on the surface of the controller. If any water or snow comes into contact with the controller, wipe it immediately.

⚠ NOTICE

- Please note that any damage or malfunction caused by or misuse of the controller will not be covered by the warranty.

5.4 LED Indicator Description

Yarbo connecting mode

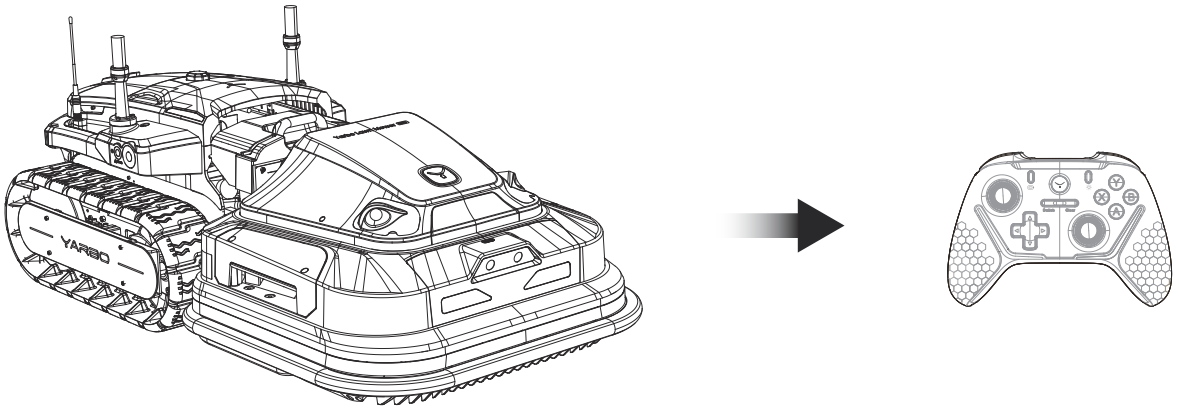

LED Indicator	Description
Two lights steady on	Controller and the Yarbo are connected successfully
Two lights flash slowly	Controller is connecting to the Yarbo
Two lights flash rapidly	Initiate the pairing of the Controller with the Yarbo

Phone connecting mode

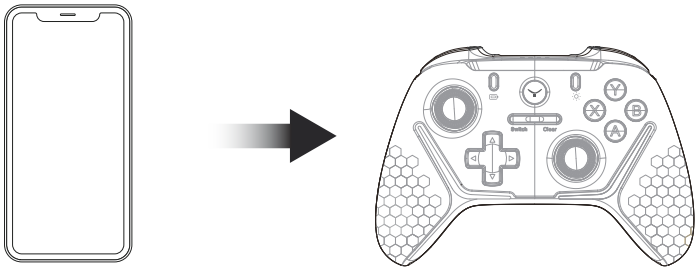

LED Indicator		Description
One light steady on		App and Controller are connected successfully
One light flash slowly		The Controller is connecting to the App
One light		Initiating the pairing of the controller with the App

Additional Notes

Four lights flash during the charging process till fully charged.

Two flashing lights indicate the battery level is low during use.

Maintenance Video

6. Maintenace Guide

6.1 Before Conducting Any Maintenance

WARNING

- Please ensure that you do not wear open-toed shoes or go barefoot when performing the following maintenance tasks.
- Always use appropriate Personal Protective Equipment (PPE). Wear protective gloves and goggles whenever performing maintenance tasks or when needed.
- Ensure that Yarbo is switched OFF and disconnects the battery when performing the following maintenance tasks.

Disconnecting Battery from Yarbo

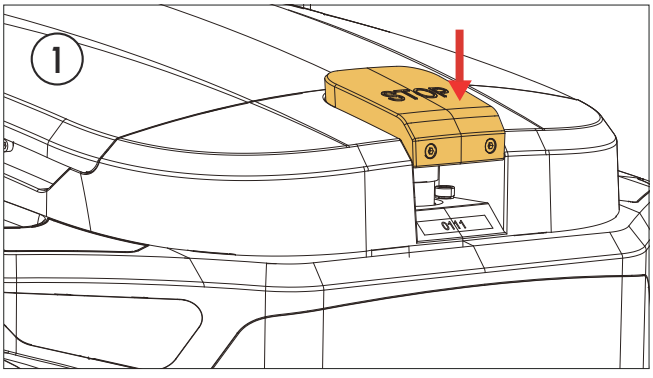

Press the Emergency Stop button first, and then shut down the Yarbo Core from the app.

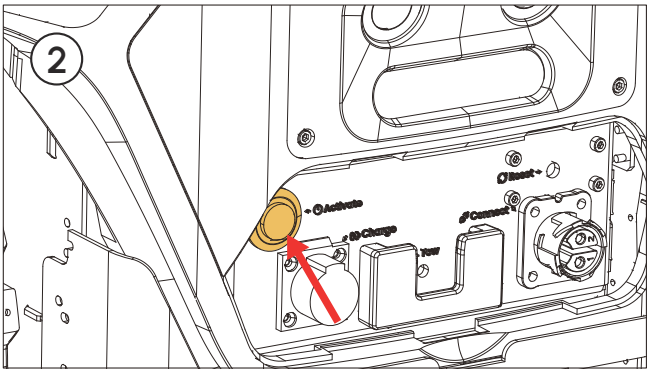

Confirm that Yarbo is turned off by checking if all the lights are switched off. For detailed instructions on how to turn off the machine, please refer to the **Yarbo App.**

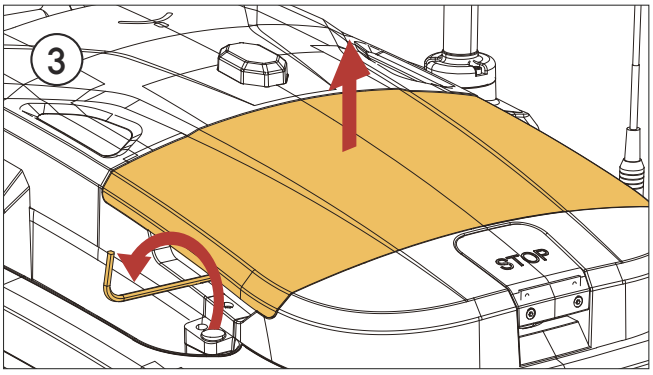

Use the Battery Cover Wrench to unscrew and remove the anti-theft screws from the existing battery cover.

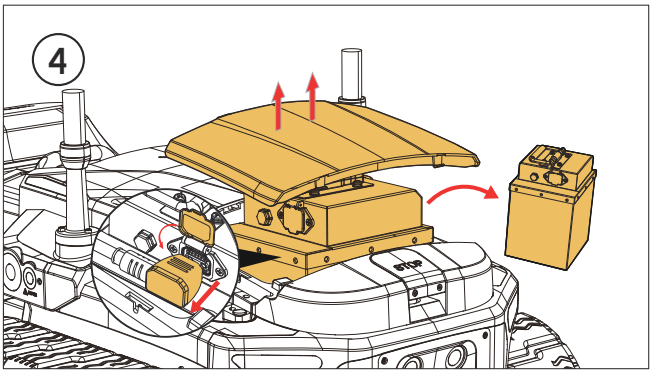

Remove the battery cover and unplug the cable connecting Yarbo and battery pack. **Remove** the battery pack and safely secure it.

6.2 Cleaning Yarbo Core

Please avoid using solvents or large amount of liquid on plastic components, as commercial solvents can potentially harm the appearance and integrity of your Yarbo. Instead, use a clean and gentle cloth or a brush to remove debris, mud, and other particles. Please avoid using the high-pressure water hose or any high pressure cleaning methods to clean the yarbo core.

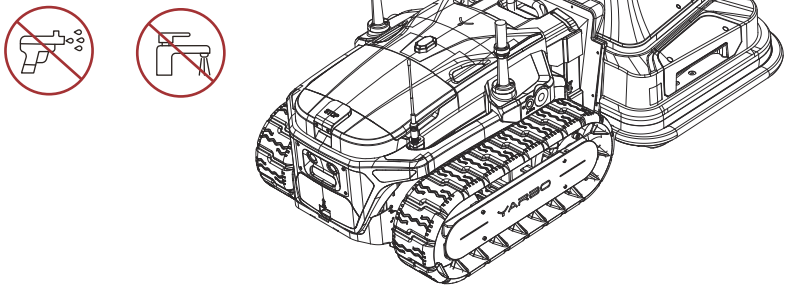

WARNING

- If the cameras used for obstacle avoidance are covered, dirty, or unclear, the visual algorithm may not function correctly. Clean the cameras regularly using a soft, dry cloth to ensure proper visibility.
- Keep the power socket away from any liquids or moisture. Do not allow the power socket to come into contact with anything wet.
- Always install the protective covers on both the power socket and module connector when not in use. This helps prevent damage from dust, water, or accidental contact.

6.3 Replacing Cutting Blades

Before Replacing the Cutting Blades on Lawn Mower Pro, please make sure you have power off the machine and ensure it is completely shut down.

6.3.1 Circular Cutting Blade

1. **Lower** the blades all the way down using the app controller.
2. **Shutdown** (Power off) Yarbo Core
3. **Detach** the lawn mower Pro module from Yarbo Core.
4. **Raise** the lawn mower module from the side and carefully place it on the **Module Vertical Stand**. Please refer to the picture shown below.
5. **Unscrew** the Cutting Blades Bolts using Phillips-Head Screwdriver provided in the lawn mower Pro module box Box content.
6. **Install** the circular cutting blades by tightening the cutting blade bolts.

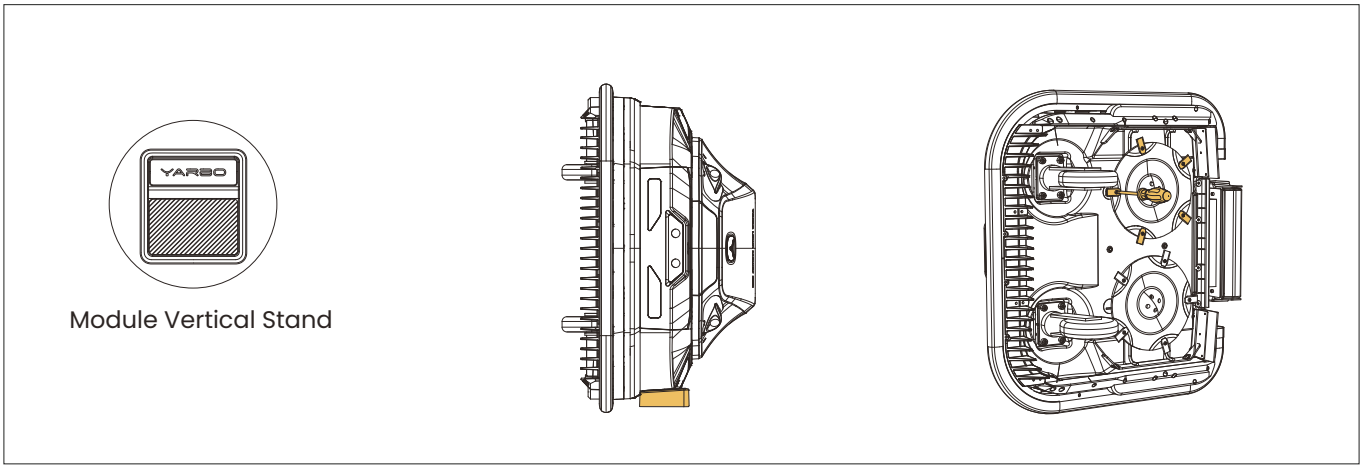

Module Vertical Stand

Remove the Old Cutting Blades

1. Carefully lift the Lawn Mower Module from the side and place it securely on the **Module Vertical Stand**. Please refer to the picture shown below.
2. Use the **Phillips-head screwdriver** (included in the Lawn Mower Pro module box) to unscrew the **Cutting Blade Bolts.**
3. **Remove** the old cutting blade by detaching it from the module.

6.3.2 Straight Cutting Blades

Before installing the straight cutting blades, make sure the old cutting blades has been removed.

Install the Straight Cutting Blades

Align the “L” and “R” blades with the markings on the module. Make sure the side labeled “This side facing grass” faces outward.

1. Align the **Screw Protection Cover** with the mounting holes on the straight blade (L or R).
2. Align the combined blade and cover with the blade mounting holes on the mower deck.
3. Insert and tighten the Straight Blade Bolts by using **Allen Key #2** to secure the blade in place.

Remove the Straight Cutting Blades

To remove the straight cutting blade, follow these steps in reverse order:

1. **Loosen and remove the Straight Blade Bolts** securing the blade to the mower deck.
2. **Detach the blade and Screw Protection Cover** from the blade mounting holes.
3. Separate the Screw Protection Cover from the blade.

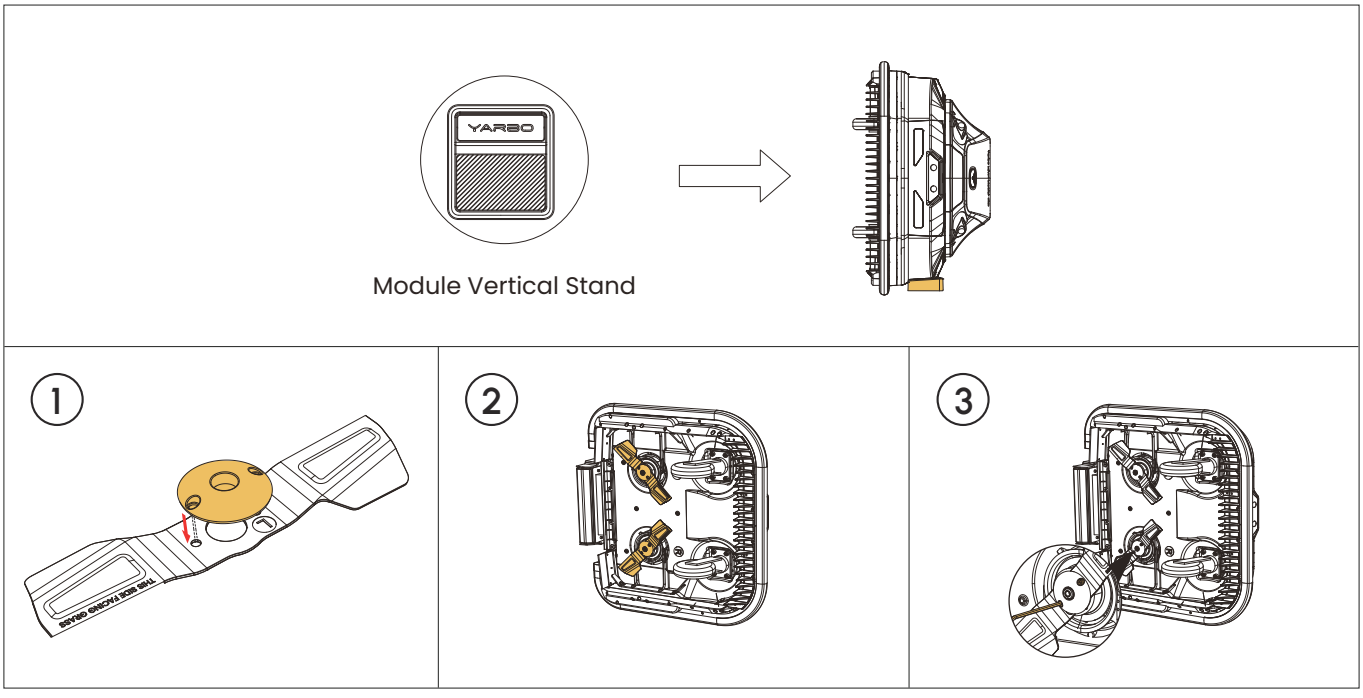

6. Maintenance Guide

⚠ NOTICE

- It is recommended to replace all cutting blades simultaneously if the mowing results are not as satisfactory as before.
- The blades are advised to be replaced every three months. However, in the case of thick grass or more frequent use, blade replacements may be needed more often.

⚠ WARNING

- Stabilize the blade disc when fastening the cutting blade bolts.
- Ensure the safety of individuals by taking necessary precautions, such as wearing gloves, while performing this procedure.

6.4 Applying Grease on the Tracks

It is crucial to apply grease regularly on the tracks to maintain smooth rotation of the drive wheel and road wheels. This is especially important during the machine's first year of use. Over time, grease may degrade and diminish, making regular refills essential. We advise applying grease every two weeks throughout the snow season. While various grease types are suitable, we recommend opting for high-vacuum grease for optimal performance. Below are the situations when immediate application of grease is needed.

- **Motion Hampered**: When you sense that your Yarbo has not been greased for a while and its motion might be hampered due to this.
- **Noisy Operation**: Unusual noise coming from the tracks indicates possible friction or wear. Applying grease can help reduce this noise by lubricating the moving parts and reducing friction.
- **Track Disengagement**: If you notice the track becoming detached from the main body during inspection, it could be due to inadequate lubrication. Greasing the tracks can help maintain a secure connection between the tracks and the main body of the machine.

⚠ NOTICE

■ The presence of debris or mud on the rubber tracks can negatively impact Yarbo's driving performance. To maintain optimal performance, make sure to clean debris and mud from the rubber tracks on a regular basis.

6.5 Updating Firmware

Ensuring optimal performance of Yarbo at the hardware level is crucial, but it's equally vital to maintain the firmware up-to-date. Regular firmware updates notification will be made available through the Yarbo App. We highly recommend utilizing the built-in Over-The-Air (OTA) technology within the Yarbo App to update the firmware as soon as new versions are released. These updates consistently enhance the capabilities of the product.

Before proceeding to update firmware, please ensure that the following conditions are met:

① The battery level is at least 30%.
② The Data Center is connected to the internet.
③ No working schedules are active within the next hour to prevent interruptions during the update process.

6.6 Keeping Battery at its Best Performance

Extended periods of inactivity can significantly diminish the performance of the battery pack. To minimize this degradation, it's important not to leave the battery pack inactive for more than three months. Lithium-ion battery packs experience slight self-discharge over time. Charging the battery pack for at least 15 minutes once every three months will suffice to maintain its activity level.

⚠ NOTICE

- The battery pack lifespan is influenced by operation frequency and total working hours. If the operating time per full charge noticeably decreases, it might be the time to consider replacing the battery pack.

7. Specification

7.1 Yarbo Lawn mower Pro Module

Item	Value
Dimensions, length*width*height	27*29*16in/691*745*406mm
Weight	32.2kg
Operational Temperature	-13°F to 113°F / -25°C to 45°C
Number of Mowing Discs	2
Number of Mowing Blade(Each Disc)	5
Noise level/db	60db
Threshold capability/cm	5cm
Maximum Climbing Capability, Slope Degree	35°
Mowing coverage / ㎡	25000 ㎡ (twice a week)
Cutting Width	20in / 50cm
Cutting Height	0.8-4 in / 20-100mm

8. Limited Warranty

8.1 Residential Warranty Coverage

Lawn Mower Pro Module

Item	Parts	Warranty Period
Motor system	Cutting Height Adjusting Motor	2 Years
	Cutting Motor	
Vision System	Camera	2 Years
	Rain Sensor	
	Ultrasonic Radar	
Consumables	Shell	1 Year
	Cutting Disc	No Warranty
	Cutting Blade	
	Caster Wheel	
	Straight Blade	

8.2 General Statement

1. Yarbo Inc. shall not be liable for compensation if it can prove one of the following circumstances:

① The product has not been put into circulation;
② When the product is put into circulation, the defect causing damage does not yet exist;
③ When the product is put into circulation, the scientific and technological level cannot yet detect the existence of defects.

2. The warranty service is valid from the date of product delivery. When requesting after-sales service, our authorized service dealer may require the original invoice or receipt containing relevant information. In the absence of proof of purchase, the warranty period will commence based on the product's manufacturing date.

3. This warranty applies exclusively to original purchasers. Replacements do not initiate a new warranty; the original warranty remains valid from the initial delivery date. It's important to note that you may be responsible for covering the delivery costs associated with return, repair, or replacement of the product.

4. Yarbo will perform a diagnostic assessment on the returned product. If the defective product aligns with our limited warranty policy, Yarbo will cover the cost of repair or replacement. However, you may be responsible for the associated delivery charges.

5. Yarbo assumes no liability for any direct or indirect consequences arising from any cause, including but not limited to loss of use or loss of profits.

6. Please be mindful that any damage resulting from inappropriate packaging, other than the standard Yarbo packaging, is the sole responsibility of the customer. If you no longer have the original packaging, you must obtain suitable packaging or consult Yarbo's technicians for proper packaging guidance.

Repair and Warranty Services:

We have established a global after-sales service team, supported by local service partners, to ensure prompt and efficient service for all our users worldwide. Our comprehensive support includes a dedicated call center and local repair centers in key markets.

To request a repair service, please send your request to **support@yarbo.com** or contact us at **+1(888)-550-6809.**

If your product is still within the free warranty period and meets the criteria for a warranty repair, the service will be provided at no charge. If your product does not qualify for free warranty repair, standard repair fees may apply.

8.3 Warranty Forfeiture

The warranty may be forfeited under the following circumstances:

1. Failure to adhere to the operating or maintenance guidelines outlined in the User Manual.

2. Neglecting to perform the prescribed battery and product maintenance procedures.

3. Modification or repair conducted by an unauthorized service provider.

4. Damages resulting from forced operation with aged or deteriorated components.

5. Damages or product malfunctions arising from the misuse of unauthorized components or accessories.

6. Damages caused by non-defective factors, including but not limited to crashes or collisions. Additionally, damages caused by manually operating the product with a low-charged or defective battery, or tampering with the seals and labels on the product.

7. Components subject to normal wear and tear, such as the auger, rubber track, belt, or other parts subjected to typical usage, are not covered by warranty. For the purchase of these items, refer to our website at www.yarbo.com/pages/contact-us or connect with an authorized service dealer.

8. Warranty coverage does not extend to products used for commercial purposes. Commercial use includes instances where the product is employed in institutions, rented out, or utilized at multiple locations.

YARBO INC.

www.yarbo.com

For Privacy Policy, please visit:
https://www.yarbo.com/legal/privacy-policy
Please note, the User Manual may be updated based on the changes in production, product specification, included contents and so on.
For the latest version of the User Manual, please visit:
https://www.yarbo.com/support

Refer to Friends & Get Rewards

Share Your Yarbo Journey

Join Yarbo Exclusive Community

+1 (888)550-6809

support@yarbo.com

1951 Ocean Avenue, Unit 3, Ronkonkoma, NY 11779 United States

V 1.5