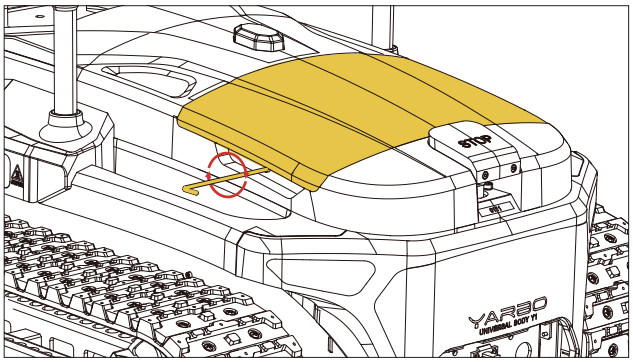

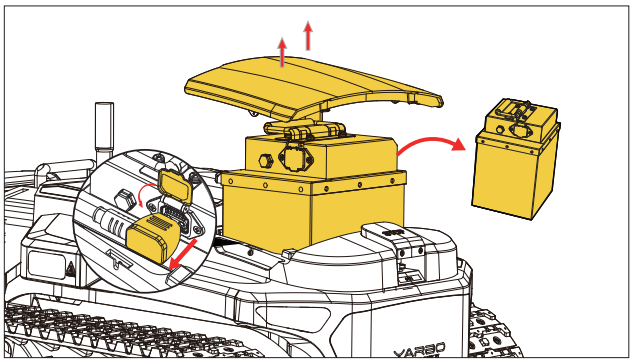

7.2 Cleaning Yarbo Core

Please avoid using solvents or large amount of liquid on plastic components, as commercial solvents can potentially harm the appearance and integrity of your Yarbo. Instead, use a clean and gentle cloth or a brush to remove debris, mud, and other particles. Please avoid using the high-pressure water hose or any high pressure cleaning methods to clean the Yarbo Core.

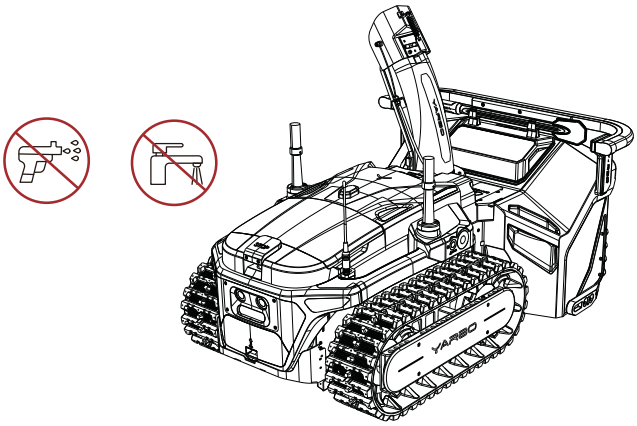

⚠ WARNING

- This statement advises that if the cameras used for obstacle avoidance is covered, dirty, or unclear, it may lead to confusion about the visual algorithms that rely on these cameras. It suggests cleaning the cameras with a soft cloth to ensure they are clear and functioning properly.
- Ensure that the power socket does not come into contact with anything wet.

7.3 Installing Tow Hitch

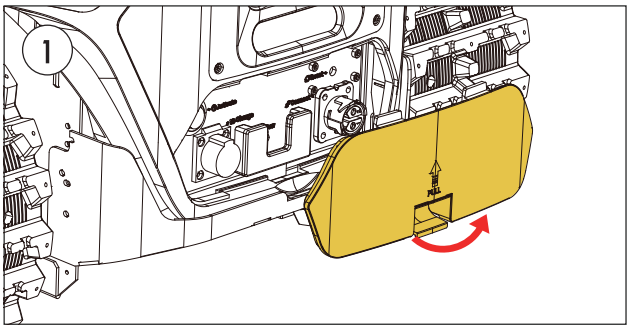

Remove the rear cover.

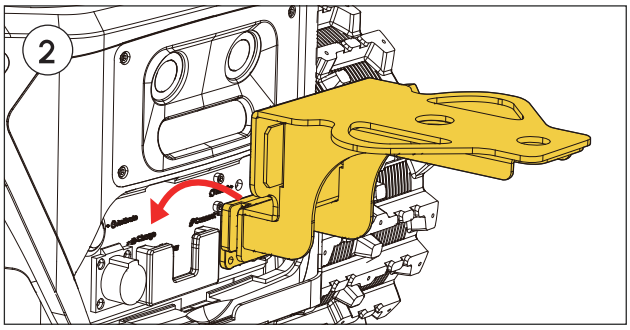

Locate the tow hitch provided in the package. Align the connection part of the tow hitch to the mount .

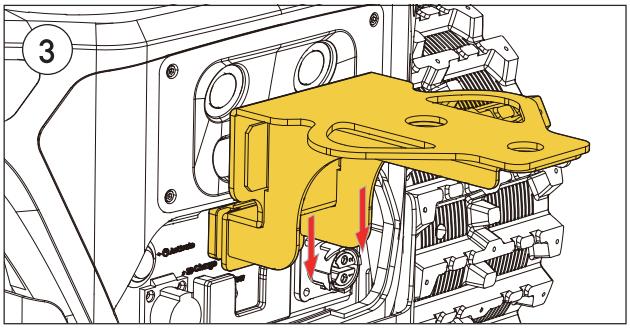

Slide the tow hitch down to the bottom of the mount.

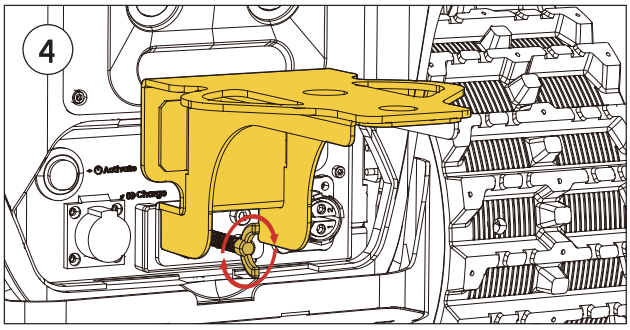

Locate the tow hitch bolt provided in the package and tighten the tow hitch by screwing the bolt. Ensure that the bolt is securely fastened to prevent any loosening while towing.

7.4 Applying Grease on the Tracks

It is crucial to apply grease regularly on the tracks to maintain smooth rotation of the drive wheel and road wheels. This is especially important during the machine's first year of use. Over time, grease may degrade and diminish, making regular refills essential. We advise applying grease every two weeks throughout the snow season. While various grease types are suitable, we recommend opting for high-vacuum grease for optimal performance. Below are the situations when immediate application of grease is needed.

- **Motion Hampered**: When you sense that your Yarbo has not been greased for a while and its motion might be hampered due to this.
- **Noisy Operation**: Unusual noise coming from the tracks indicates possible friction or wear. Applying grease can help reduce this noise by lubricating the moving parts and reducing friction.
- **Track Disengagement**: If you notice the track becoming detached from the main body during inspection, it could be due to inadequate lubrication. Greasing the tracks can help maintain a secure connection between the tracks and the main body of the machine.

⚠ NOTICE

- The presence of debris or mud on the rubber tracks can negatively impact Yarbo's driving performance. To maintain optimal performance, make sure to clean debris and mud from the rubber tracks on a regular basis.

7.5 Updating Firmware

Ensuring optimal performance of Yarbo at the hardware level is crucial, but it's equally vital to maintain the firmware up-to-date. Regular firmware updates notification will be made available through the Yarbo App. We highly recommend utilizing the built-in Over-The-Air (OTA) technology within the Yarbo App to update the firmware as soon as new versions are released. These updates consistently enhance the capabilities of the product.

Before proceeding to update firmware, please ensure that the following conditions are met:

① The battery level is at least 30%.
② Yarbo is connected to the internet.
③ No working schedules are active within the next hour to prevent interruptions during the update process.

7.6 Installing Anti-slip Studs

Intalling Anti-slip Studs

① Find the anti-slip studs provided in the content box.
② Screw the anti-slip studs on the two tracks using Socket #1.

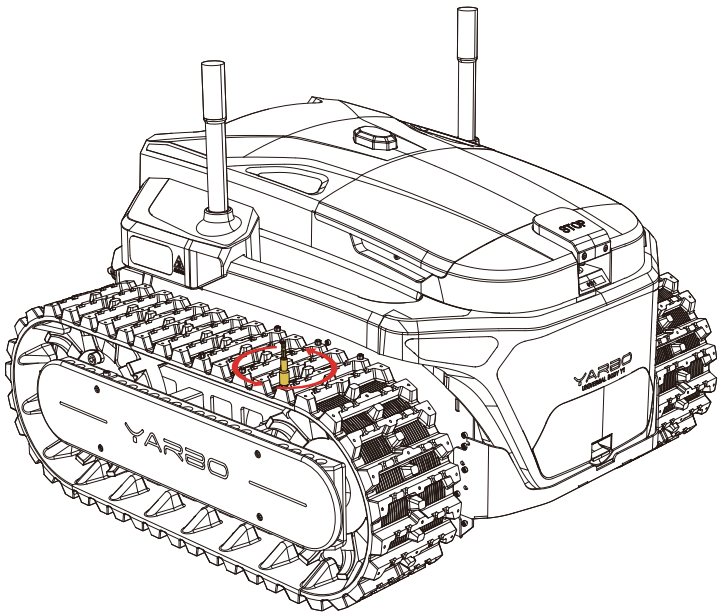

7.7 Keeping Battery at its Best Performance

Extended periods of inactivity can significantly diminish the performance of the battery pack. To minimize this degradation, it's important not to leave the battery pack inactive for more than three months. Lithium-ion battery packs experience slight self-discharge over time. Charging the battery pack for at least 15 minutes once every three months will suffice to maintain its activity level.

NOTICE

- The battery pack lifespan is influenced by operation frequency and total working hours. If the operating time per full charge noticeably decreases, it might be the time to consider replacing the battery pack.

8.Specification

8.1 Yarbo Core

Item	Value
Dimensions, length*width*height	27*22*20in/675*566*512mm
Weight, without battery pack	123.5lbs/56kg
Weight, with battery pack	145.5lbs/66kg
Operational Temperature	-13°F to 113°F/-25°C to 45°C
Towing Ability	GTW up to 3500lbs/1600kg
Module Pitching Angle	0° to 18°
Internet Access Technology	WIFI, WiFi-halow, 4G
Navigation Technology	RTK-GPS
Charging Technology	Wired, Wireless
Obstacle Avoidance Technology	Computer Vision by cameras

8.2 Yarbo Snow Blower Module

Item	Value
Dimensions (with Discharge Chute), length*width*height	29*22*29in/729*569*742mm
Dimensions (with Discharge Chute and Universal Body Y1), length*width*height	42*28*29in/1067*729*742mm
Weight	83 lbs/37.5kg
Operational Temperature	-13°F to 113°F/-25°C to 45°C
Cleaning Width	24 in/60cm
Intake Height	12in / 30cm
Throwing Distance	6ft to 40ft / 2m to 12m
Chute Rotation Angle	-10° to 190°
Deflector Angle	-5° to 50°
Operational Snow Types	Fluffy snow, dry snow, wet snow, packed snow, heavy snow.
Applicable Surface	Pavement, Brick, Stone, Concrete, Tarmac and Asphalt
Maximum Climbing Ability, percentage of slope	36%
Obstacle Avoidance Technology	Collision sensors in Bumper, Computer Vision by cameras

8.3 Yarbo Docking Station

Item	Value
Dimensions, length*width*height	25*36*3in/640*910*76mm
IP Rating	IP67
Operational Temperature	-13°F to 113°F/-25°C to 45°C
Charging Technology	Wireless Charging through embedded coils. No exposed contacts. Fully autonomous.
Charging Voltage	42V
Installation Requirement	Level surface

8.4 Yarbo Battery

Item	Value
Dimensions, length*width*height	7*6*10in / 178*152*248mm
Weight, without battery pack	22.5lbs / 10kg
Nominal Voltage	36V
Nominal Capacity	38.4Ah
Operational Temperature	-13°F to 113°F / -25°C to 45°C
Battery Management System (BMS)	Over-heating, short circuit, over-current and over-charge protection
Charging Time (0 to 100% SOC, wireless charging using Yarbo Docking Station)	About 3 hours
Charging Time (30% to 80% SOC, wireless charging using Yarbo Docking Station)	About 1 hour and 15 minutes
Charging Time (0 to 100% SOC, using Wired Charger)	About 5 hours
Charging Time (30% to 80% SOC, using Wired Charger)	About 2 hours and 20 minutes
Battery Chemistry	NCM Li-ion

9.Limited Warranty

9.1 Residential Warranty Coverage

Item	Parts	Warranty Period
Motor system	Linear Actuator	2 Years
	Driving Motor	
Power System	Lithium-ion Battery	2 Years
	Power Adapter	
	Docking Station	
Electric Control System	RTK System	2 Years
	Motherboard	
Vision System	Camera	2 Years
Consumables	Shell	1 Year
	Track	No Warranty

9. Limited Warranty

Item	Parts	Warranty Period
Motor System	Auger/Impeller Motor	2 Years
	Chute Rotation Motor	
	Deflector Motor	
Vision System	Camare	2 Years
Consumables	Skid Shoes	2 Years
	Top Chute	
	Impeller	
	Shell	
	Auger Blades	2 Years
	Belts	1 Year
	Scraper Bar	

9.2 General Statement

1. Yarbo Inc. shall not be liable for compensation if it can prove one of the following circumstances:

① The product has not been put into circulation;
② When the product is put into circulation, the defect causing damage does not yet exist;
③ When the product is put into circulation, the scientific and technological level cannot yet detect the existence of defects.

2. The warranty service is valid from the date of product delivery. When requesting after-sales service, our authorized service dealer may require the original invoice or receipt containing relevant information. In the absence of proof of purchase, the warranty period will commence based on the product's manufacturing date.

3. This warranty applies exclusively to original purchasers. Replacements do not initiate a new warranty; the original warranty remains valid from the initial delivery date. It's important to note that you may be responsible for covering the delivery costs associated with return, repair, or replacement of the product.

4. Yarbo will perform a diagnostic assessment on the returned product. If the defective product aligns with our limited warranty policy, Yarbo will cover the cost of repair or replacement. However, you may be responsible for the associated delivery charges.

5. Yarbo assumes no liability for any direct or indirect consequences arising from any cause, including but not limited to loss of use or loss of profits.

6. Please be mindful that any damage resulting from inappropriate packaging, other than the standard Yarbo packaging, is the sole responsibility of the customer. If you no longer have the original packaging, you must obtain suitable packaging or consult Yarbo's technicians for proper packaging guidance.

Repair and Warranty Services

We have established a global after-sales service team, supported by local service partners, to ensure prompt and efficient service for all our users world-wide. Our comprehensive support includes a dedicated call center and local repair centers in key markets.

To request a repair service, please send your request to **support@yarbo.com** or contact us at **+1(888)-550-6809**.
If your product is still within the free warranty period and meets the criteria for a warranty repair, the service will be provided at no charge. If your product does not qualify for free warranty repair, standard repair fees may apply.

9.3 Warranty Forfeiture

The warranty may be forfeited under the following circumstances:

1. Failure to adhere to the operating or maintenance guidelines outlined in the User Manual.
2. Neglecting to perform the prescribed battery and product maintenance procedures.
3. Modification or repair conducted by an unauthorized service provider.
4. Damages resulting from forced operation with aged or deteriorated components.
5. Damages or product malfunctions arising from the misuse of unauthorized components or accessories.
6. Damages caused by non-defective factors, including but not limited to crashes or collisions. Additionally, damages caused by manually operating the product with a low-charged or defective battery, or tampering with the seals and labels on the product.

7. Components subject to normal wear and tear, such as the auger, rubber track, belt, or other parts subjected to typical usage, are not covered by warranty. For the purchase of these items, refer to our website at www.yarbo.com/pages/contact-us or connect with an authorized service dealer.
8. Warranty coverage does not extend to products used for commercial purposes. Commercial use includes instances where the product is employed in institutions, rented out, or utilized at multiple locations.

YARBO INC.

www.yarbo.com

For Privacy Policy, please visit:
https://www.yarbo.com/legal/privacy-policy
Please note, the User Manual may be updated based on the changes in production, product specification, included contents and so on.
For the latest version of the User Manual, please visit:
https://www.yarbo.com/support

Refer to Friends & Get Rewards

Share Your Yarbo Journey

Join Yarbo Exclusive Community

+1 (888)550-6809

support@yarbo.com

1951 Ocean Avenue, Unit 3, Ronkonkoma, NY 11779 United States

V 1.0