YARBO

2024

USER MANUAL

YARBO SNOW BLOWER

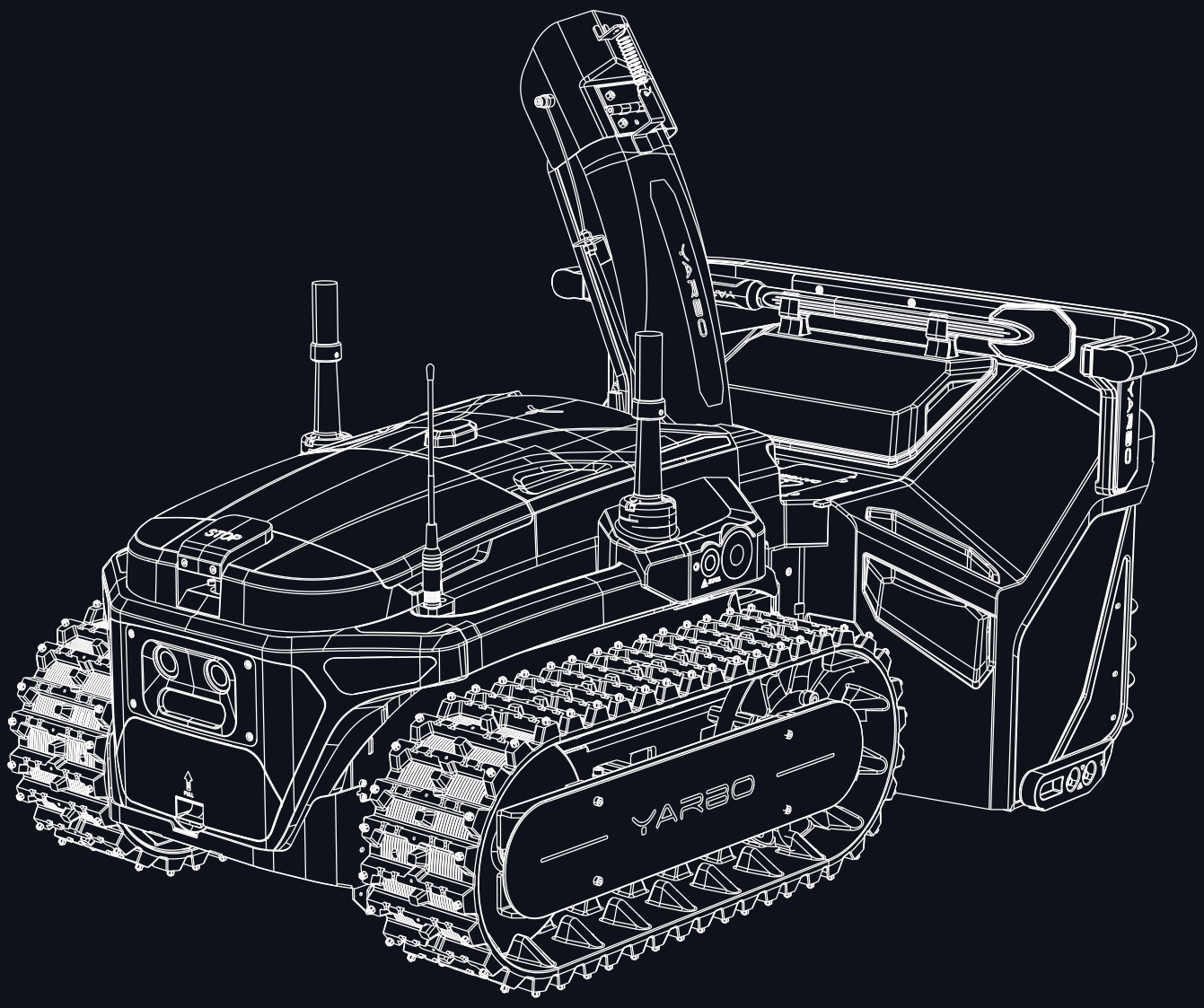

User Manual

Video Assembly Gu

YARBO

TABLES OF CONTENT

Welcome

Box Content Introduction

1.1 Yarbo Core Box Content 01
1.2 Snow Blower Module Box Content 03
1.3 Docking Station Box Content 04
1.4 Battery Box Content 04
1.5 Product Overview 05

Installation Guide

2.1 Assembling Snow Blower 07
2.2 Installing Yarbo App 12
2.3 Installing the Data Center 13
2.4 Installing the Docking Station 27

Yarbo App

3.1 Features Statement 28

TABLES OF CONTENT

Physical Controller Instruction

4.1 Connecting Yarbo Controller 31
4.2 Yarbo Controller Holder Installation Guide 33

Optional Operation

5.1 Removing Skid Shoes 38
5.2 Removing Anti-slip Studs 39
5.3 Removing the Snow Plume Diverter 40
5.4 Removing Snow Blower Protection Fence 41
5.5 Track Replacement 42

Charging

6.1 Charging Yarbo With Wired Charger 44
6.2 Charging Yarbo With Docking Station 45

Maintenance Guide

7.1 Before Conducting Any Maintenance 46
7.2 Cleaning Yarbo Core 47
7.3 Installing Tow Hitch 48
7.4 Applicating Grease on the Tracks 49
7.5 Updating Firmware 49
7.6 Installing Anti-slip Studs 50
7.7 Keeping Battery at its Best Performance 51

Specification

8.1 Yarbo Core 52
8.2 Yarbo Snow Blower Module 53
8.3 Yarbo Docking Station 54
8.4 Yarbo Battery 55

Limited Warranty

9.1 Residential Warrant Coverage 56
9.2 General Statement 58
9.3 Warranty Forfeiture 59

TABLES OF CONTENT

Welcome



Thank you for purchasing Yarbo Snow Blower. We are more than happy to welcome you to our user community. We understand your anticipation for this long-awaited yard robot to free yourself and your family members from the annoying cleaning routine. Before you start using our product, we kindly ask you to thoroughly read this user manual, especially the sections on how to use Yarbo safely and identify potential hazards.

1. Box Content Introduction

1.1 Yarbo Core Box Content ❶❷❸

❶

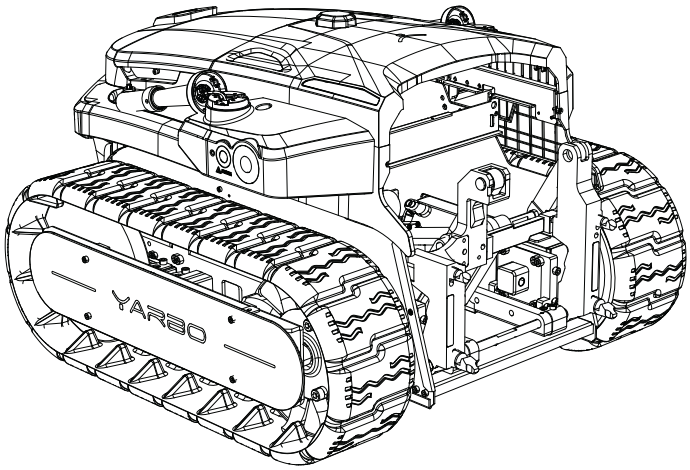

Yarbo Core



Data Center



Snow Blower User Manual



Snow Blower Quick Start Guide

❷

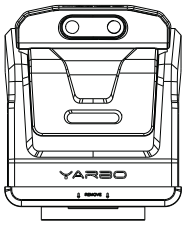

Smart Assist Module

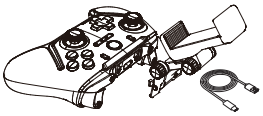

Physical Controller & Controller Holder & Controller Power Adapter

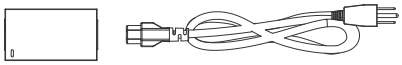

POE Power Adapter

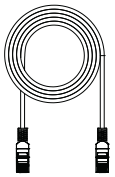

2 meter Ethernet Cable

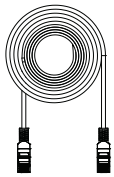

30 meter Ethernet Cable

1. Box Content Introduction

❸


Allen Key #1


Allen Key #2


Allen Key #3


Allen Key #4

Grass Pegs Screwdriver Head


x3
Grass Pegs for Mount


Battery Cover Wrench


x2
Anti-theft Screws for Battery Cover


L-Shaped Socket Wrench for Track


x20
Data Center Cable Clip


x3
Wood Nails for Mount


Screwdriver Head for Wood Nails



Spare Screws


x3
Expansion Bolts for Mount


x7
Connection Bolts for Pole


x1
T-joint of Data Center


x1
T-joint Cap


Track Wrench


Extension Pole of Data Center

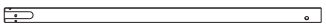
Standard Pole of Data Center


Data Center Mount


x2
Tow Hitch Screws


RTK Antenna for Data Center


Tow Hitch


x6
Low RTK Antenna Mount Bolts


x4
Low RTK Antenna Mount Connection Bolts

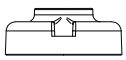
x2
Low RTK Antenna Mount


Screwdriver for Low RTK Antenna Mount Connection Bolts


x2
Simple Wrench

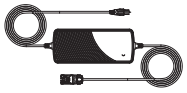
Wire charger


x6
High RTK Antenna Mount Bolts

Bluetooth Antenna for Data Center


HaLow Antenna for Rover

HaLow Antenna for Data Center

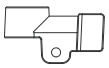
Halow Antenna for Data Center Clip


Clevis Pin


Clip bushing


R-clip

1. Box Content Introduction

1.2 Snow Blower Module Content ❶❷❸

❶

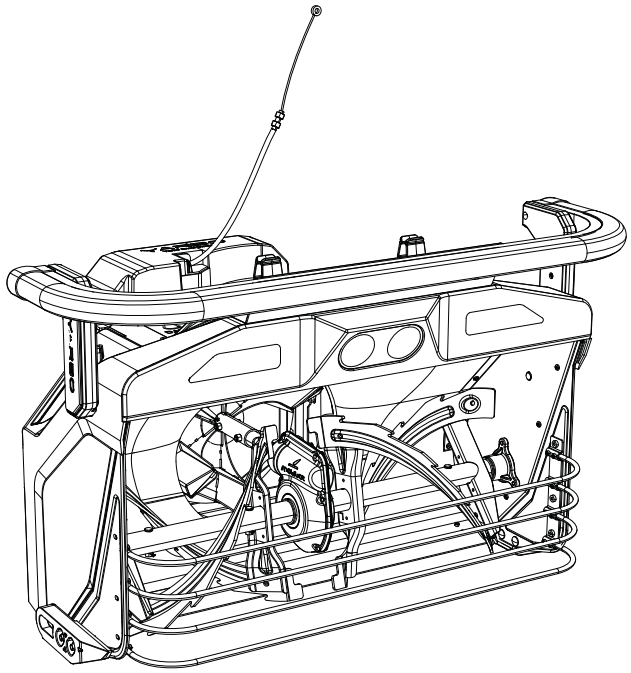

Snow Blower Module

❷

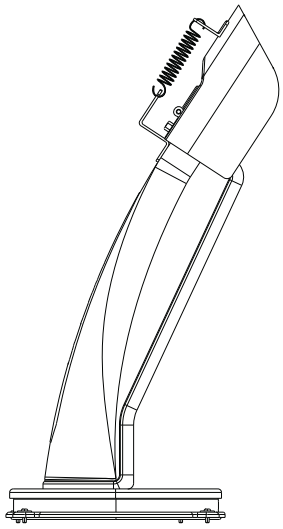

Snow Chute

❸



Snow Plume Diverter



x5

Anti-slip Studs



x4

Cotter Pins



x4

Shear Pins



Socket #1



Socket #2



Simple Wrench



Snow Shovel

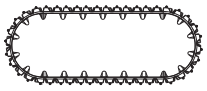

Snow Track



x4

Snow Chute Connection Bolts



x2

Plume Diverter Connection Bolts

1.3 Docking Station Box Content ❶❷

❶

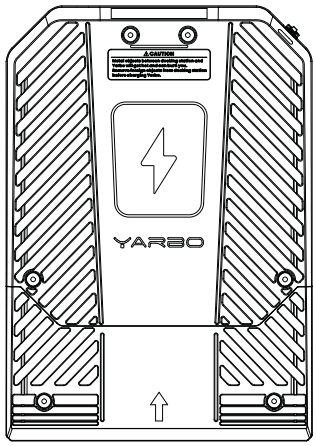

Docking Station Charging Unit

❷



x12
Grass Pegs



Power Cable for Docking Station



x12
Expansion Bolts for Docking Station



Short Cable Ramp



Long Cable Ramp

1.4 Battery Box Content ❶

❶

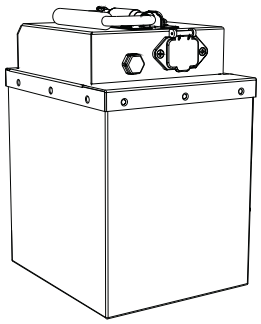

Battery

1.5 Product Overview

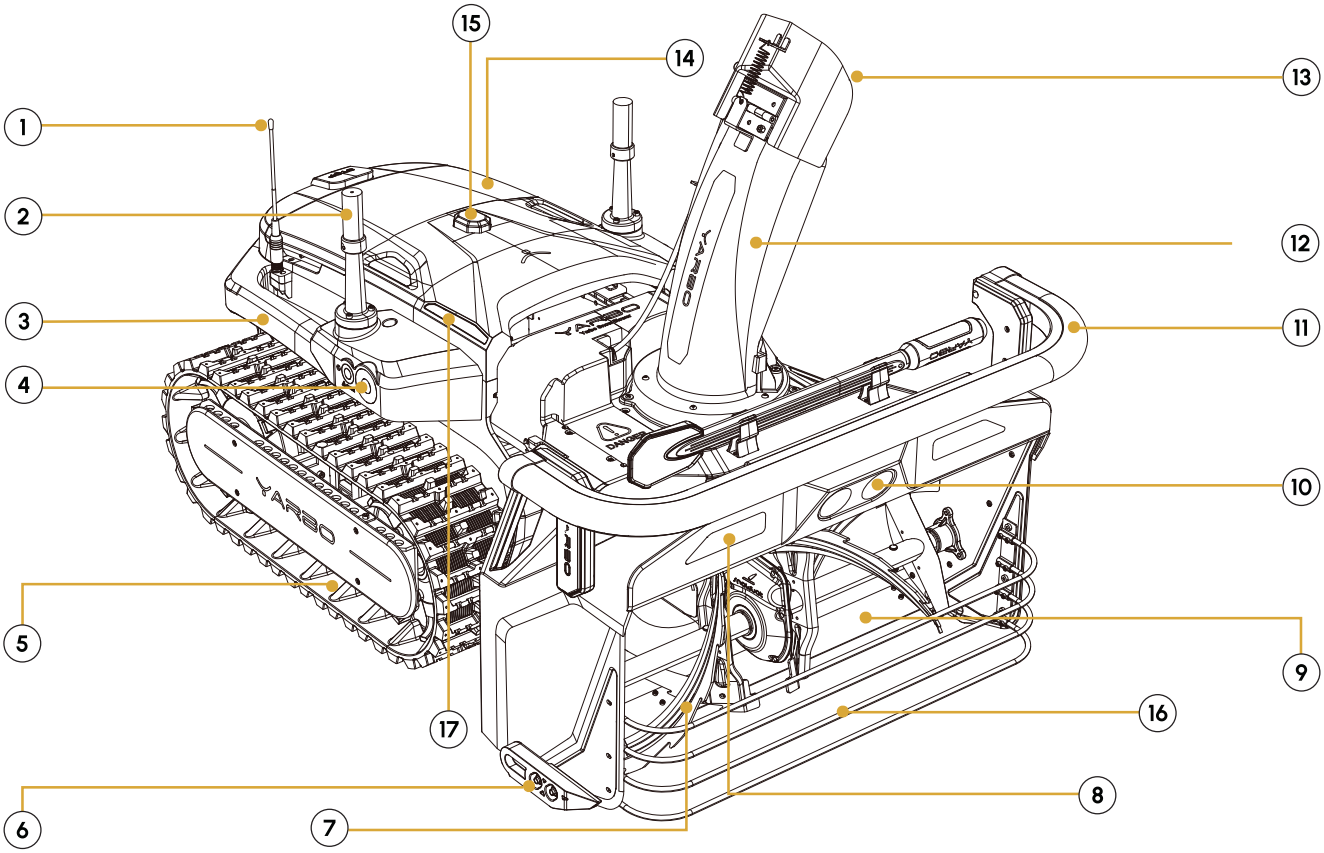

(1) HaLow Antenna	(2) RTK Antenna	(3) Lifting Handle	(4) Side Camera	(5) Track
(6) Skid Shoe	(7) Auger	(8) Front Light	(9) Scraper Bar	(10) Front Camera
(11) Bumper	(12) Chute	(13) Deflector	(14) Battery Cabin	(15) Warning Light
(16) Protection Fence	(17) Indicator Light			

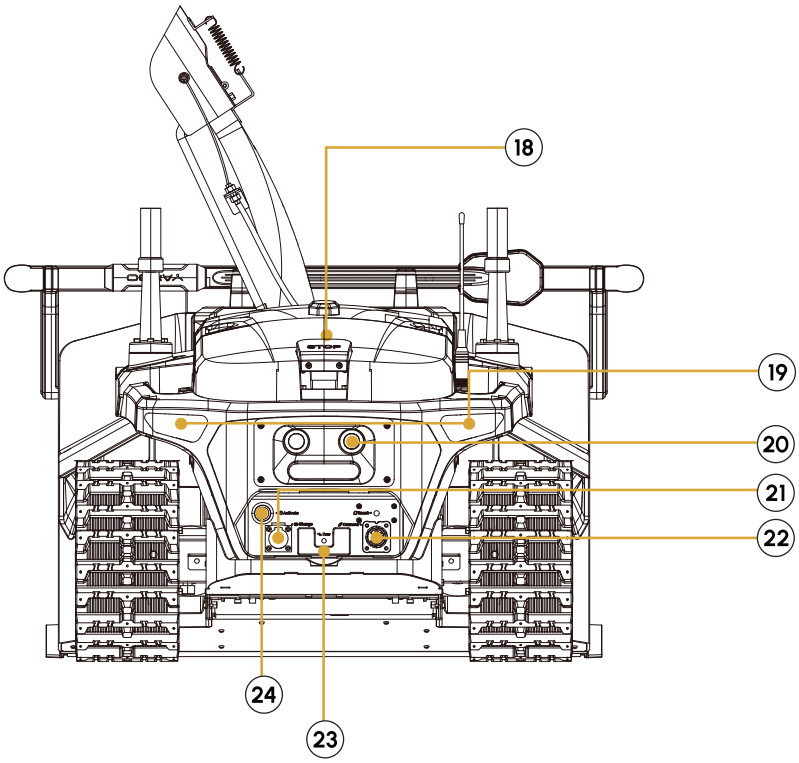

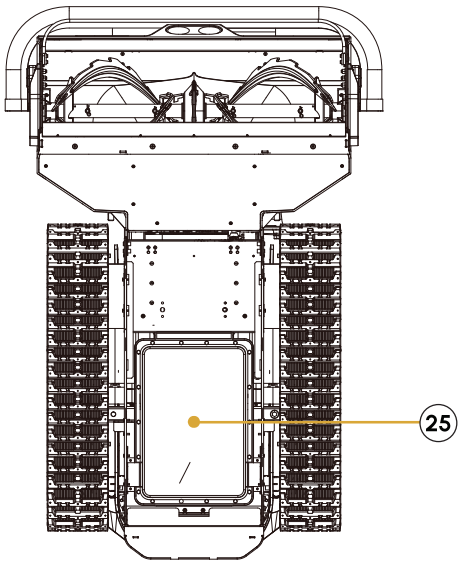

(18) Emerency Button
(19) Rear Lights
(20) Rear Camera
(21) Wired Charging Port
(22) Power Socket
(23) Tow Hitch Mount
(24) Power Switch
(25) Wireless Charging Receiver

Data Center

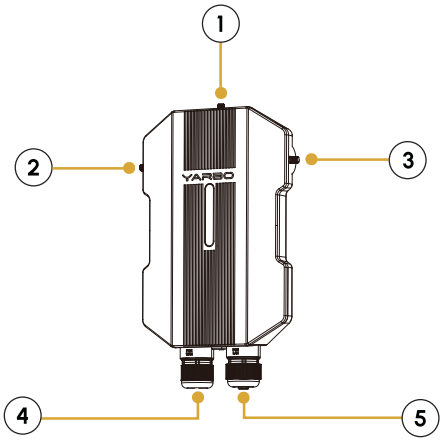

(1) RTK Antenna Port
(2) HaLow WiFi Antenna Port
(3) Bluetooth Antenna port
(4) POE WAN Port
(5) POE LAN Port

2.Installation Guide

2.1 Assembling Snow Blower

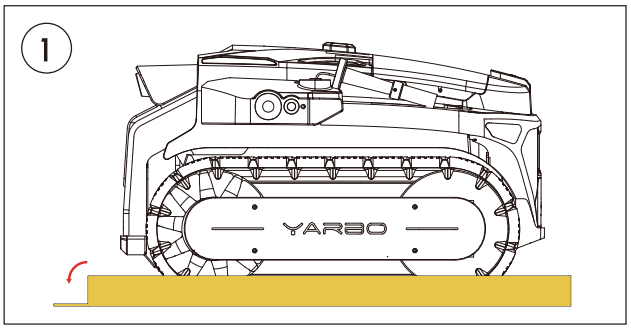

Cut the box along the cutting line on the bottom of the packaging box.

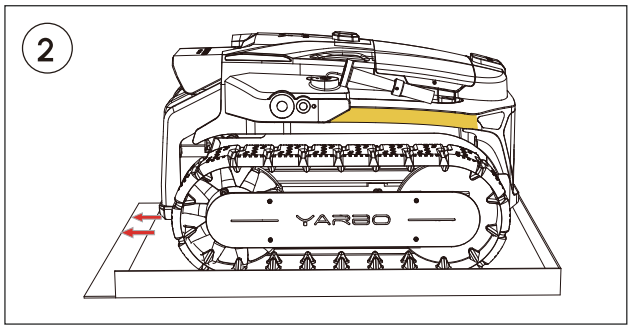

Grasp the lifting handles of the Yarbo Core and **push** the Yarbo Core out from the packaging box.

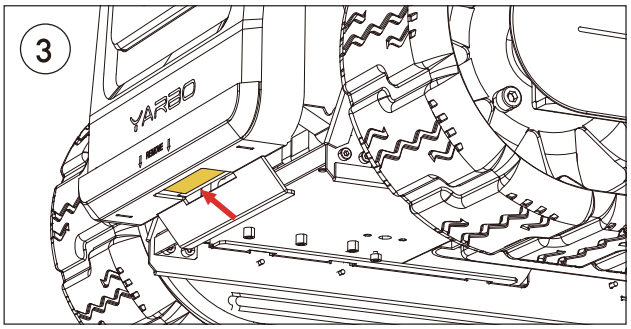

Locate the button of the Smart Assist Module shown in the picture.

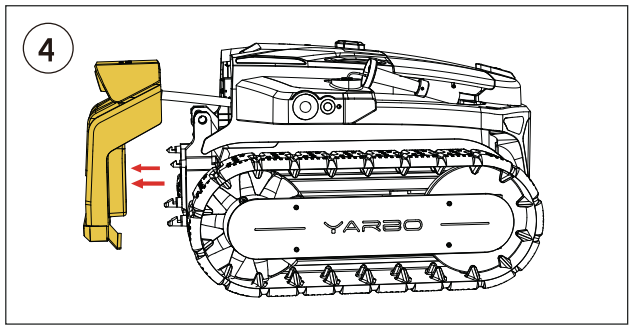

Long press the same button as **step 3** and gently **remove** the Smart Assist Module from the Yarbo Core.

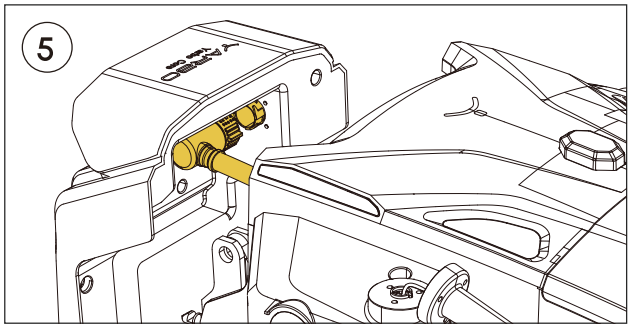

Gently remove the connection cable from the Smart Assist Module.

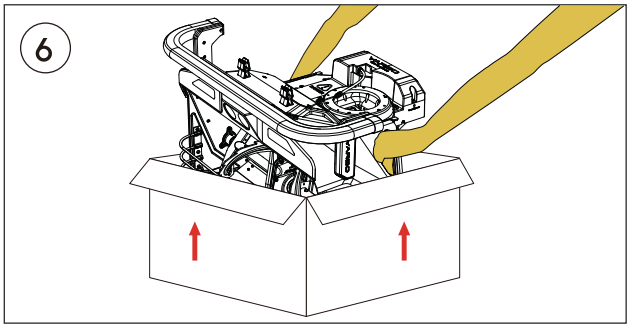

Carefully **lift** the Snow Blower Module out of the packaging box by grasping the handle at the **two sides** of the module.

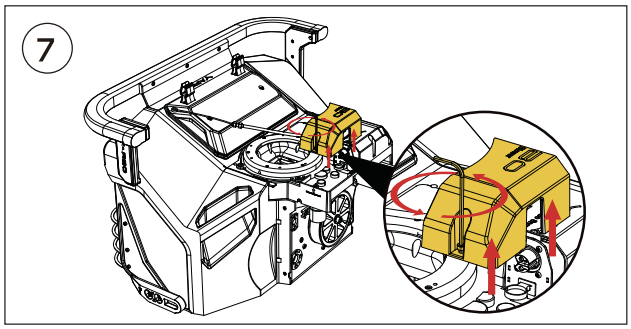

Remove cable protection cover by unscrewing the one connection screw using Allen Key #2.

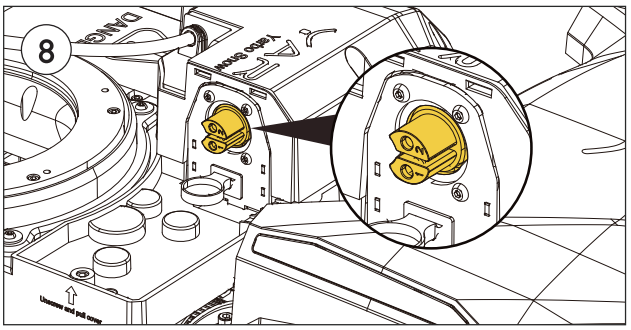

Locate the connection port under the protection cover removed in the **last step**.

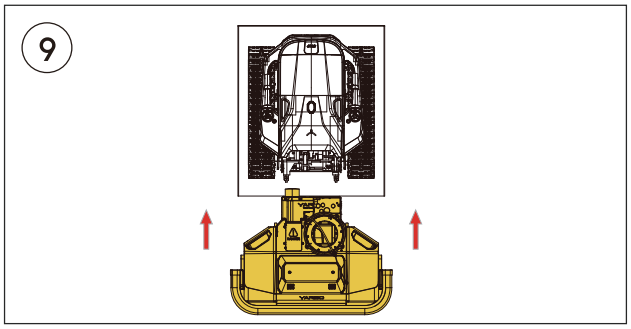

Position the Snow Blower Module next to the Yarbo Core and make sure they are close to each other. Do not connect these two parts now.

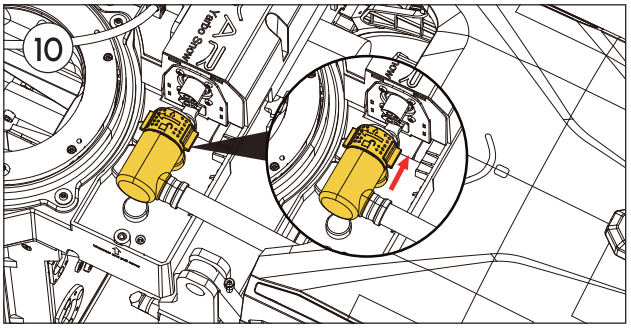

Locate the connection cable from the Yarbo Core and forcefully insert the connection cable to the port in the Snow Blower Module until you hear or feel a click.