① **Docking Station**: The docking station for Yarbo serves a dual purpose: it acts as the charging station, indicated by a green battery symbol on the map, and it also serves as the designated starting point for the execution of the work plan. In the event that the docking station needs to be relocated, it is imperative that the new position should be updated on the map by clicking to reinstall the docking station.

② **Pathway**: A pathway is designed to be a narrow lane that connects the two elements. A pathway can connect the docking station and the working area. At the same time, it can also connect two working areas as shown in the map.

③ **Working Area**: The working area refers to the specific zone where you intend Yarbo to perform snow blowing operations. This area must be fully enclosed and cannot exist independently without a pathway connecting it to the docking station. As a user, you don't need to specify the route for Yarbo when it is in operation. The only step required is to mark the boundary of the working area by driving the Yarbo along the perimeter.

④ **No-go Zone**: The "No-go zone" refers to enclosed areas within the working area where you do not want Yarbo to enter. Typically, these areas include the swimming pool, flowerbeds, restricted areas, and large obstacles that may obstruct Yarbo's normal operation.

⑤ **Sidewalk**: A sidewalk refers to a narrow path that is as wide as the vehicle itself. Unlike a pathway, a sidewalk does not need to connect to other map elements at both ends. One end of the sidewalk can remain unconnected, terminating in an empty space.

2.Work plan

The Work Plan feature is designed to help users create their own snow blowing schedules. Each work plan can be customized by choosing one or more elements on the map. In other words, users can create different work plans that include different elements on the same map. The purpose of creating different work plans is to ensure that different elements can have different working schedules.

3.Schedule

The Schedule feature empowers users to establish precise working time slots and work frequencies for the created work plan. Each schedule can only be linked with one work plan at a time, ensuring clarity and efficiency in task management. By utilizing schedules, users can enjoy 100% hands-free activities in alignment with their specific requirements.

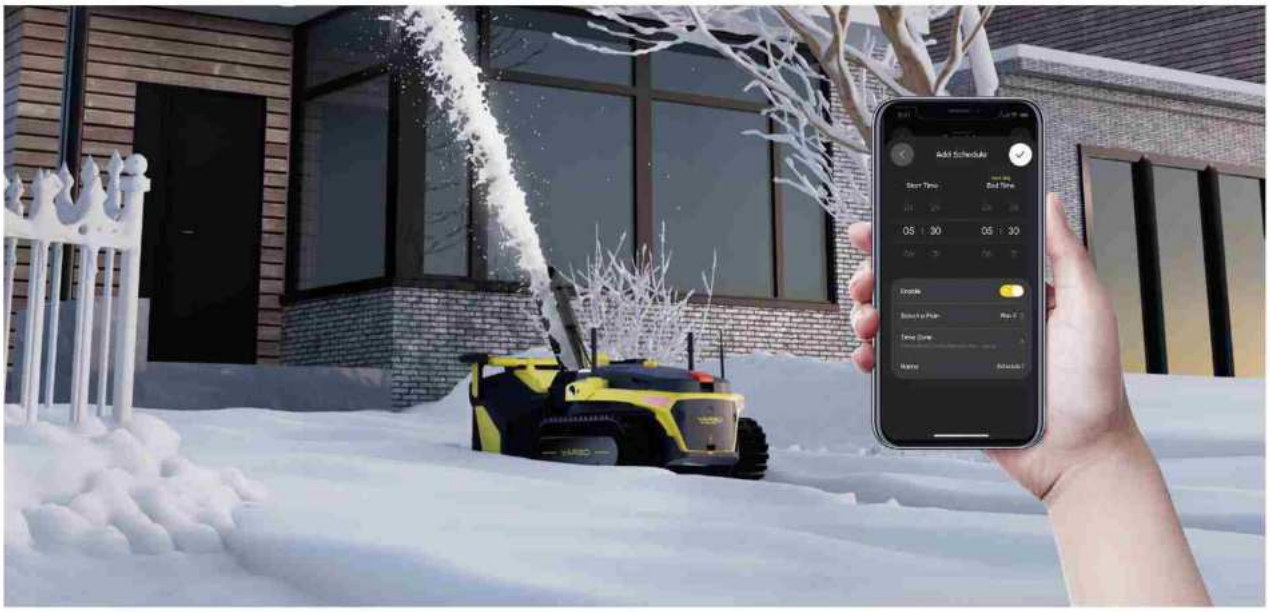

4.Physical Controller Instruction

Physical controller is an alternative method for controlling Yarbo. This section aims to provide basic instructions for operating the Yarbo using the physical controller.

4.1 Connecting Yarbo Controller

4.1.2 Connecting physical controller to Yarbo

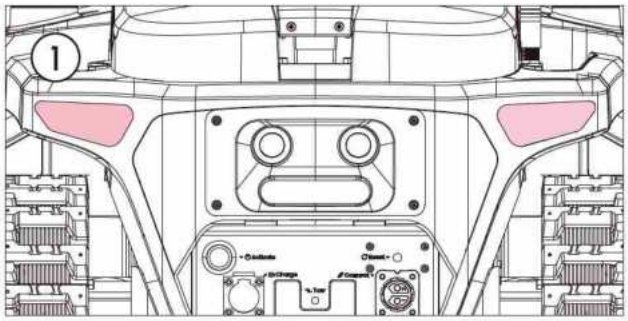

Before proceeding, ensure that Yarbo is powered on. A solid red light on the Yarbo (shown on following figure) indicates that Yarbo is powered on and ready for the controller setup.

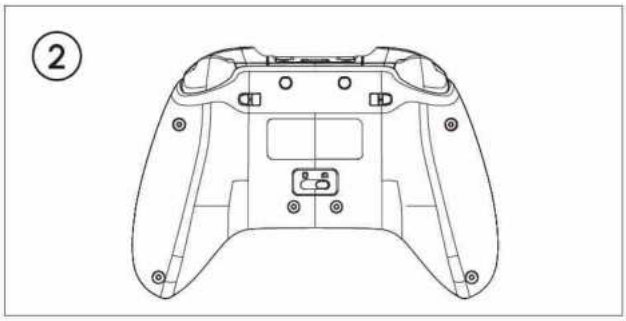

Make sure the slide switch is slid to the right side.



Short press the Yarbo Logo Button to power on the physical controller.



Observe the LED light on the top of Yarbo Controller. If the yellow light is on steadily, it indicates that the physical controller has been successfully connected.



To gain the authority of physical controller, hold the Switch button for 2-3s to gain the authority.
Once Yarbo gains authority, you can control the yarbo now.

4.1.3 Connecting physical controller to mobile phone

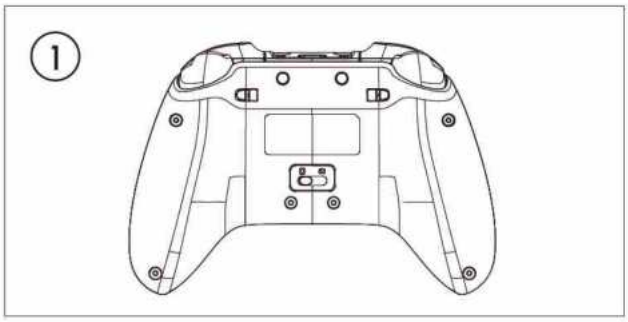

Make sure that the slide switch is slid to the left side.



Press and hold the Yarbo Logo Button for approximately 5 seconds to turn on the physical controller and initiate the pairing mode.



Open the phone setting page and turn on Bluetooth. Click the '**APP Controller**' to pair the Yarbo physical controller.



Observe the LED light on the top of Yarbo Controller. If the left yellow light is on steadily, it indicates that connected with the phone.

4.2 Yarbo Controller Holder Installation Guide

We offer an additional controller holder for our users, allowing them to conveniently place their mobile phones on the holder to see the camera view on-time.

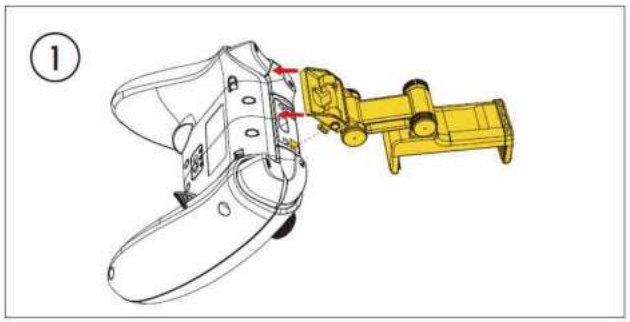

Locate the Physical Controller Holder provided in the Yarbo Core package and locate the side button on the Holder.

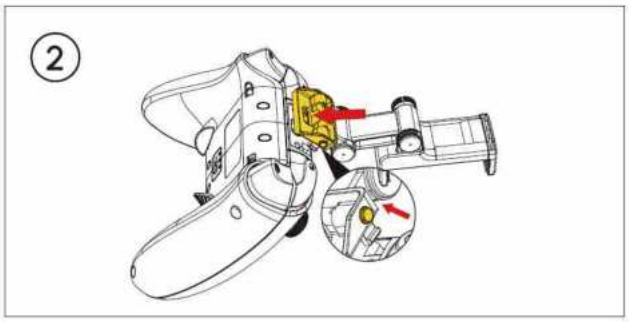

Locate the shafts and holes and press the buttons on both sides of the Holder, and then press the middle part as shown in the picture.

⚠ WARNING

- Never place the controller in the reach of children.
- Never allow unauthorized nor untrained persons to use the controller.

⚠ CAUTION

- DO NOT expose the controller to freezing temperatures for an extended duration.
- DO NOT spill water or snow on the surface of the controller. If any water or snow comes into contact with the controller, wipe it immediately.

⚠ NOTICE

- Please note that any damage or malfunction caused by or misuse of the controller will not be covered by the warranty.

Yarbo Logo Button:

This button power on the controller. To power on the controller, press and hold the **Logo button for 1-2 seconds**. For powering off, long press the **logo buttons for 3 seconds.**

Battery Level

Press the Battery Indicator Button (refer to the picture on the next page) to check the battery level of the controller. The four LED lights on the top of the controller indicate the battery status.

Light 1 stays on indicates battery level is 1%-25%.
Lights 1 and 2 stay on indicates battery level is 26%-50%.
Lights 1, 2, and 3 stay on indicates battery level is 51%-75%.
All lights (1, 2, 3, and 4) stay on indicates handle battery level is 76%-100%

4.Physical Controller Instruction

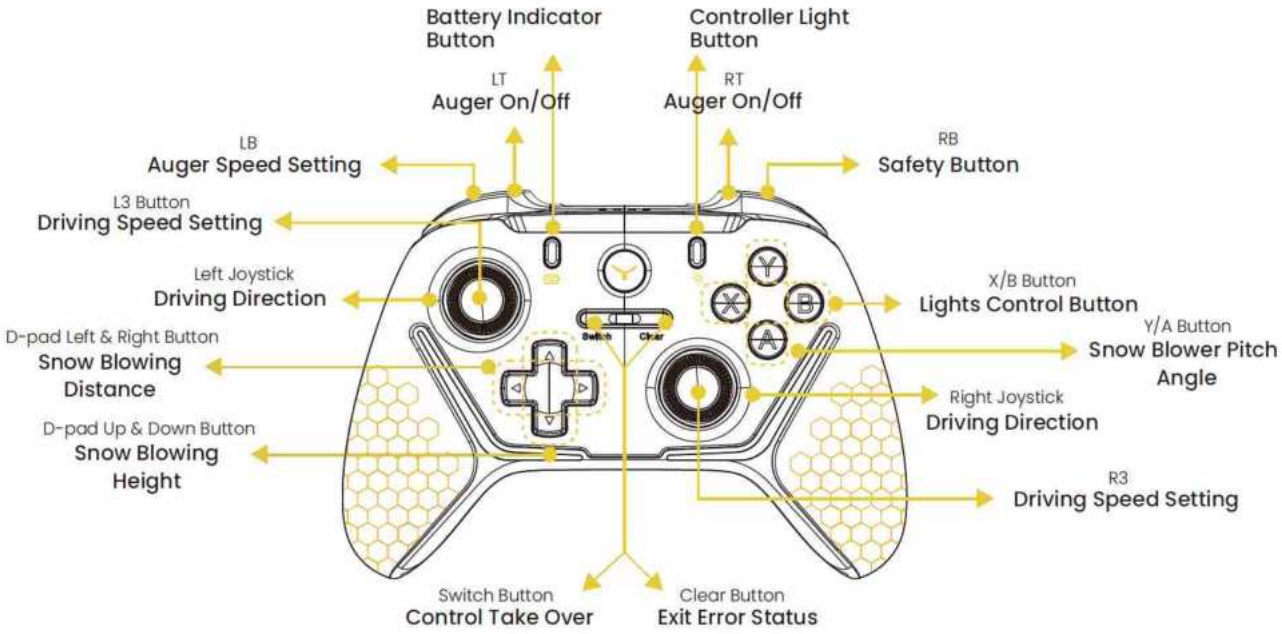

Button Introduction:

Yarbo Logo Button:

Logo button can be used to power on or off the controller. To power on the controller, short press the **Logo button for 1 second**. To power off, press the **Logo buttons for 3 seconds**. If the controller is not in use, it will automatically power off after 5 minutes.

Switch & Clear Button:

Long press the switch button for seconds to take over the control authority. Once the physical controller gains authority, the users can operate the snow blower.

Short press the switch or clear button to exit the error mode. When Yarbo encounters the dangers or stuck by any obstacles, it will stop and enters the error mode. After the dangers are cleared, pressed the start or clear button to exit the erorr mode.

RB (Safety button):

RB are designed as safety button, which means that one of the buttons shoule be pressed throughout most of the operation that may cause dangerous result. Except for the X/A/B/Y buttons and D-pads, the rest of the function buttons must be pressed with the safety button to execute their own functions.

Left Joystick and Right Joystick:

These two joysticks control the direction of movement and speed of the robot.Press the safety button LB and rotate the stick around to control Yarbo's movement in any direction. Press the left and right stick vertically down to switch between two-speed settings (L3, R3 button).

LT or RT button:

LT and RT at the same time press 3s to turn on the auger, LT and RT at the same time release to turn off the auger

⚠ WARNING

- Always ensure that the surrounding environment is safe for auger operations. Make sure you are at least 17 feet away from Yarbo before you turn on the auger.

LB button:

Short press the LB button to control the speed of the auger. There are two modes of speed that users can choose, but the slow mode is set by default. By default, it starts at the lowest speed.

4.Physical Controller Instruction

⚠ WARNING

- To toggle the auger speed, the auger must be turned on first, which means that this button is not functioning when the auger is not in operation.

Directional Pad (D-pad):

Press the left and right buttons to control the snow discharging direction. Press the up and down button to control the snow blowing direction.

Y Button:

This button controls the snow blower module to pitch up. Press and hold the button to continuously pitch up the snow blower moduleuntil it reaches the highest position. Release the button to stop at the current angle.

A Button:

This button controls the snow blower module to pitch down. Press and hold the button to continuously pitch down the Snow Blower Module until it reaches the lowest position. Release the button to stop at the current angle.

B Button:

Press this button to turn on and off the front lights (default setting is on).

X Button:

Press this button to turn on and off all the lights(default setting is on).

5.Optional Operation

5.1 Removing Skid Shoes

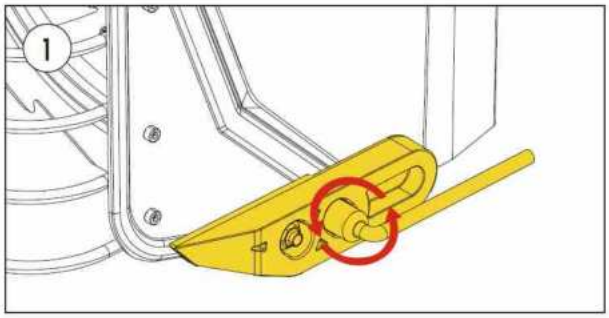

Locate Socket #2, which is provided in the package, and find the location for the skid shoes.

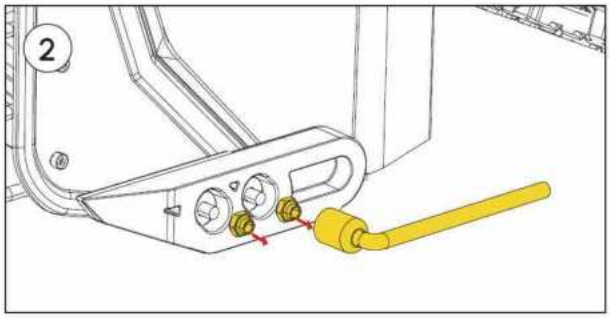

Unscrew the two bolts in one of the skid shoes.

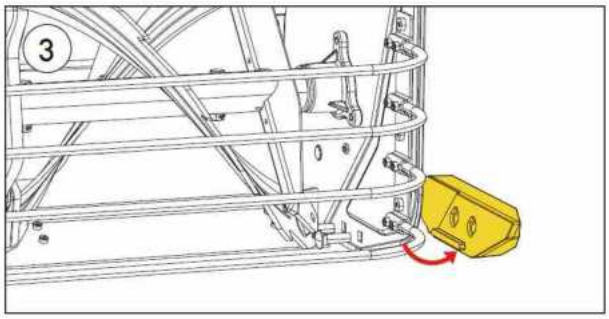

Take off the skid shoe. Please ensure that the skid shoes are stored safely as they may be required for future use.

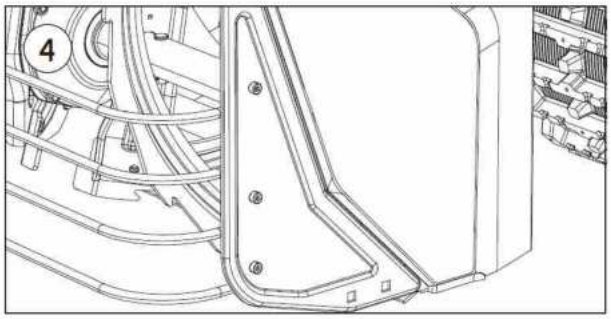

Please repeat the entire process and remove the skid shoe from the other side.

5.2 Removing Anti-slip Studs

Anti-slip studs are designed to prevent tracks from slipping and to increase the friction between the track and the surface it traverses. They are crucial for maintaining the stability and maneuverability of Yarbo, especially in adverse conditions.
If there are special circumstances that require the removal of anti-slip studs, such as using the track for lawn mowing, please follow the following step to remove the studs.

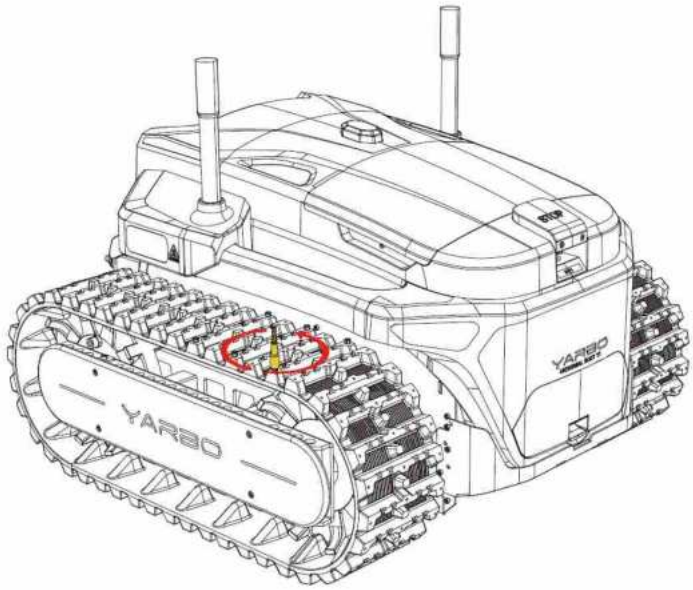

Loosen all the anti-slip studs on the track with Socket #1 or any electronic tools(not provided).

5.3 Removing the Snow Plume Diverter

The Snow Plume Diverter should be removed when Yarbo is dealing with wet snow. The purpose of the Snow Plume Diverter is to provide a stream of snow when throwing common types of snow. When the snow is wet, this device can make the impeller and the chute more likely to clog. Shut down Yarbo completely before removing the Snow Plume Diverter.

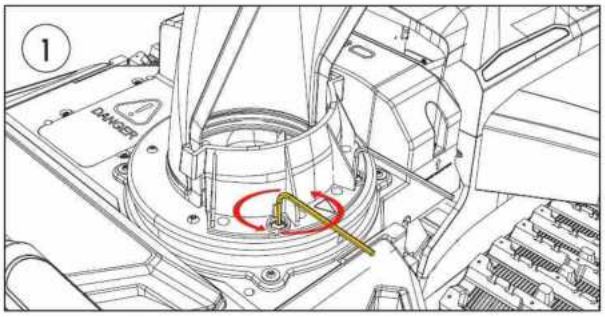

Unscrew and Remove the two Snow Plume Diverter connection bolts using Allen Key #2.

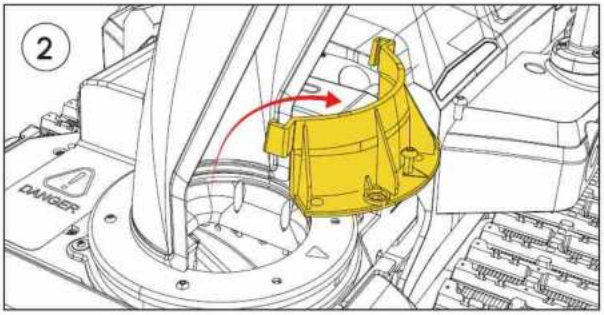

Remove the Snow Plume Diverter.

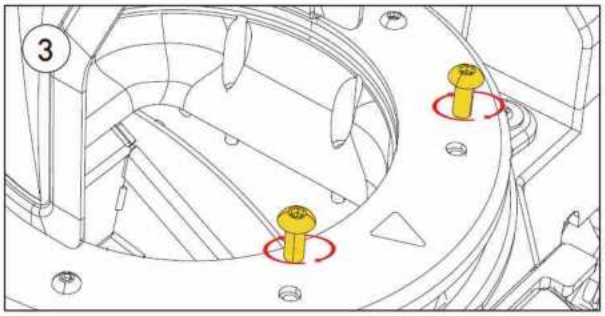

Tighten the two **Snow Plume Diverter connection bolts** just removed.

5.4 Removing Snow Blower Protection Fence

Snow Blower Protection Fence serves as a vital defense mechanism, primarily dedicated to ensuring pedestrian safety by acting as a protective barrier for critical machine components, including impellers or augers. The protection fence of a snow removal robot like Yarbo can be uninstalled under special circumstances, such as when dealing with heavy snowfall where reduced resistance is necessary to ensure smooth operation.

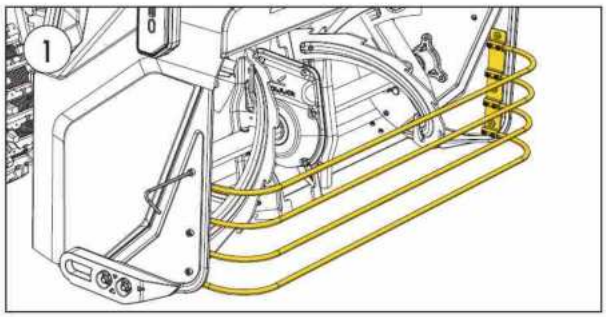

Unscrew the bolts in both sides of the protection fence using Allen Key #2 provided in the package.

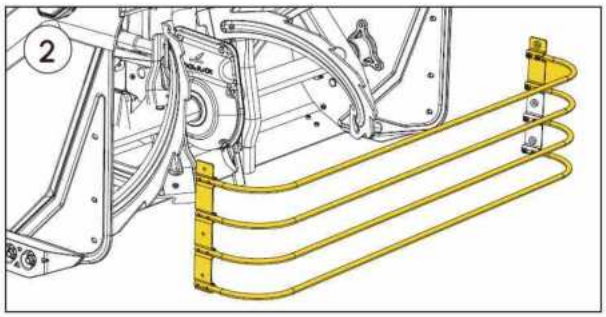

Remove the protection fence and safely preserve the bolts and fence.

5.5 Track Replacement

We provided different types of track for different usages. For lawn purposes, please locate the Quick-detach track located in the package.

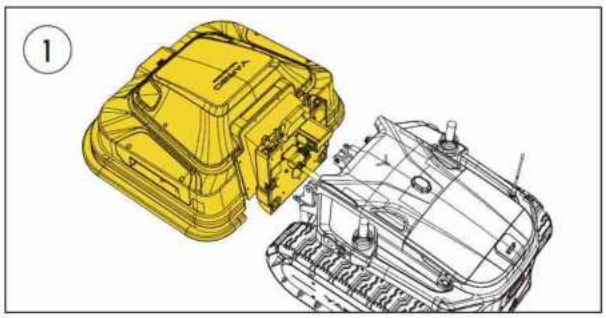

Please remove the module in the front for better adjusting the track.

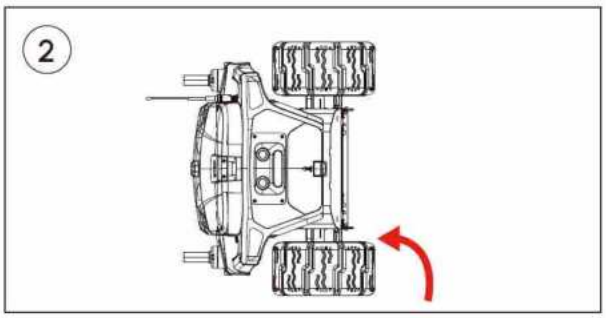

Rotate the Yarbo Core to a vertical position on its side.

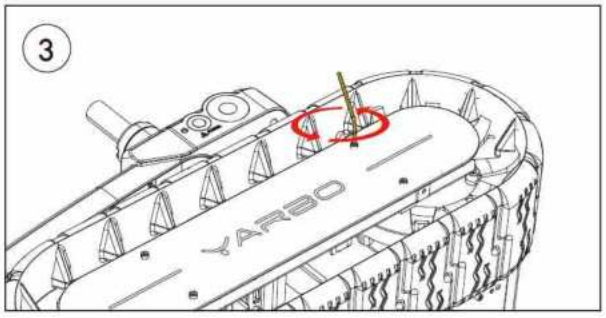

Remove the Side Panel by unscrewing the four bolts shown in the picture using Allen Key#2.

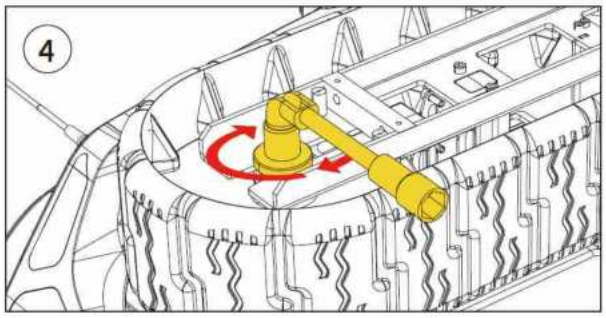

Locate L-Shaped Socket Wrench for Track provide in the package and use this tool to loosen the bolt shown in the pucture.

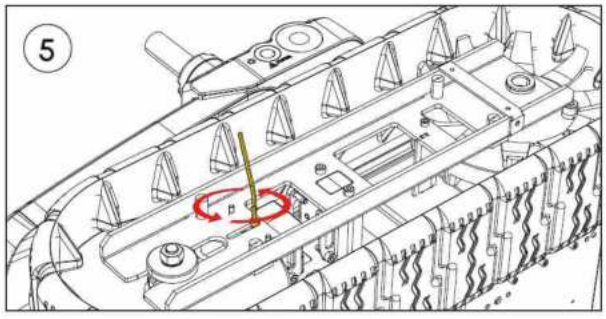

Unscrew the bolt shown in the picture using Allen Key#4

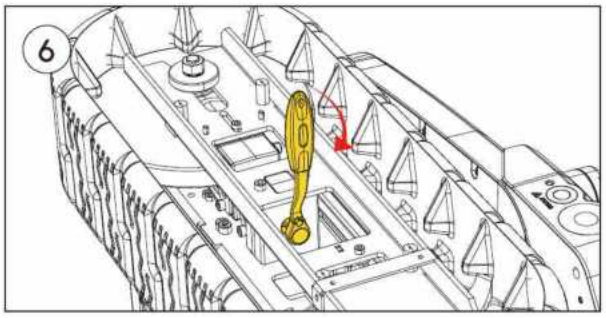

Locate the Track Wrench in the package and loosen the bolt shown in the picture.

5.Optional Operation

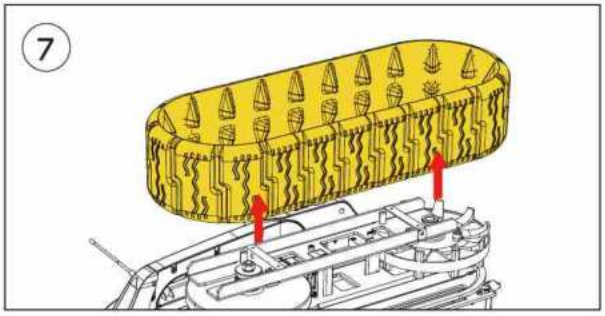

Tap both ends of the track and carefully detach the track from the Yarbo Core. If it is still too hard to detach the track, please repeat step 4 and step 5.

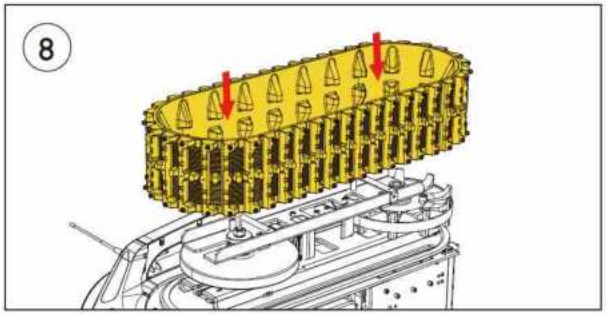

Locate the Snow Track provided in the package and install the Snow Track. Please ensure the track direction is correct as shown in the picture.

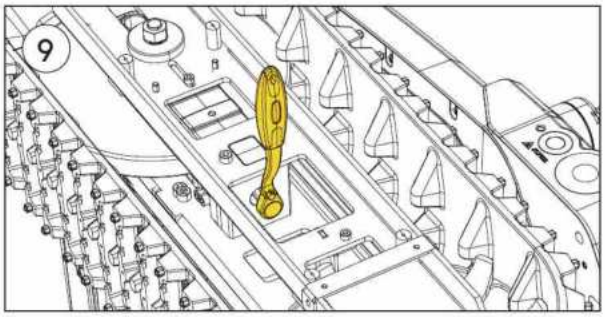

Locate the Track Wrench and tighten the bolt.

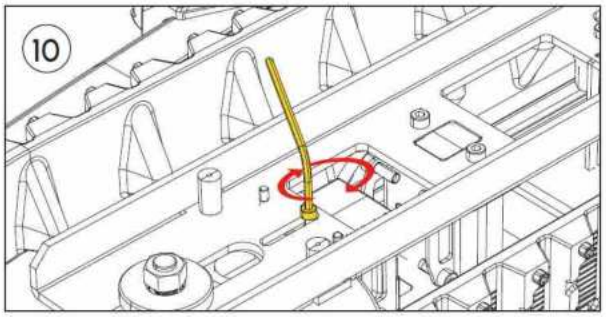

Tighten the bolt using Allen Key#4

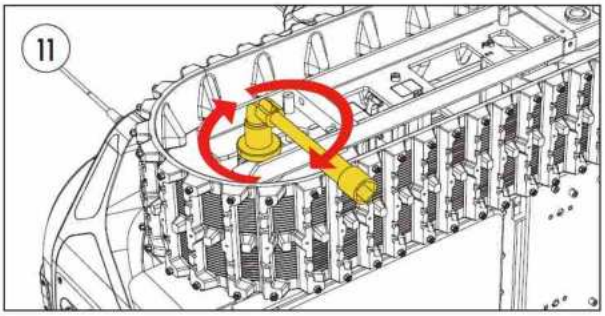

Locate L-Shaped Socket Wrench for Track and use the tool to tighten the track.

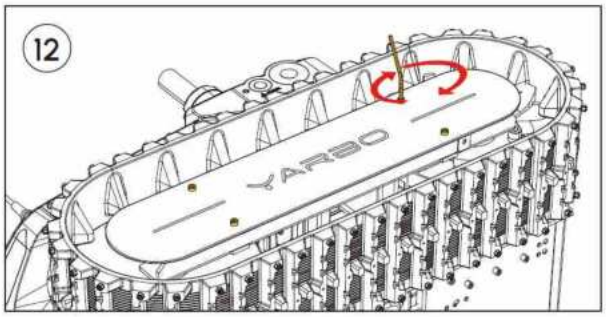

Place back the Side Panel and screw the four bolts to tighten the panel using Allen Key#2.

6.Charging

6.1 Charging Yarbo With Wired Charger

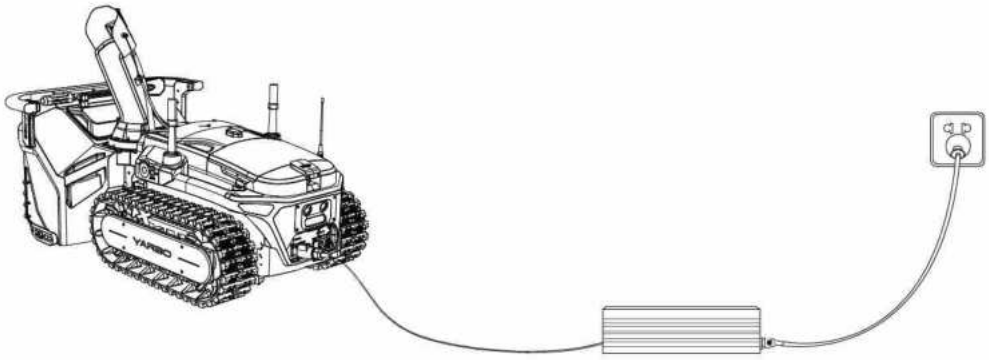

- To begin charging Yarbo, plug the wired charger into an electrical outlet, and then connect it to the charging port located at the rear of Yarbo.

⚠ WARNING

- Inspect the charging cable for any signs of damage or fraying. A damaged cable should be replaced to ensure safe and efficient charging. Also, please ensure that the connectors are clean and free from debris or dirt, as this can affect the charging process.
- When connecting the charger to Yarbo, please ensure a secure and snug connection. A loose connection may result in slow or interrupted charging. Double-check that the charger is firmly plugged into both Yarbo and the power source.
- Please ensure that the wired charger you are using is compatible with Yarbo. Check the charger's specifications and ensure it provides the appropriate voltage and current for charging Yarbo. Wrong voltage setting will damage the wired charger and Yarbo's battery pack, may lead to fire and explosion.

6.2 Charging Yarbo with Docking Station

Autonomous Recharge

- Before using autonomous recharge, you need to:

  ① Make sure you have already set up a map for Yarbo.
  ② Yarbo is located within your area.
  ③ Make sure the RTK Signal is strong.

- Normally, Yarbo will automatically return to charge when it detects low battery level (<20%). You can also manually send Yarbo to the docking station to recharge by:

  Tapping the "Recharge"button on the Yarbo app's virtual controller page
  Or
  Tapping the "Recharge"button on the Yarbo app's automonous plan page.

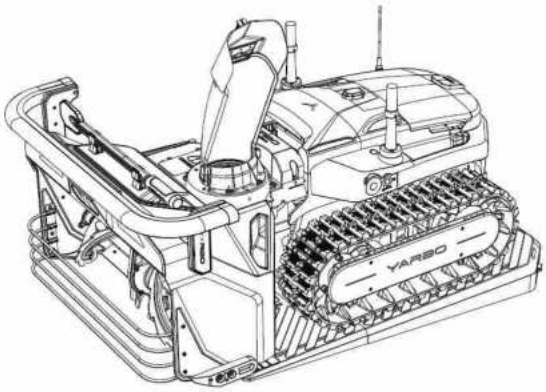

① Once the Yarbo is placed at the **center of the docking station**, automatic charging will commence without user intervention for 5 minutes.
② Click the **Charge** button on the APP home page if you want Yarbo initiate the charging process right now.

Manual Recharge

- Use the physical/virtual controller, manually drive Yarbo onto the docking station. Ensure that the Yarbo is positioned directly at the center of the docking station and parked in the correct orientation.

Maintenance Video

7.Maintenance Guide

7.1 Before Conducting Any Maintenance

⚠ WARNING

- Please ensure that you do not wear open-toed shoes or go barefoot when performing the following maintenance tasks.
- Always use appropriate Personal Protective Equipment (PPE). Wear protective gloves and goggles whenever performing maintenance tasks or when needed.
- Ensure that Yarbo is switched OFF and disconnects the battery when performing the following maintenance tasks.

Disconnecting Battery from Yarbo

① **Press** the Emergency Stop Button.
② **Press** the Power Switch to turn off Yarbo.
③ **Confirm** that Yarbo is turned off by checking if all the lights are switched off. Unscrew the bolts on the side of the battery cover**.**
④ **Remove** the battery cover and unplug the cable connecting Yarbo and battery pack. Remove the battery pack and safely secure it.

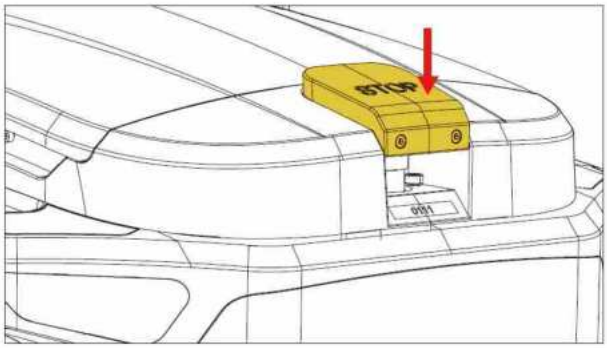

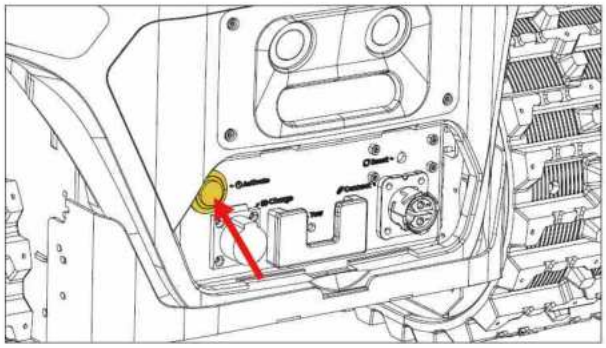

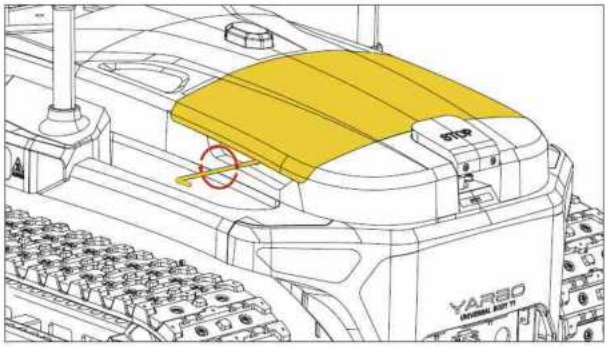

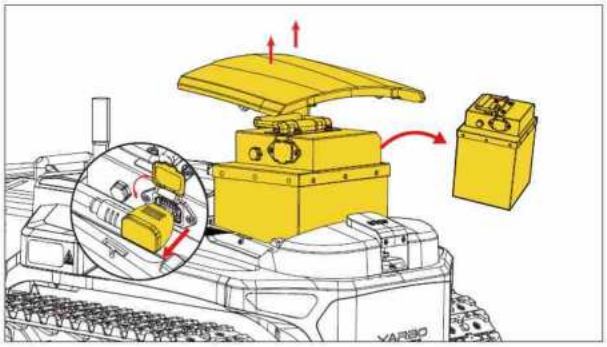

7.2 Cleaning Yarbo Core

Please avoid using solvents or large amount of liquid on plastic components, as commercial solvents can potentially harm the appearance and integrity of your Yarbo. Instead, use a clean and gentle cloth or a brush to remove debris, mud, and other particles. Please avoid using the high-pressure water hose or any high pressure cleaning methods to clean the Yarbo Core.

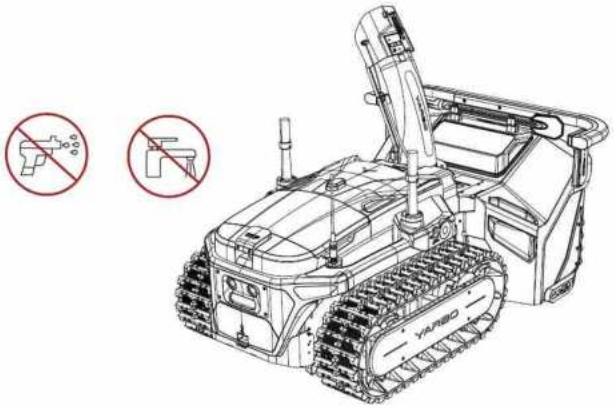

⚠ WARNING

- This statement advises that if the cameras used for obstacle avoidance is covered, dirty, or unclear, it may lead to confusion about the visual algorithms that rely on these cameras. It suggests cleaning the cameras with a soft cloth to ensure they are clear and functioning properly.
- Ensure that the power socket does not come into contact with anything wet.

7.3 Installing Tow Hitch

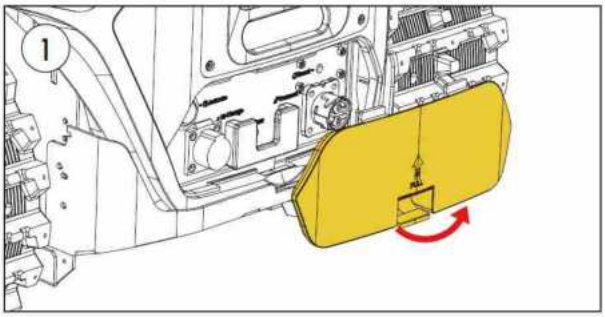

Remove the rear cover.

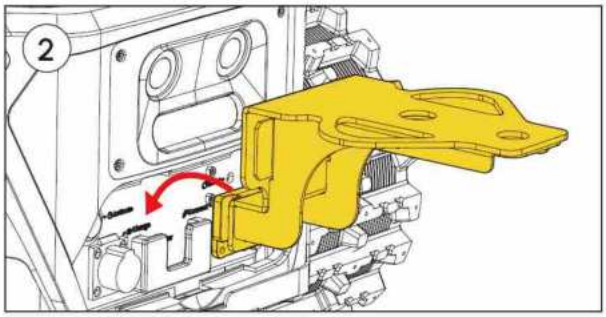

Locate the tow hitch provided in the package. Align the connection part of the tow hitch to the mount .

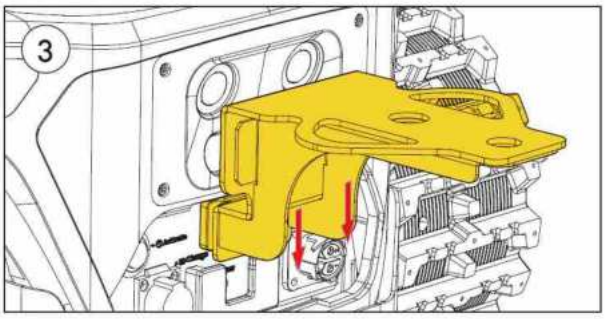

Slide the tow hitch down to the bottom of the mount.

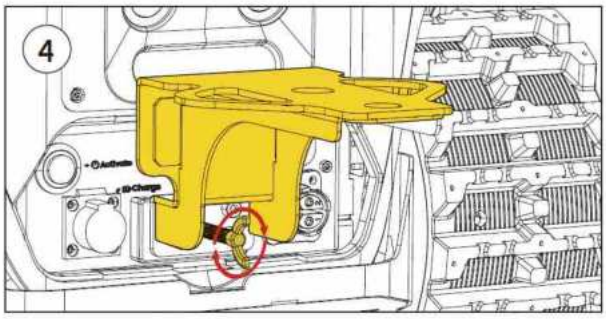

Locate the tow hitch bolt provided in the package and tighten the tow hitch by screwing the bolt. Ensure that the bolt is securely fastened to prevent any loosening while towing.

7.4 Applying Grease on the Tracks

It is crucial to apply grease regularly on the tracks to maintain smooth rotation of the drive wheel and road wheels. This is especially important during the machine's first year of use. Over time, grease may degrade and diminish, making regular refills essential. We advise applying grease every two weeks throughout the snow season. While various grease types are suitable, we recommend opting for high-vacuum grease for optimal performance. Below are the situations when immediate application of grease is needed.

- **Motion Hampered**: When you sense that your Yarbo has not been greased for a while and its motion might be hampered due to this.
- **Noisy Operation**: Unusual noise coming from the tracks indicates possible friction or wear. Applying grease can help reduce this noise by lubricating the moving parts and reducing friction.
- **Track Disengagement**: If you notice the track becoming detached from the main body during inspection, it could be due to inadequate lubrication. Greasing the tracks can help maintain a secure connection between the tracks and the main body of the machine.

⚠ NOTICE

- The presence of debris or mud on the rubber tracks can negatively impact Yarbo's driving performance. To maintain optimal performance, make sure to clean debris and mud from the rubber tracks on a regular basis.

7.5 Updating Firmware

Ensuring optimal performance of Yarbo at the hardware level is crucial, but it's equally vital to maintain the firmware up-to-date. Regular firmware updates notification will be made available through the Yarbo App. We highly recommend utilizing the built-in Over-The-Air (OTA) technology within the Yarbo App to update the firmware as soon as new versions are released. These updates consistently enhance the capabilities of the product.

Before proceeding to update firmware, please ensure that the following conditions are met:

① The battery level is at least 30%.
② Yarbo is connected to the internet.
③ No working schedules are active within the next hour to prevent interruptions during the update process.

7.6 Installing Anti-slip Studs

Intalling Anti-slip Studs

① Find the anti-slip studs provided in the content box.
② Screw the anti-slip studs on the two tracks using Socket #1.

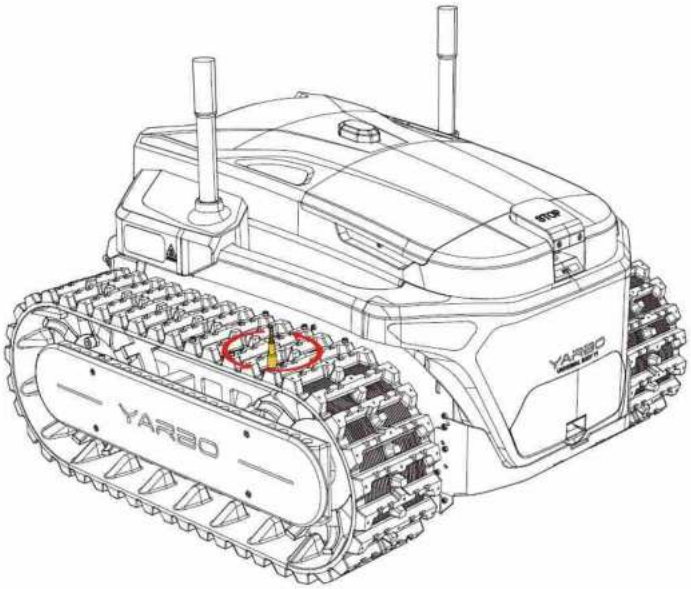

7.7 Keeping Battery at its Best Performance

Extended periods of inactivity can significantly diminish the performance of the battery pack. To minimize this degradation, it's important not to leave the battery pack inactive for more than three months. Lithium-ion battery packs experience slight self-discharge over time. Charging the battery pack for at least 15 minutes once every three months will suffice to maintain its activity level.

⚠ NOTICE

- The battery pack lifespan is influenced by operation frequency and total working hours. If the operating time per full charge noticeably decreases, it might be the time to consider replacing the battery pack.

8.Specification

8.1 Yarbo Core

Item	Value
Dimensions, length*width*height	27*22*20in/675*566*512mm
Weight, without battery pack	123.5lbs/56kg
Weight, with battery pack	145.5lbs/66kg
Operational Temperature	-13°F to 113°F/-25°C to 45°C
Towing Ability	GTW up to 3500lbs/1600kg
Module Pitching Angle	0° to 18°
Internet Access Technology	WIFI, WiFi-halow, 4G
Navigation Technology	RTK-GPS
Charging Technology	Wired, Wireless
Obstacle Avoidance Technology	Computer Vision by cameras

8.2 Yarbo Snow Blower Module

Item	Value
Dimensions (with Discharge Chute), length*width*height	29*22*29in/729*569*742mm
Dimensions (with Discharge Chute and Universal Body Y1), length*width*height	42*28*29in/1067*729*742mm
Weight	83 lbs/37.5kg
Operational Temperature	-13°F to 113°F/-25°C to 45°C
Cleaning Width	24 in/60cm
Intake Height	12in / 30cm
Throwing Distance	6ft to 40ft / 2m to 12m
Chute Rotation Angle	-10° to 190°
Deflector Angle	-5° to 50°
Operational Snow Types	Fluffy snow, dry snow, wet snow, packed snow, heavy snow.
Applicable Surface	Pavement, Brick, Stone, Concrete, Tarmac and Asphalt
Maximum Climbing Ability, percentage of slope	36%
Obstacle Avoidance Technology	Collision sensors in Bumper, Computer Vision by cameras