YARBO

USER MANUAL

YARBO Y LAWN MOWER PRO

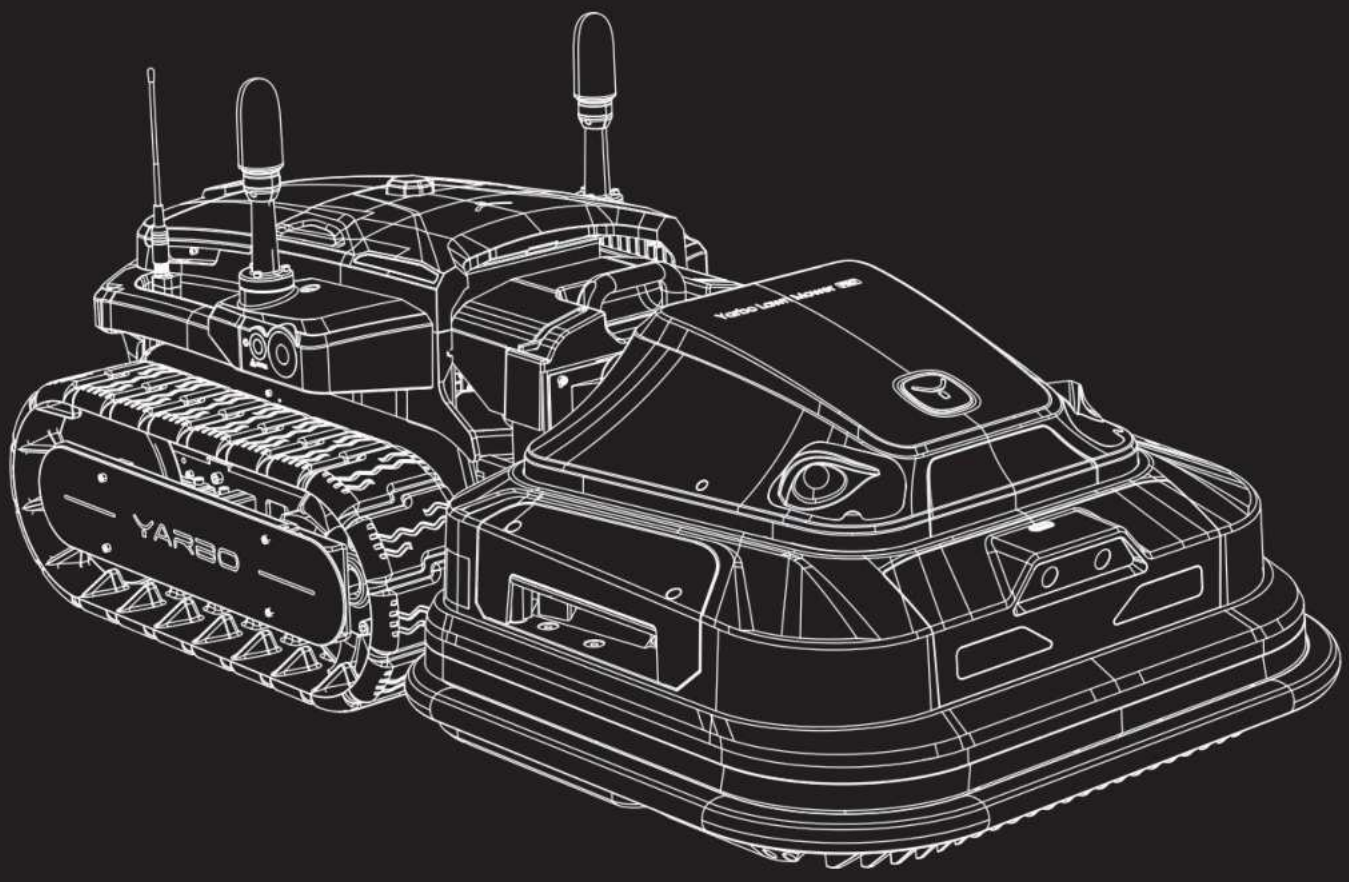

User Manual

Video Assembly Guic

YARBO

Table of Contents

Welcome

Safety

1.1 Pre-operation Safety Instructions 01
1.2 Operation Safety Instructions 01
1.3 After-operation Safety Instructions 02

Box Content Introduction

2.1 Lawn Mower Pro Box Content 03
2.2 Product Overview 04

Installation Guide

3.1 Assembling Lawn Mower Pro 06
3.2 Installing Yarbo App 09

Yarbo APP Features

4.1 Features Statement 10

Maintenance Guide

5.1 Before Conducting Any Maintenance 13
5.2 Cleaning Yarbo Core 14
5.3 Replacing Cutting Blade 15
5.4 Applying Grease on the Tracks 18
5.5 Updating Firmware 19
5.6 Keeping Battery at Its Best Performance 19

Specification

6.1 Yarbo Lawn Mower Pro Module 20
6.2 Operating Bands Specifications (For EU Models) 21
6.3 FCC Compliance Information (For US Models) 22

Limited Warranty

7.1 Residential Warrant Coverage 23
7.2 General Statement 24
7.3 Warranty Forfeiture 25

Welcome



Thank you for purchasing Yarbo Lawn Mower Pro. We are more than happy to welcome you to our user community. We understand your anticipation for this long-awaited yard robot to free yourself and your family members from the annoying mowing routine. Before you start using our product, we kindly ask you to thoroughly read this user manual for proper usage.

1. Safety

⚠ MUST READ

Failure to follow safety instructions may result in serious injury or property damage. Yarbo disclaims any liability for consequences arising from improper use or failure to follow these instructions.

⚠ 1.1 Pre-operation Safety Instructions

■ Ensure the area is free of obstacles that may cause damage to the product.
■ Verify that the product is functioning correctly before use.
■ Do not use the product if any parts are broken or malfunctioning.
■ Do not allow children or pets to access the mobile app.
■ Ensure the product is assembled and operated according to the user manual. The operator must read and fully understand the manual before use.
■ Clean the cameras before use, if needed. Use only non-corrosive cleaners and soft materials. Take extra care, as the cameras may become hot and cause burns due to the heating film.

⚠ 1.2 Operation Safety Instructions

■ Always maintain a safe distance when using the mobile app or during automatic operation. Never place any part of your body near or under the Yarbo system, especially when it is turning or climbing slopes.
■ Do not allow children, individuals with physical, sensory, or mental limitations, or those lacking experience or knowledge to operate Yarbo. Please note that local regulations may impose age restrictions on the operator.
■ A trained and authorized individual must supervise untrained persons whenever Yarbo is in operation.
■ Do not operate Yarbo if the operator is under the influence of alcohol, drugs, or illness.
■ Do not throw objects toward the product or surrounding vehicles and buildings, as this may damage the auger or impeller of the active module.
■ If Yarbo is operating in public spaces, clearly display warning signs around the work area. Examples include:
"Warning! Automatic Snow Blower! Keep away from the machine! Supervise children!"
"Warning! Automatic Lawn Mower! Keep away from the machine! Supervise children!"
"Warning! Automatic Blower! Keep away from the machine! Supervise children!"
■ Do not operate Yarbo near fires, hot ashes, or heat sources to prevent fire hazards.

■ Ensure Yarbo is powered off before clearing blockages, performing maintenance, or conducting inspections. If abnormal vibrations occur, stop operation immediately, press the emergency stop button, and inspect the device for damage. If the vibration continues, remove the battery and check for potential faults.
■ Never step or sit on Yarbo at any time.
■ Only use the provided docking station to charge Yarbo. To avoid electric shock, overheating, or battery leakage, do not touch any part of the charging station during charging.
■ Caution: Slippery Surfaces — Areas where snow has been cleared may remain slippery. Pedestrians and vehicles should proceed with caution to avoid accidents.
■ Adapt to Extreme Weather — In extreme conditions (e.g., heavy snowfall or icy surfaces), Yarbo's performance may be affected. Adjust your operation strategy accordingly for optimal and safe use.

⚠ 1.3 After-operation Safety Instructions

■ Always wear gloves and follow the recommended maintenance procedures. Shut down Yarbo and remove the battery before performing any maintenance, inspections, or clearing blockages in the discharge chute.
■ Disconnect the battery from the core if Yarbo will not be used for an extended period.
■ Regular Maintenance: Regularly inspect the blades, battery, motor, and other parts to ensure proper function and minimize the risk of malfunction.

⚠ Disclaimer

This safety guide is provided for general informational purposes. The operator is solely responsible for ensuring compliance with local laws, regulations, and safety standards. Yarbo disclaims all liability for injuries, damages, or losses arising from improper use, failure to follow these instructions, or failure to comply with applicable local laws and regulations.

2. Box Content Introduction

2.1 Lawn Mower Pro Box Content

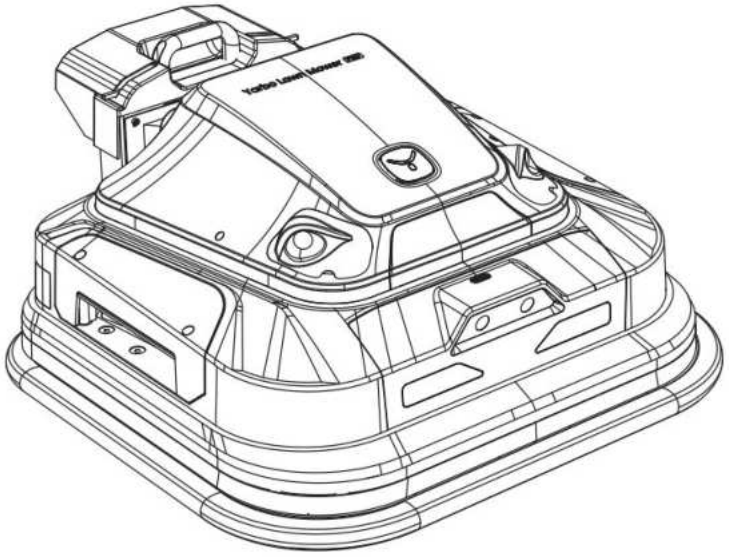

Lawn Mower Pro Module



Lawn Mower Pro User Manual



Module Vertical Stand

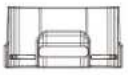

Rubber Connection Cover



Phillips-Head Screwdriver



x20
Spare Cutting Blades



x8
Cutting Discs Spare Bolts



x20
Cutting Blade Spare Bolts



x2
Spare Straight Blades



x6
Straight Blade Spare Bolts



x2
Screw Protection Cover
(for straight blades)

2. Box Content Introduction

2.2 Product Overview

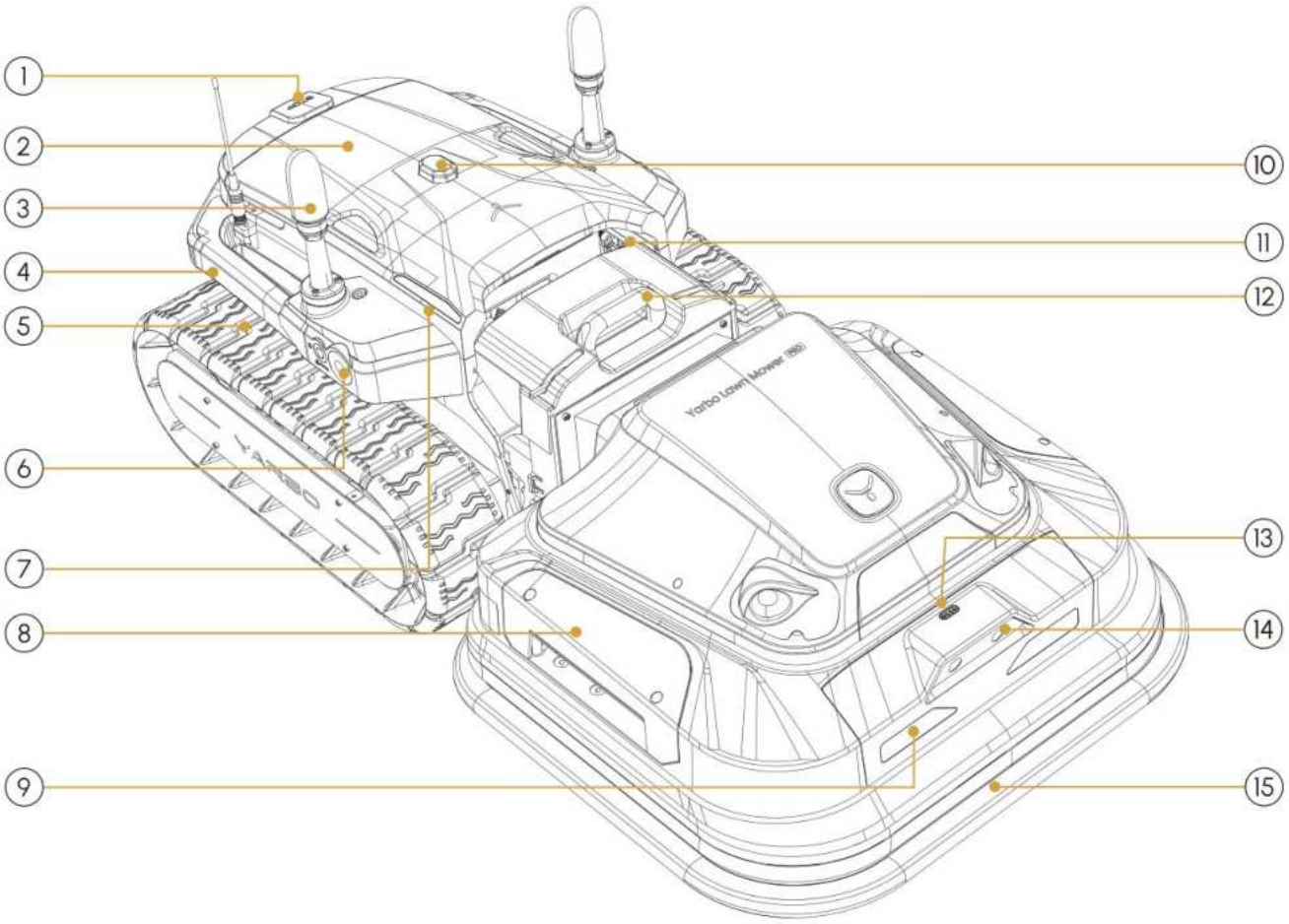

1. Emergency Stop Button
2. Battery Cabin
3. RTK Antenna Pro
4. Lifting Handle
5. Lawn Track
6. Side Camera
7. Battery Indicator Light
8. Lifting handle
9. Front light
10. Warning Light
11. Rubber Cover for Module Connection
12. Lifting Handle
13. Rain Sensor
14. Front binocular camera
15. bumper

2. Box Content Introduction

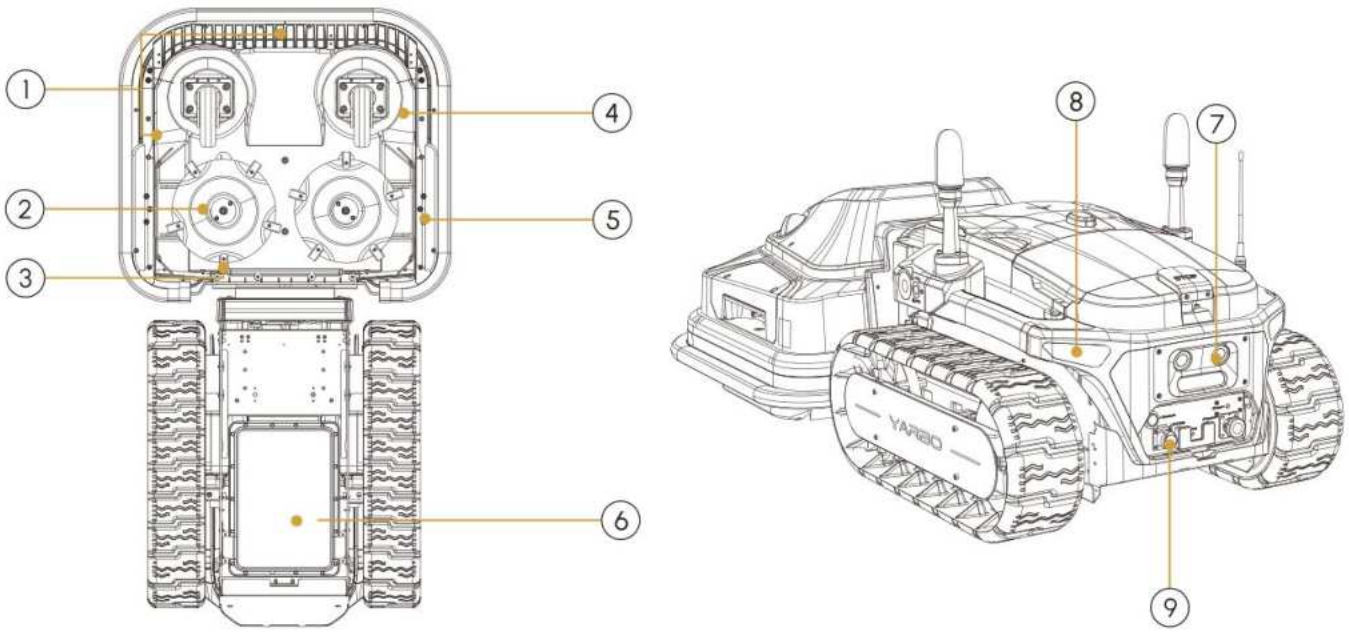

① Skid Skirt ② Cutting disc ③ Cutting blade ④ Caster wheel ⑤ Blade Guard

⑥ Wireless Charging Receiver ⑦ Rear Binocular Camera ⑧ Rear Light ⑨ Activate Button

3. Installation Guide

3.1 Assembling Lawn Mower Pro

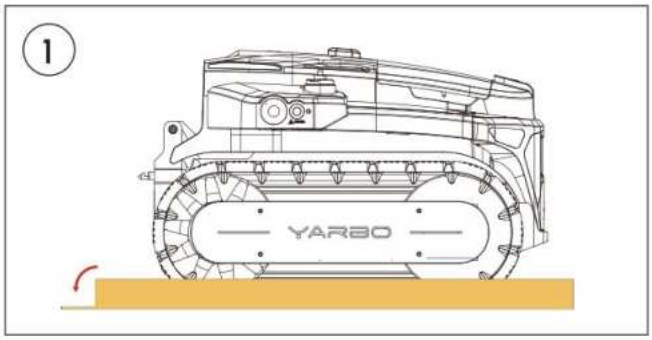

Cut the box along the cutting line on the bottom of the packaging box.

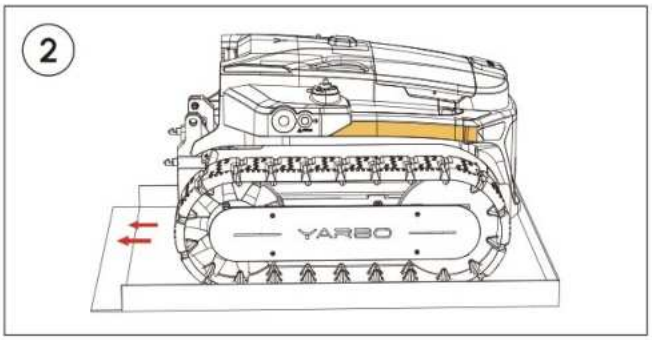

Grasp the lifting handles of the Yarbo Core and **push** the Yarbo Core out from the packaging box.

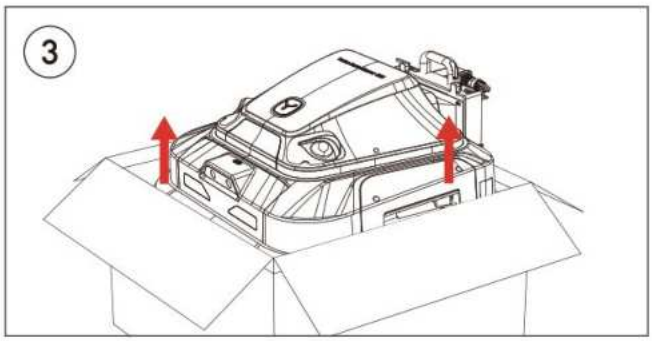

Carefully **lift** the Lawn Mower Pro Module out of the packaging box by grasping the lifting handle.

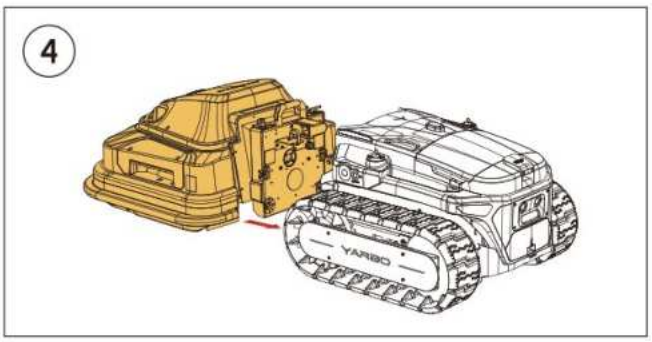

Pull the Lawn Mower Pro Module close to the Yarbo Core by **grasping** the lifting holder on both sides, ensuring that the two parts are prepared closely enough to connect the cable.

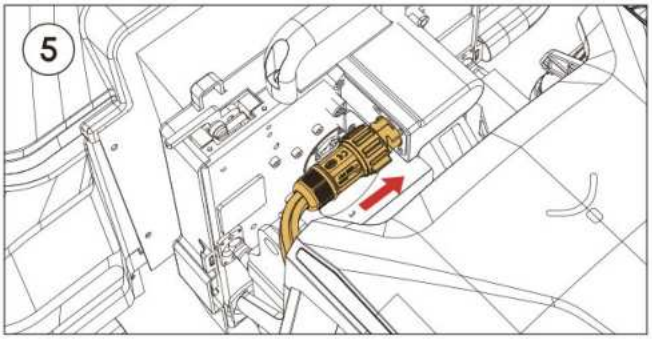

Carefully **insert** the cable into the port on the Lawn Mower Pro Module, ensuring that both are properly aligned and securely connected.

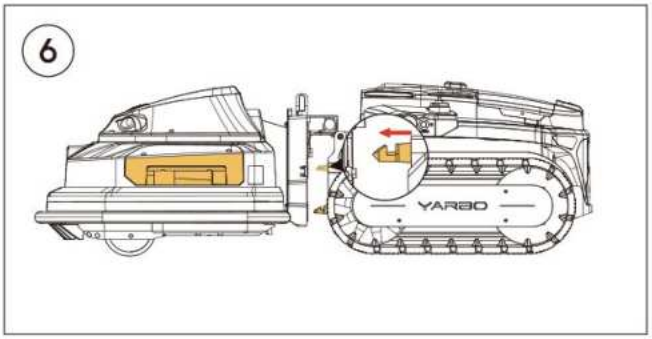

Lift the Lawn Mower Pro Module by **grasping** the holder and **locate** the shafts and holes in the Yarbo Core and Lawn Mower Pro Module. Slightly **push** the Lawn Mower Pro Module towards the Yarbo Core after the proper alignment.

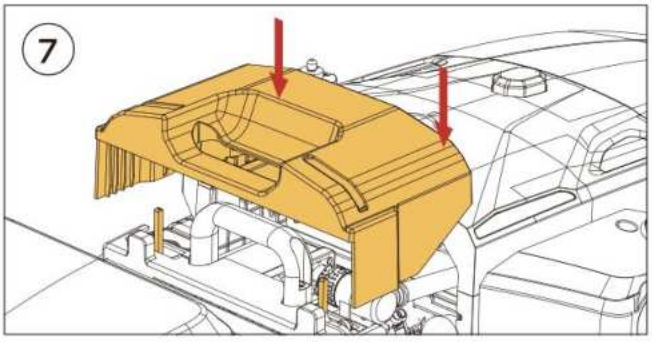

Lift the two locks on the sides. **Locate** the the Plastic Connector Cover provided and **install** it onto the connection part of Lawn Mower Pro.

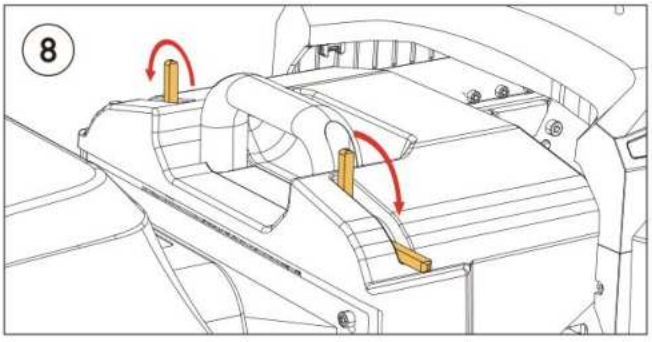

Push down the two locks on both sides.

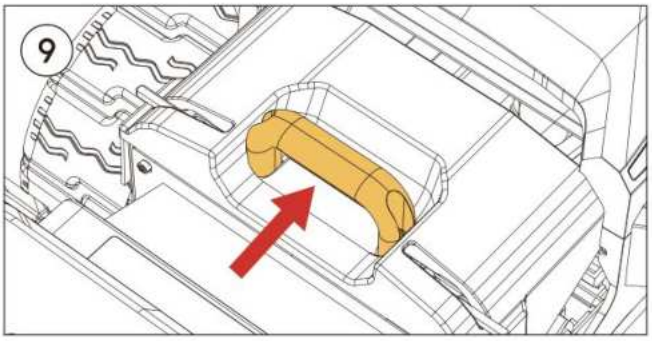

Push the connector in until it clicks. Make sure both locks are down and secure.

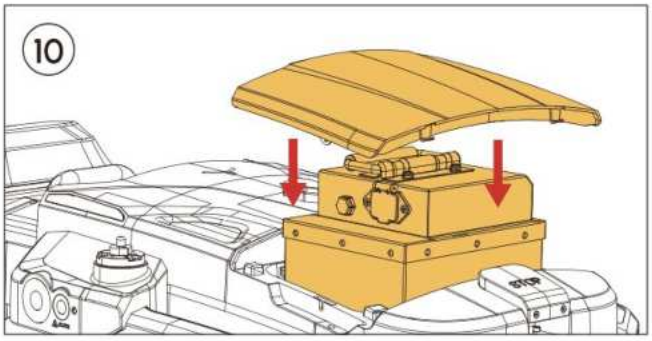

Lift the battery cover and **place** the battery into the battery cabin.

3. Installation Guide

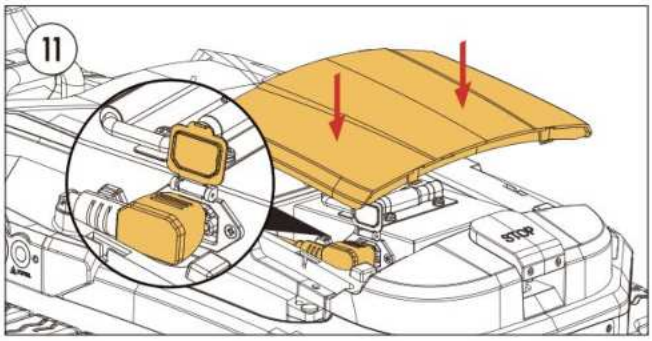

Remove the cover by grasping both sides with your hands and lifting. Place the battery inside the chamber and **connect** the cable from the Yarbo Core to the battery.

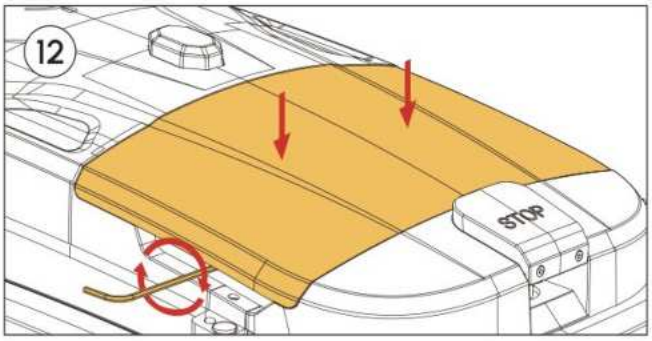

Replace the cover and **screw** the Anti-theft Bolts on both sides using Battery Cover Wrench provided in the package.

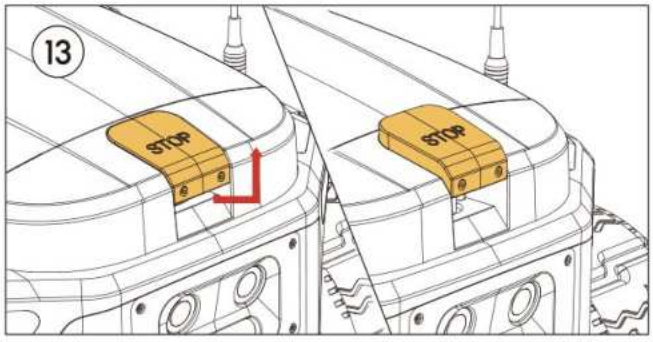

Lift the Emergency Stop Button.

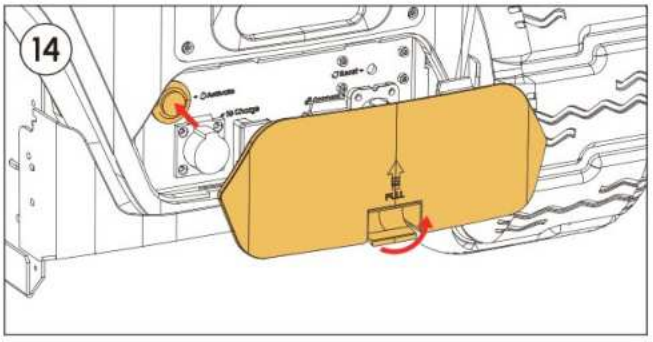

Remove the rear cover. **Press** the Activate button to turn on Yarbo. **Reinstall** the rear cover.

3.2 Installing Yarbo App

The Yarbo App is a professional application that empowers you to manage and control your Yarbo anytime, anywhere, elevating your lawn mowing experience to new heights. With its impressive features, you can easily set up work schedules, define multiple working areas and no-go zones, and monitor Yarbo's operating status. Additionally, you can receive the latest firmware updates and access instruction manuals, video tutorials, FAQs, and more through the App.

Follow these simple steps to install and set up the Yarbo App:

① Download the Yarbo App by scanning the QR code below or searching on the app store.
② After installation, log in to your Yarbo account. If you don't have one, please register.
③ Follow the steps of the first-time user guide on the app. If there are few steps that are hard to understand, please refer to the app section of this user manual.

*Note: Once a device is associated with a Yarbo account, it cannot be linked to a new account. However, you can invite others to use your Yarbo through Yarbo Sharing in the app.

iOS

Available on the App Store

Android

GET IT ON Google Play

APP Tutorial

4. Yarbo APP Features

Before using the Yarbo App, we recommend taking a few moments to read through this user manual. The app plays a key role in operating your Yarbo device, so understanding its features and how it works is essential for a smooth experience. If you haven't downloaded the app yet, please refer to Section 3.2.

4.1 Features Statement

1.Mapping

The mapping function is tailored for users to create a detailed map of the area where Yarbo to operate. Normally, A map encompass the docking station, pathways, woking areas, no-go zones. With the map, Yarbo can design its route through intelligent algorithm and execute the work plan depending on the personal schedule. The provided picture serves as an example of the map, showing two designated working areas, one No-go Zone, two Pathways and a docking station.

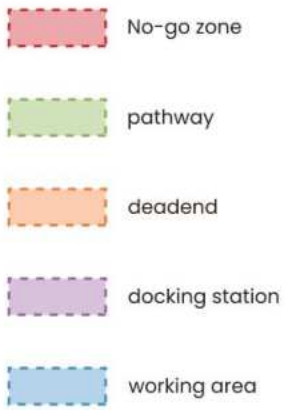

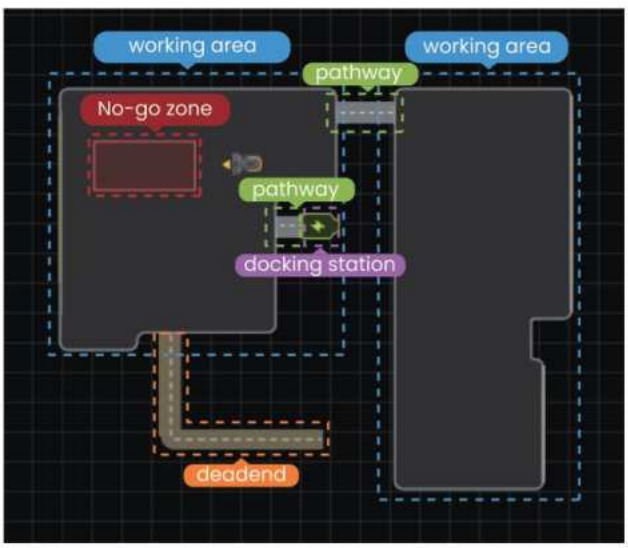

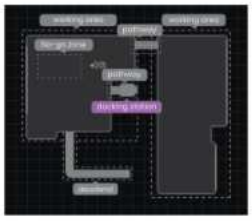

① Docking Station serves two purposes:

1. Charging Station – Marked by a green battery icon on the map.
2. Work Plan Starting Point – The designated location where Yarbo begins its tasks. If you need to move the docking station, update its position on the map by clicking "Reinstall Docking Station" on the Yarbo Settings page.

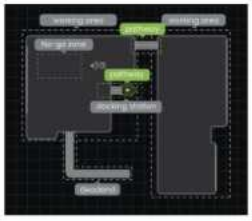

② Pathway:

A pathway is designed to be a narrow lane that connects the two elements. A pathway can connect the docking station and the working area. At the same time, it can also connect two working areas shown in the map.

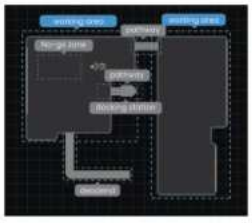

③ Working Area:

The working area refers to an enclosed zone where Yarbo performs operations. While the entire map requires at least one working area connected to the docking station, additional working areas may be added and connected via pathways. To define a working area, simply drive Yarbo along the desired perimeter - the system will automatically recognize the boundary and handle all navigation routing. Each working area must maintain a fully enclosed boundary for proper operation.

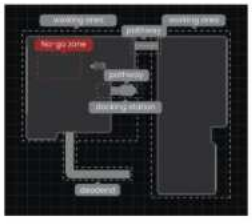

④ No-go Zone:

The "No-go zone" refers to enclosed areas within the working area where you do not want Yarbo to enter. Typically, these areas include the swimming pool, flower beds, restricted areas, and large obstacles that may obstruct Yarbo's normal operation. Although Yarbo can detect and avoid obstacles, drawing the no-go zone in advance can save time during operating.

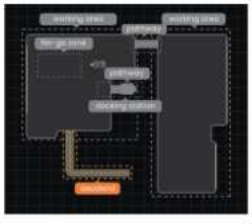

⑤ Deadend:

A deadend is a narrow path that matches the width of the Yarbo. One end must connect to a working area or pathway, while the other end can remain unconnected. When processing a deadend, the Yarbo moves straight in and straight out.

2.Work Plan

The Work Plan feature is designed to help users create tasks. Each work plan can be customized by choosing one or more elements on the map. In other words, users can create different work plans that include different elements on the same map. The purpose of creating different work plans is to ensure that different elements can have different working schedules.

3.Schedule

The Schedule feature empowers users to establish precise working time slots and work frequencies for the created work plan. Each schedule can only be linked with one work plan at a time, ensuring clarity and efficiency in task management. By utilizing schedules, users can enjoy 100% activities in alignment with their specific requirements.



Maintenance Video

5. Maintenace Guide

5.1 Before Conducting Any Maintenance

⚠ WARNING

- Please ensure that you do not wear open-toed shoes or go barefoot when performing the following maintenance tasks.
- Always use appropriate Personal Protective Equipment (PPE). Wear protective gloves and goggles whenever performing maintenance tasks or when needed.
- Ensure that Yarbo is switched OFF and disconnects the battery when performing the following maintenance tasks.

Disconnecting Battery from Yarbo

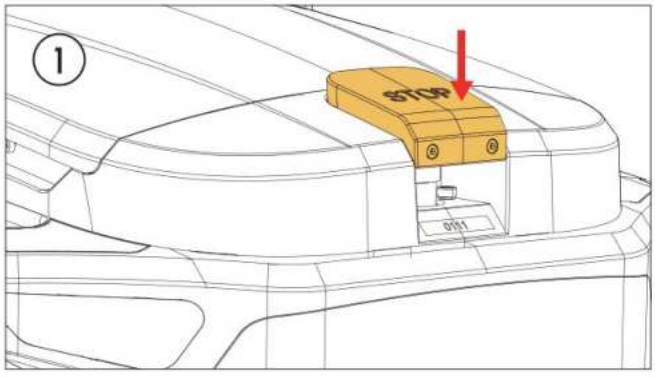

Press the Emergency Stop button first, and then shut down the Yarbo Core from the app.

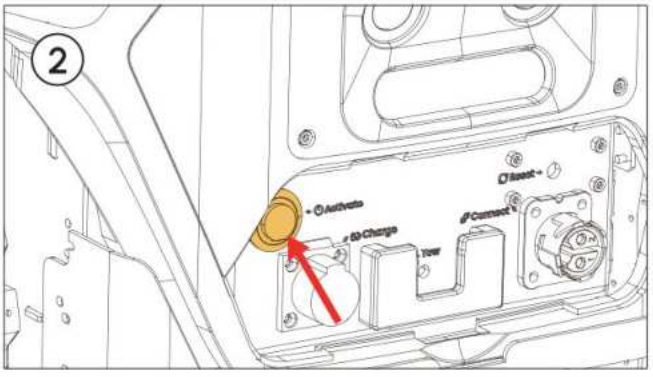

Confirm that Yarbo is turned off by checking if all the lights are switched off. For detailed instructions on how to turn off the machine, please refer to the **Yarbo App.**

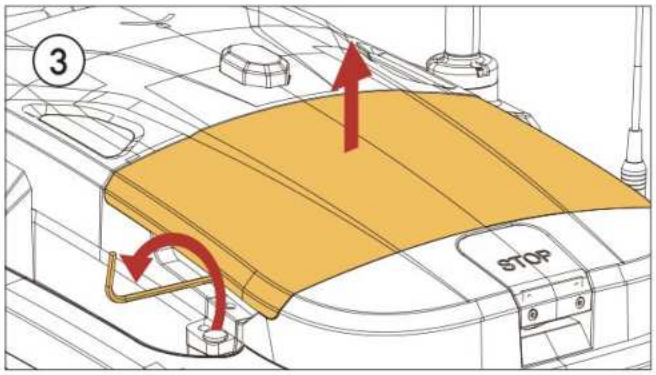

Use the Battery Cover Wrench to unscrew and remove the anti-theft screws from the existing battery cover.

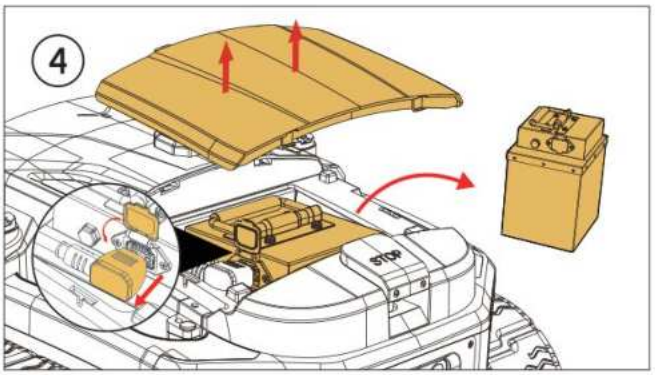

Remove the battery cover and unplug the cable connecting Yarbo and battery pack. **Remove** the battery pack and safely secure it.

5.2 Cleaning Yarbo Core

Please avoid using solvents or large amount of liquid on plastic components, as commercial solvents can potentially harm the appearance and integrity of your Yarbo. Instead, use a clean and gentle cloth or a brush to remove debris, mud, and other particles. Please avoid using the high-pressure water hose or any high pressure cleaning methods to clean the yarbo core.

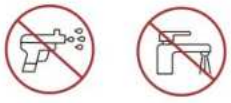

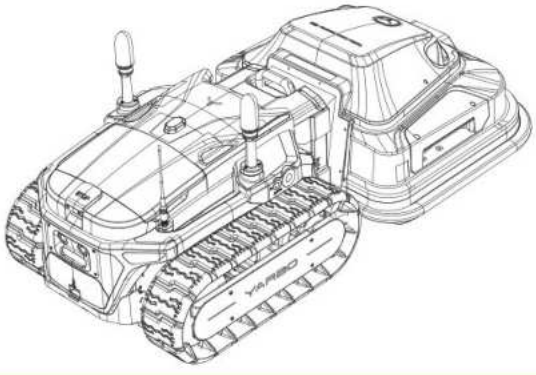

⚠ WARNING

- If the cameras used for obstacle avoidance are covered, dirty, or unclear, the visual algorithm may not function correctly. Clean the cameras regularly using a soft, dry cloth to ensure proper visibility.
- Keep the power socket away from any liquids or moisture. Do not allow the power socket to come into contact with anything wet.
- Always install the protective covers on both the power socket and module connector when not in use. This helps prevent damage from dust, water, or accidental contact.

5.3 Replacing Cutting Blade

Before Replacing the Cutting Blades on Lawn Mower Pro, please make sure you have power off the machine and ensure it is completely shut down.

5.3.1 Circular Cutting Blade

1. Detach the lawn mower Pro module from Yarbo Core.

2. Raise the lawn mower module from the side and carefully place it on the **Module Vertical Stand**. Please refer to the picture shown below.

3. Unscrew the Cutting Blades Bolts using Phillips-Head Screwdriver provided in the lawn mower Pro module box Box content.

4. Install the circular cutting blades by tightening the cutting blade bolts.



Module Vertical Stand

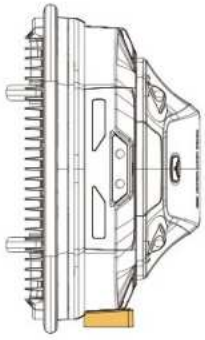

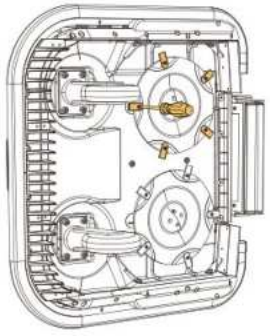

5.3.2 Straight Cutting Blade

Before installing the straight cutting blade, make sure the old cutting blade has been removed.

Remove the Old Cutting Blade

1. Carefully lift the Lawn Mower Module from the side and place it securely on the **Module Vertical Stand**. Please refer to the picture shown below.

2. Use the **Phillips-head screwdriver** (included in the Lawn Mower Pro module box) to unscrew the **Cutting Blade Bolts.**

3.**Remove** the old cutting blade by detaching it from the module.

Install the Straight Cutting Blade

Each blade is labeled L (Left) or R (Right) for correct positioning. Ensure the side marked "This side facing grass" faces toward you during installation.

1. Align the **Screw Protection Cover** with the mounting holes on the straight blade (L or R).

2. Align the combined blade and cover with the blade mounting holes on the mower deck.

3. Insert and tighten the Straight Blade Bolts to secure the blade in place.

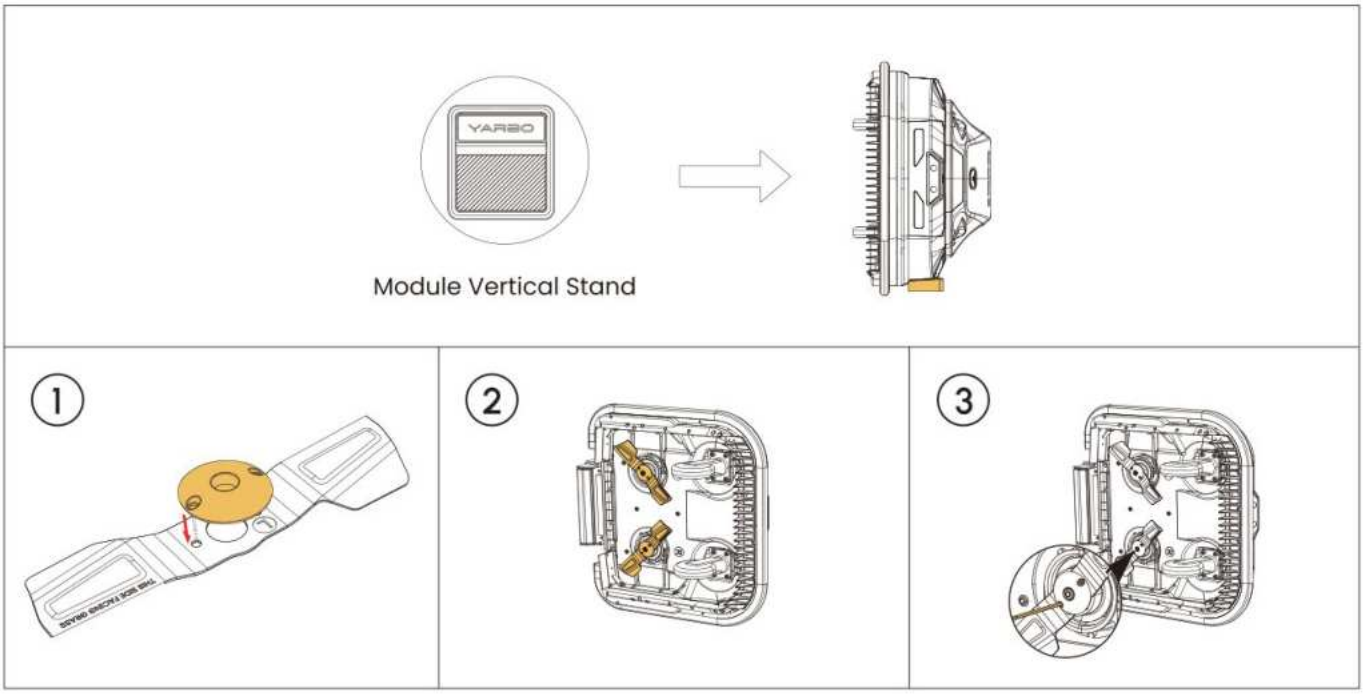

NOTICE

- It is recommended to replace all cutting blades simultaneously if the mowing results are not as satisfactory as before.
- The blades are advised to be replaced every three months. However, in the case of thick grass or more frequent use, blade replacements may be needed more often.

WARNING

- Stabilize the blade disc when fastening the cutting blade bolts.
- Ensure the safety of individuals by taking necessary precautions, such as wearing gloves, while performing this procedure.

5.4 Applying Grease on the Tracks

It is crucial to apply grease regularly on the tracks to maintain smooth rotation of the drive wheel and road wheels. This is especially important during the machine's first year of use. Over time, grease may degrade and diminish, making regular refills essential. We advise applying grease every two weeks throughout the snow season. While various grease types are suitable, we recommend opting for high-vacuum grease for optimal performance. Below are the situations when immediate application of grease is needed.

- **Motion Hampered**: When you sense that your Yarbo has not been greased for a while and its motion might be hampered due to this.
- **Noisy Operation**: Unusual noise coming from the tracks indicates possible friction or wear. Applying grease can help reduce this noise by lubricating the moving parts and reducing friction.
- **Track Disengagement**: If you notice the track becoming detached from the main body during inspection, it could be due to insufficient lubrication. Greasing the tracks can help maintain a secure connection between the tracks and the main body of the machine.

⚠ NOTICE

- The presence of debris or mud on the rubber tracks can negatively impact Yarbo's driving performance. To maintain optimal performance, make sure to clean debris and mud from the rubber tracks on a regular basis.

5.5 Updating Firmware

Ensuring optimal performance of Yarbo at the hardware level is crucial, but it's equally vital to maintain the firmware up-to-date. Regular firmware updates notification will be made available through the Yarbo App. We highly recommend utilizing the built-in Over-The-Air (OTA) technology within the Yarbo App to update the firmware as soon as new versions are released. These updates consistently enhance the capabilities of the product.

Before proceeding to update firmware, please ensure that the following conditions are met:

① The battery level is at least 30%.
② The Data Center is connected to the internet.
③ No working schedules are active within the next hour to prevent interruptions during the update process.

5.6 Keeping Battery at its Best Performance

Extended periods of inactivity can significantly diminish the performance of the battery pack. To minimize this degradation, it's important not to leave the battery pack inactive for more than three months. Lithium-ion battery packs experience slight self-discharge over time. Charging the battery pack for at least 15 minutes once every three months will suffice to maintain its activity level.

⚠ NOTICE

- The battery pack lifespan is influenced by operation frequency and total working hours. If the operating time per full charge noticeably decreases, it might be the time to consider replacing the battery pack.

6. Specification

6.1 Yarbo Lawn mower Pro Module

Item	Value
Dimensions, length*width*height	27*29*16in/691*745*406mm
Weight	32.2kg
Operational Temperature	-13°F to 113°F / -25°C to 45°C
Number of Mowing Discs	2
Number of Mowing Blades(Each Disc)	5
Noise level/db	60db
Threshold capability/cm	5cm
Maximum Climbing Capability, Slope Degree	35°
Mowing coverage / ㎡	25000 ㎡ (twice a week)
Cutting Width	20in / 50cm
Cutting Height	0.8-4 in / 20-100mm

6.2 Operating Bands Specifications (For EU Models)

Mower Pro Frequency Range:

Bluetooth(BR+EDR)&BLE	2402MHz~2480MHz
2.4G Wi-Fi	2412~2472MHz
5G Wi-Fi Band 1	5180MHz~5240MHz
5G Wi-Fi Band 4	5745MHz~5825 MHz
Halow	863.0-865.0MHz, 865.0-868.0MHz
GPS	1559~1610MHz
2.4G	2402MHz~2462MHz
FDD-LTE Band 1/3/7/8/20/28 & TDD-LTE Band 38/40	

6.3 FCC Compliance Information (For US Models)

Product Identification

Product Name	Yarbo Lawn Mower Pro
Model Number	MP2025

Responsible Party - U.S. Contact Information

Yarbo International Inc.
3100 Golf Rd, Unit B, Rolling Meadows, IL 60008, United States
Telephone: +1 (888) 550-6809
Internet: www.yarbo.com
Email: support@yarbo.com

Compliance Statement

This device complies with Part 15 of the FCC Rules. Operation is subject to the following two conditions:
(1) this device may not cause harmful interference, and (2) this device must accept any interference received, including interference that may cause undesired operation.
CAUTION: Changes or modifications not expressly approved by the party responsible for compliance could void the user's authority to operate the equipment.

Class B Digital Device Notice

This equipment has been evaluated for the limits applicable to a Class B digital device under Part 15 of the FCC Rules. Those limits are intended to provide reasonable protection against harmful interference in residential installations. The equipment can generate and use radio-frequency energy and may also radiate such energy. If it is not installed and used as instructed, it may cause harmful interference to radio communications. Compliance with the limits does not guarantee that interference will never occur in a particular installation. If this equipment causes harmful interference to radio or television reception, as determined by turning the equipment off and on, the user should try one or more of the following measures:

- Reorient or relocate the receiving antenna.
- Increase the separation between the equipment and receiver.
- Connect the equipment to an outlet on a circuit different from the one used by the receiver.
- Consult the dealer or an experienced radio/TV technician for assistance.

7. Limited Warranty

7.1 Residential Warranty Coverage

Lawn Mower Pro Module

Item	Parts	Warranty Period
Motor system	Cutting Height Adjusting Motor	2 Years
	Cutting Motor	
Vision System	Camera	2 Years
	Rain Sensor	
Consumables	Shell	1 Year
	Cutting Disc	No Warranty
	Cutting Blade	
	Caster Wheel	
	Straight Blade	

7.2 General Statement

1. Yarbo International Inc. shall not be liable for compensation if it can prove one of the following circumstances:

① The product has not been put into circulation;
② When the product is put into circulation, the defect causing damage does not yet exist;
③ When the product is put into circulation, the scientific and technological level cannot yet detect the existence of defects.

2. The warranty service is valid from the date of product delivery. When requesting after-sales service, our authorized service dealer may require the original invoice or receipt containing relevant information. In the absence of proof of purchase, the warranty period will commence based on the product's manufacturing date.

3. This warranty applies exclusively to original purchasers. Replacements do not initiate a new warranty; the original warranty remains valid from the initial delivery date. It's important to note that you may be responsible for covering the delivery costs associated with return, repair, or replacement of the product.

4. Yarbo will perform a diagnostic assessment on the returned product. If the defective product aligns with our limited warranty policy, Yarbo will cover the cost of repair or replacement. However, you may be responsible for the associated delivery charges.

5. Yarbo assumes no liability for any direct or indirect consequences arising from any cause, including but not limited to loss of use or loss of profits.

6. Please be mindful that any damage resulting from inappropriate packaging, other than the standard Yarbo packaging, is the sole responsibility of the customer. If you no longer have the original packaging, you must obtain suitable packaging or consult Yarbo's technicians for proper packaging guidance.

Repair and Warranty Services:

We have established a global after-sales service team, supported by local service partners, to ensure prompt and efficient service for all our users worldwide. Our comprehensive support includes a dedicated call center and local repair centers in key markets.

To request a repair service, please send your request to **support@yarbo.com** or contact us at **+1(888)-550-6809.**

If your product is still within the free warranty period and meets the criteria for a warranty repair, the service will be provided at no charge. If your product does not qualify for free warranty repair, standard repair fees may apply.

7.3 Warranty Forfeiture

The warranty may be forfeited under the following circumstances:

1. Failure to adhere to the operating or maintenance guidelines outlined in the User Manual.

2. Neglecting to perform the prescribed battery and product maintenance procedures.

3. Modification or repair conducted by an unauthorized service provider.

4. Damages resulting from forced operation with aged or deteriorated components.

5. Damages or product malfunctions arising from the misuse of unauthorized components or accessories.

6. Damages caused by non-defective factors, including but not limited to crashes or collisions. Additionally, damages caused by manually operating the product with a low-charged or defective battery, or tampering with the seals and labels on the product.

7. Components subject to normal wear and tear, such as the auger, rubber track, belt, or other parts subjected to typical usage, are not covered by warranty. For the purchase of these items, refer to our website at www.yarbo.com/pages/contact-us or connect with an authorized service dealer.

8. Warranty coverage does not extend to products used for commercial purposes. Commercial use includes instances where the product is employed in institutions, rented out, or utilized at multiple locations.

YARBOR INTERNATIONAL INC.

www.yarbo.com

For Privacy Policy, please visit:
https://www.yarbo.com/legal/privacy-policy
Please note, the User Manual may be updated based on the changes in production, product specification, included contents and so on.
For the latest version of the User Manual, please visit:
https://www.yarbo.com/support

Refer to Friends & Get Rewards

Share Your Yarbo Journey

Join Yarbo Exclusive Community

+1 (888)550-6809

support@yarbo.com

3100 Golf Rd, Unit B, Rolling Meadows, IL 60008, United States

V1.9.1