YARBO

2024

USER MANUAL

LAWN MOWER

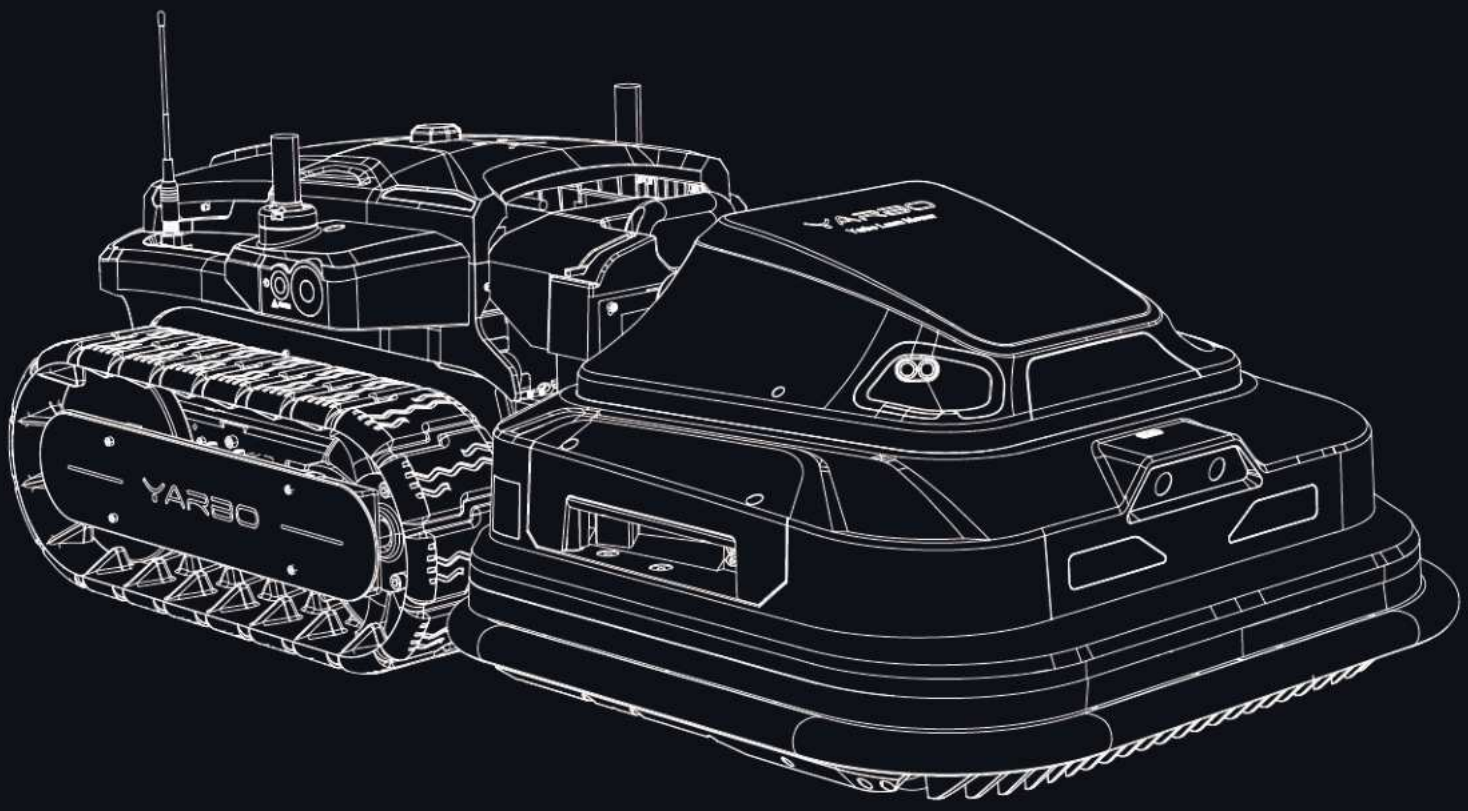

User Manual

Video Assembly Gu

YARBO

Table of Contents

Welcome

Box Content Introduction

1.1 Yarbo Core Content 01
1.2 Smart Assist Module Box Content 01
1.3 Lawn Mower Box Content 03
1.4 Docking Station Box Content 04
1.5 Battery Box Content 04
1.6 Product Overview 05

Installation Guide

2.1 Assembling Lawn Mower 07
2.2 Installing Yarbo App 11
2.3 Installing the Data Center 12
2.4 Installing the Docking Station 26

Yarbo App

Features Statement 27

Physical Controller Instruction

4.1 Connecting Yarbo Controller 30
4.2 Yarbo Controller Holder Installation Guide 32
4.3 LED Indicator Description 37

Charging

5.1 Charging Yarbo With Wired Charger 38
5.2 Charging Yarbo With Docking Station 39

Maintenance Guide

6.1 Before Conducting Any Maintenance 40
6.2 Cleaning Yarbo Core 41
6.3 Installing Tow Hitch 42
6.4 Replacing Cutting Blade 43
6.5 Applying Grease on the Tracks 44
6.6 Updating Firmware 45
6.7 Keeping Battery at Its Best Performance 45

Specification

7.1 Yarbo Core 46
7.2 Yarbo Lawn mower Module 47
7.3 Yarbo Docking Station 48
7.4 Yarbo Battery 49

Limited Warranty

8.1 Residential Warrant Coverage 50
8.2 General Statement 52
8.3 Warranty Forfeiture 54

Table of Contents

Welcome



Thank you for purchasing Yarbo Lawn Mower. We are more than happy to welcome you to our user community. We understand your anticipa tion for this long-awaited yard robot to free yourself and your family members from the annoying cleaning routine. Before you start using our product, we kindly ask you to thoroughly read this user manual for proper usage.

1. Box Content Introduction

1.1 Yarbo Core Content

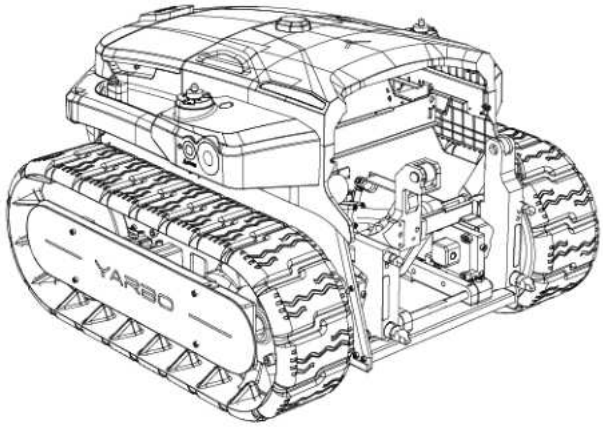

Yarbo Core



Data Center



Physical Controller & Controller Holder & Controller Power Adapter

1.2 Smart Assist Module Box Content



Smart Assist Module



POE Power Adapter



2 meter Ethernet Cable



30 meter Ethernet Cable



High RTK Antenna Mount

1. Box Content Introduction


Allen Key #1


Allen Key #2


Allen Key #3


Allen Key #4

Grass Pegs Screwdriver Head


x3
Grass Pegs for Mount


Battery Cover Wrench


x2
Anti-theft Screws for Battery Cover


L-Shaped Socket Wrench for Track


x20
Data Center Cable Clip


x3
Wood Nails for Mount


Screwdriver Head for Wood Nails



Spare Screws


x3
Expansion Bolts for Mount


x7
Connection Bolts for Pole


x1
T-joint of Data Center


x1
T-joint Cap


Track Wrench


Extension Pole of Data Center


Standard Pole of Data Center


Data Center Mount


x2
Tow Hitch Screws


RTK Antenna for Data Center


Tow Hitch (Optional)


x6
Low RTK Antenna Mount Bolts


x4
Low RTK Antenna Mount Connection Bolts


x2
Low RTK Antenna Mount


Screwdriver for Low RTK Antenna Mount Connection Bolts


x2
Simple Wrench


x6
High RTK Antenna Mount Bolts



x2
Track Side Plate


Wire charger

Bluetooth Antenna for Data Center


HaLow Antenna for Rover

HaLow Antenna for Data Center


HaLow Antenna Clip for Data Center


Clevis Pin


Clip bushing

R-clip

1. Box Content Introduction

1.3 Lawn Mower Box Content

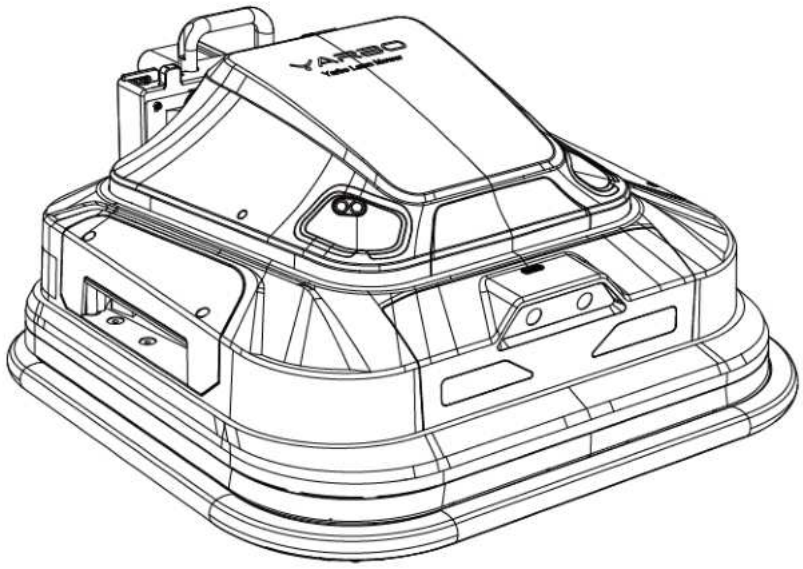

Lawn Mower Module



Lawn Mower User Manual



Lawn Mower Quick Start Guide



Module Vertical Stand



Phillips-Head Screwdriver



x20
Spare Cutting Blades



x8
Cutting Discs Spare Bolts



x20
Cutting Blade Spare Bolts

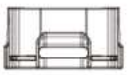

Rubber Connection Cover

1.4 Docking Station Box Content

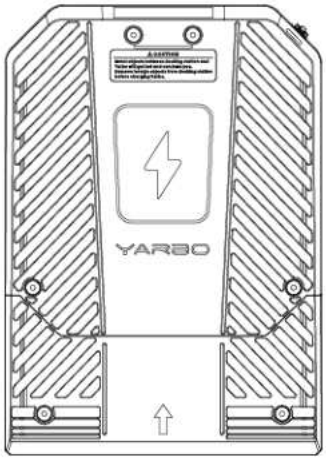

Docking Station Charging Unit



x12
Grass Pegs



Power Cable for Docking Station

x12
Expansion Bolts for Docking Station



Short Cable Ramp



Long Cable Ramp

1.5 Battery Box Content ❶



Battery

1. Box Content Introduction

1.6 Product Overview

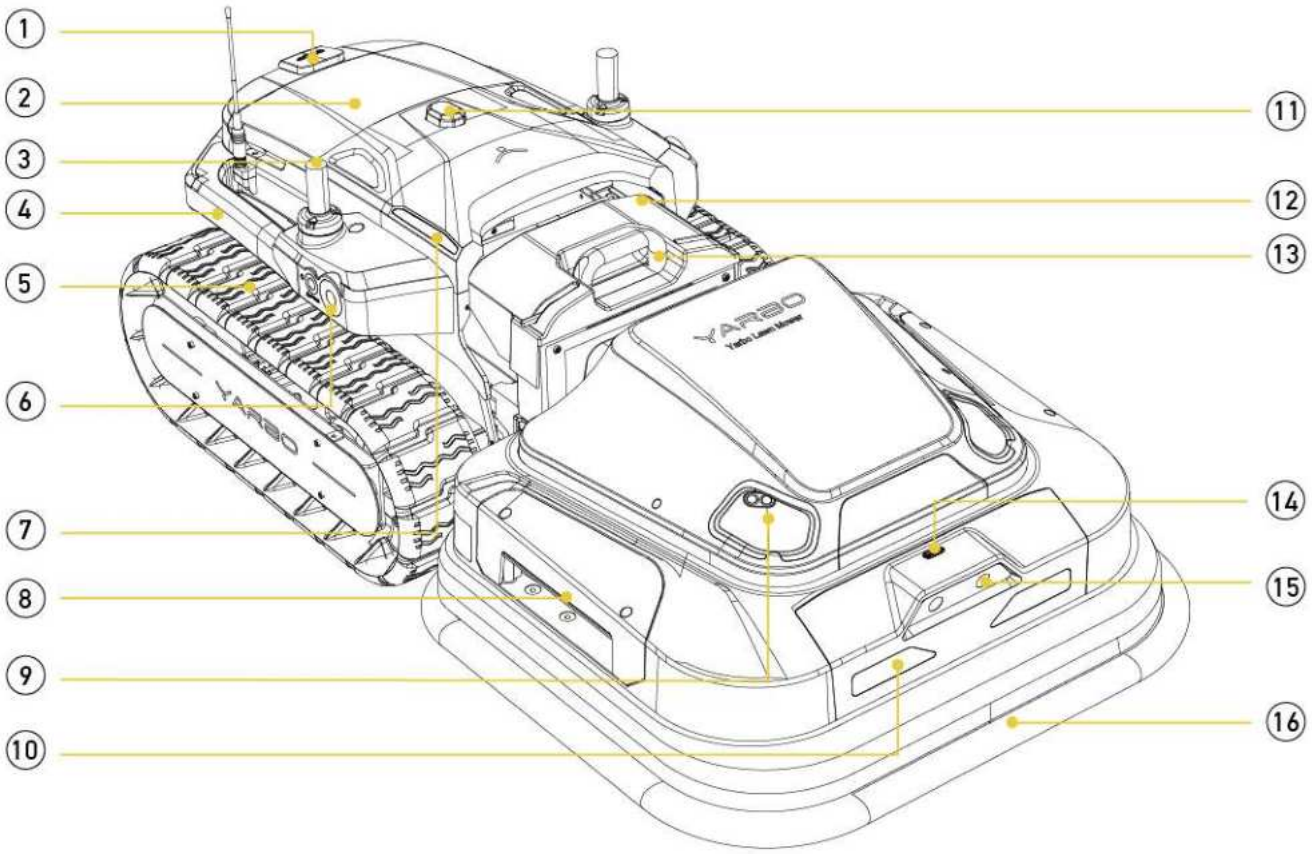

1. Emergency Stop Button
2. Battery Cabin
3. RTK antenna
4. Lifting Handle
5. Lawn Track
6. Side Camera
7. Battery Indicator Light
8. Lifting Handle
9. Ultrasonic Radar
10. Front Light
11. Warning Light
12. Rubber Cover for Module Connection
13. Lifting Handle
14. Rain Sensor
15. Front Binocular Camera
16. Bumper

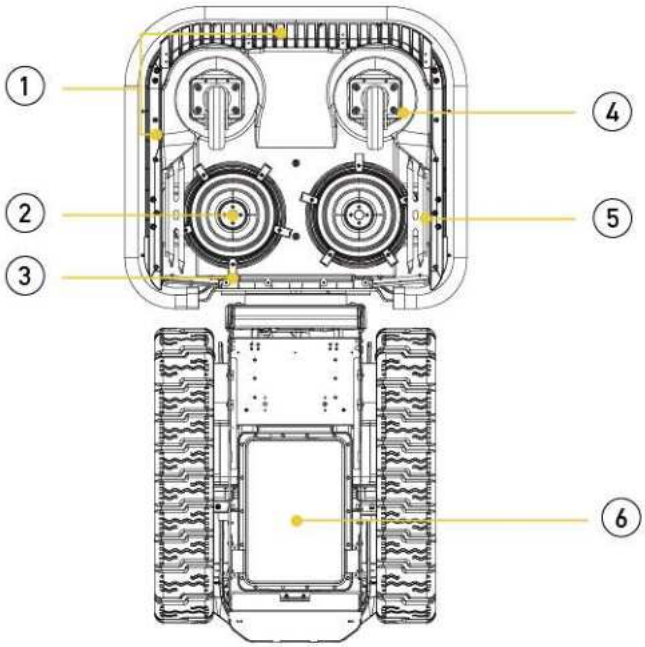

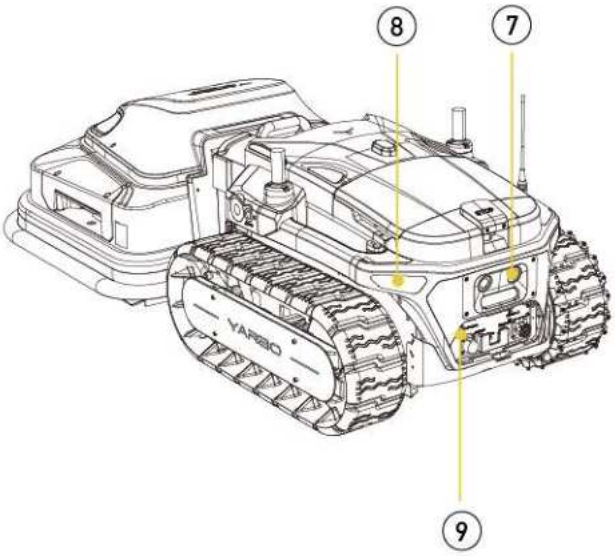

1. Skid Skirt
2. Cutting Disc
3. Cutting Blade
4. Caster Wheel
5. Blade Guard
6. Wireless Charging Receiver
7. Rear Binocular Camera
8. Rear Light
9. Power Switch

Data Center

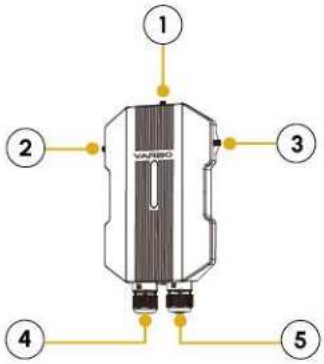

1. RTK Antenna Port
2. HaLow WiFi Antenna Port
3. Bluetooth Antenna Port
4. POE WAN Port
5. POE LAN Port

2.Installation Guide

2.1 Assembling Lawn mower

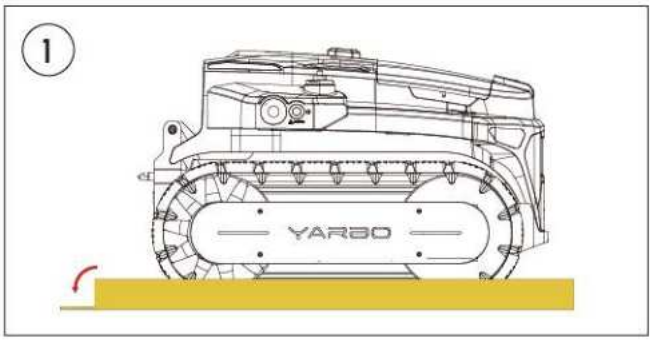

Cut the box along the cutting line on the bottom of the packaging box.

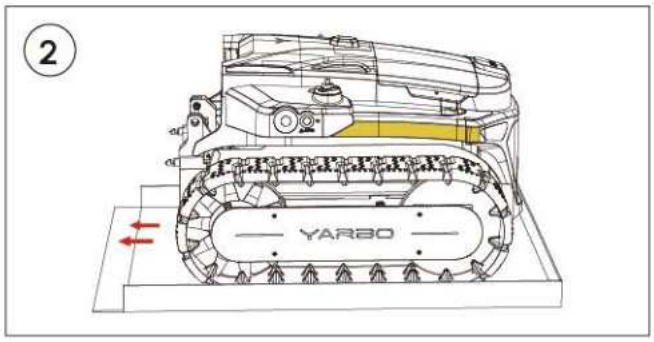

Grasp the lifting handles of the Yarbo Core and **push** the Yarbo Core out from the packaging box.

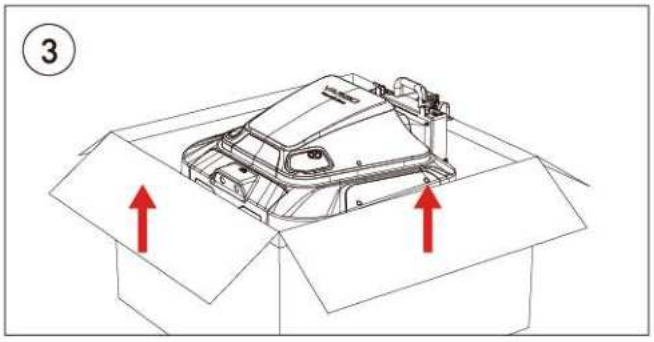

Carefully **lift** the Lawn Mower Module out of the packaging box by grasping the lifting handle.

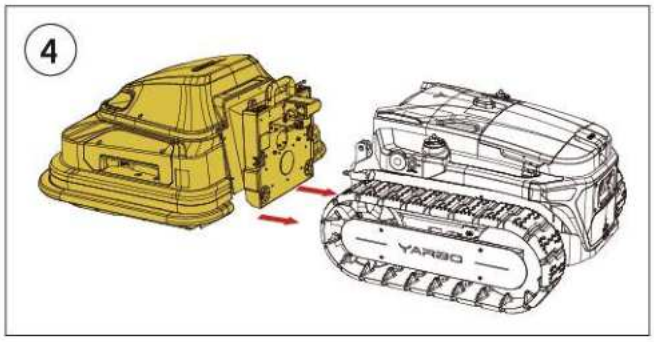

Pull the Lawn Mower Module close to the Yarbo Core by **grasping** the lifting holder on both sides, ensuring that the two parts are prepared closely enough to connect the cable.

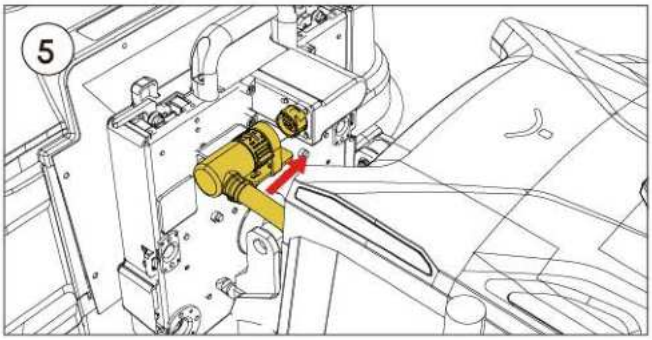

Carefully **insert** the cable into the port on the Lawn Mower Module, ensuring that both are properly aligned and securely connected.

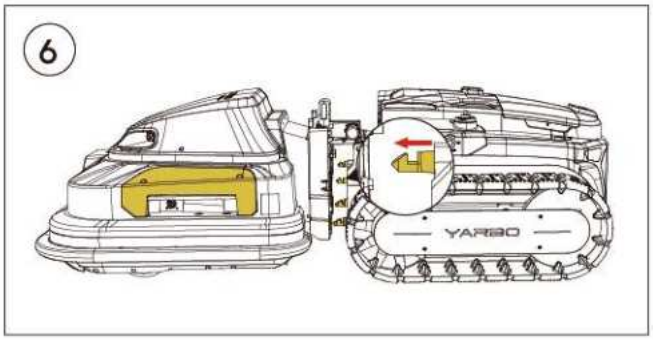

Lift the Lawn Mower Module by **grasping** the holder and **locate** the shafts and holes in the Yarbo Core and Lawn Mower Module. Slightly **push** the Lawn Mower Module towards the Yarbo Core after the proper alignment.

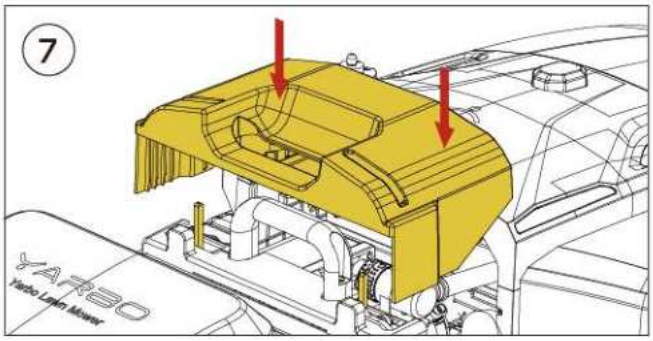

Lift the two locks on the sides. **Locate** the the Plastic Connector Cover provided and **install** it onto the connection part of Lawn Mower.

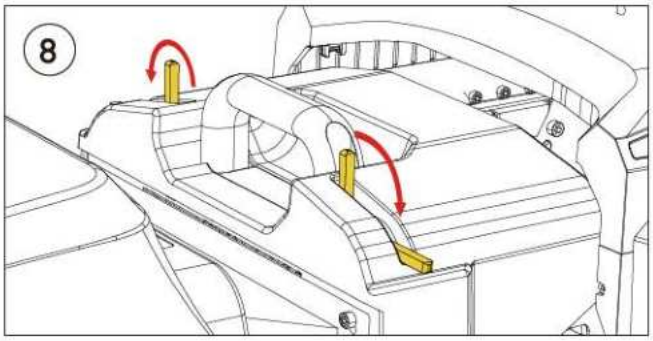

Push down the two locks on both sides.

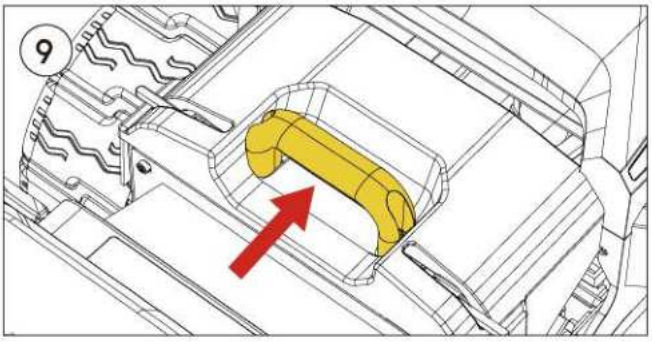

Push the connection part holder until you hear or feel a click.

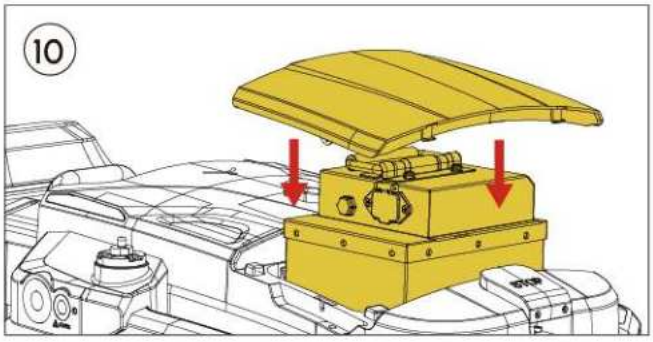

Lift the battery cover and **place** the battery into the battery cabin.

2.Installation Guide

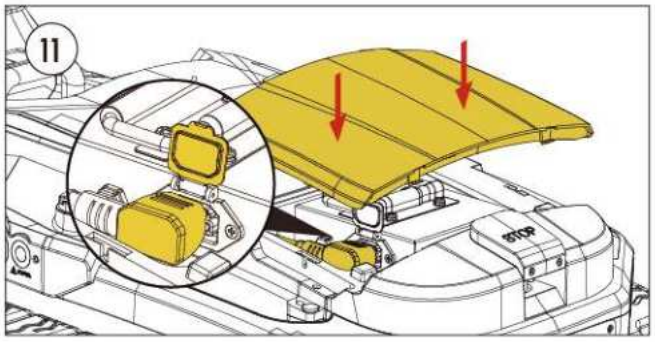

Remove the cover by grasping both sides with your hands and lifting. Place the battery inside the chamber and **connect** the cable from the Yarbo Core to the battery.

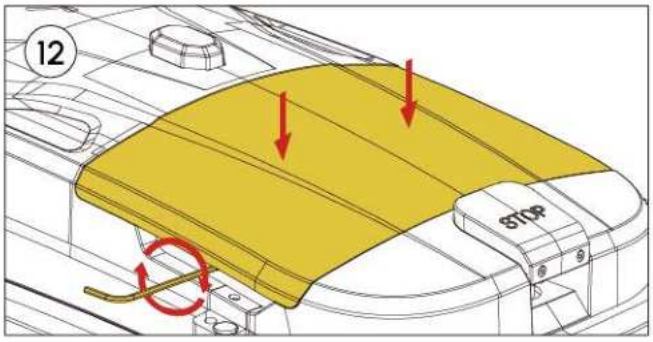

Replace the cover and **screw** the Anti-theft Bolts on both sides using Battery Cover Wrench provided in the package.

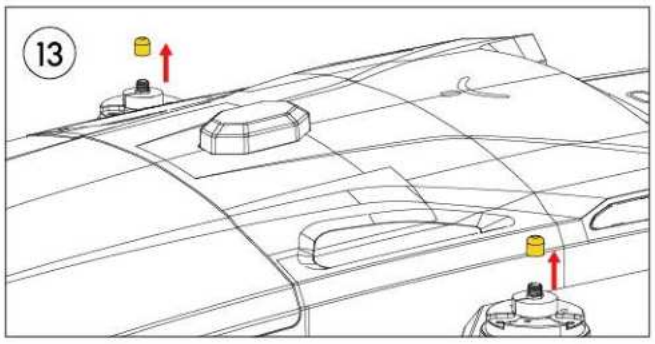

Locate the red screw caps on the RTK Antenna Mounts and **remove** them.

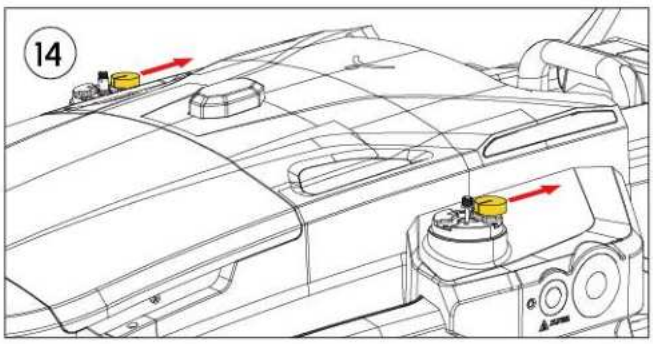

Remove the rubber rings on the RTK Antenna Mounts.

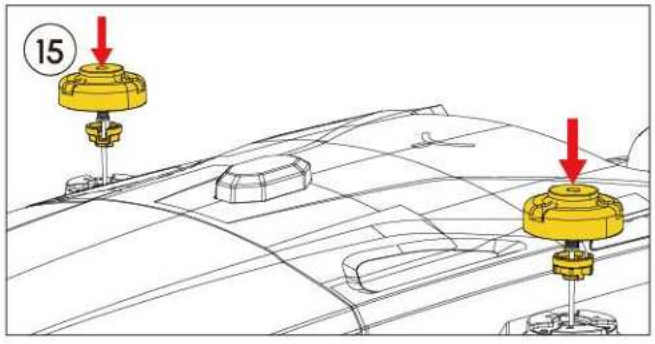

Locate the Low RTK Antenna Mounts provided in the package. **Insert** the antenna cable into the fitting so the connector is accessible.

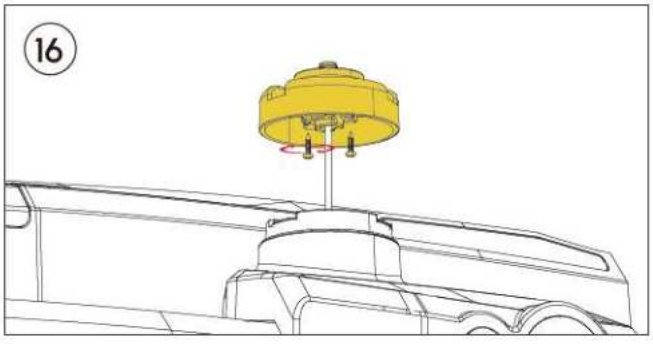

Locate the Low RTK Antenna Mount Connection Bolts and screw the bolts to fasten the connections on both sides.

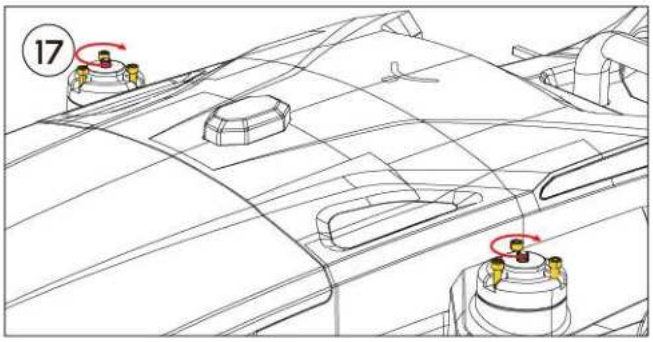

Screw the three connection bolts on both sides of the Yarbo Core by using Allen Key#2.

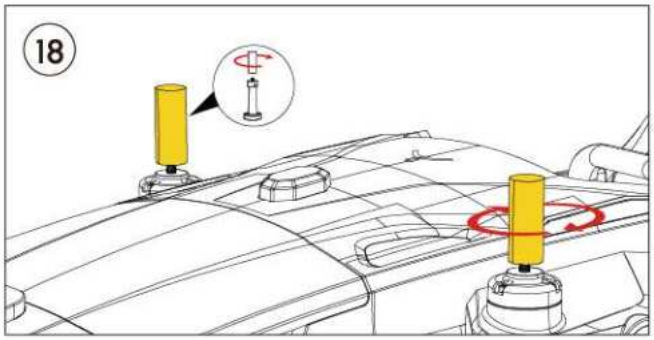

Locate the Low RTK Antennas and screw them on the RTK Antenna Mounts.

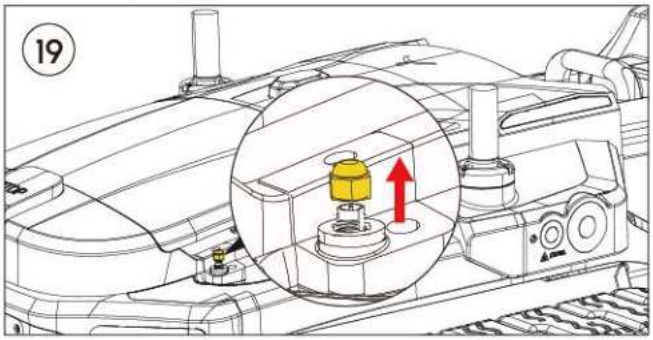

Remove the white screw cap on the HaLow Antenna Mount. Keep the black rubber ring in for waterproofing.

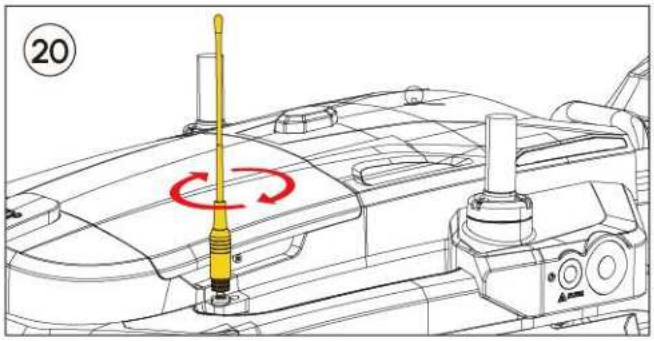

Locate the HaLow Antenna and screw the antenna into the HaLow Antenna Mount until hand tight.

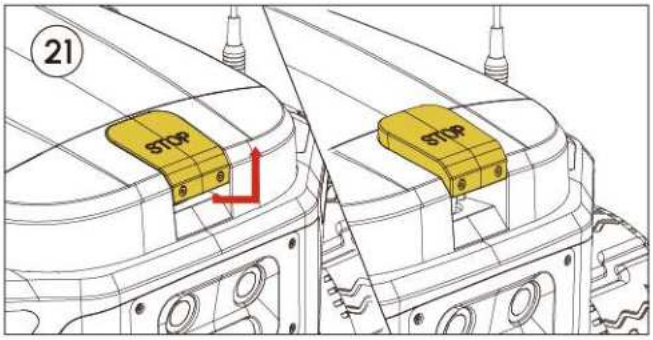

Lift the Emergency Stop Button.

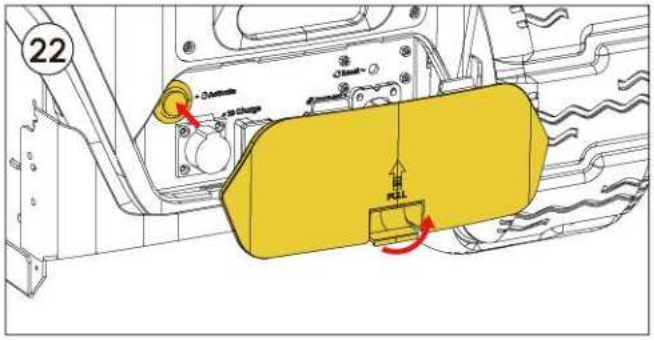

Remove the rear cover. **Press** power button to turn on Yarbo. **Place** back the rear cover.

⚠ OPTIONAL REPLACEMENT

- Track Side Plates replacement is recommended for better protection especially in winter. If required, please locate the Track Side Plates in the Smart Assist Module Box and replace them using Allen Key #3.



2.2 Installing Yarbo App

The Yarbo App is a professional application that empowers you to manage and control your Yarbo anytime, anywhere, elevating your snow cleaning experience to new heights. With its impressive features, you can easily set up work schedules, define multiple working areas and no-go zones, and monitor Yarbo's operating status. Additionally, you can receive the latest firmware updates and access instruction manuals, video tutorials, FAQs, and more through the App.

Follow these simple steps to install and set up the Yarbo App:

① Download the Yarbo App by scanning the QR code below or searching on the app store.
② After installation, log in to your Yarbo account. If you don't have one, please register.
③ Follow the steps of the first-time user guide on the app. If there are few steps that are hard to understand, please refer to the app section of this user manual.

*Note: Once a device is associated with a Yarbo account, it cannot be linked to a new account. However, you can invite others to use your Yarbo through Yarbo Sharing in the app.

iOS

Available on the App Store

Android

GET IT ON Google Play

2.3 Installing the Data Center

Method 1 Roof and Wall Installation(Recommended)

Make sure there's a clear view of the sky with at least 120 degrees of unobstructed view. The higher you can mount the Data Center, the more stable the RTK signal will be.



Method 2 Ground Installation

Make sure there's a clear view of the sky with at least 120 degree of unobstructed view.



⚠ CAUTION

- Please read through all the following installation methods, and make sure you understand how to use required tools before installation.

⚠ NOTICE

- The most important thing for installing the Data Center Set is to ensure that the Data Center have a 120° unobstructed view of the sky. Please choose the most suitable method for your home. Additionally, the Data Center requires a wired network connection (A 30-metre-long Ethernet cable is provided), so it is necessary to find a location where the Data Center is not too far from the router in your house and has a 120° unobstructed view of the sky.

2.3.1 Installation Preparation

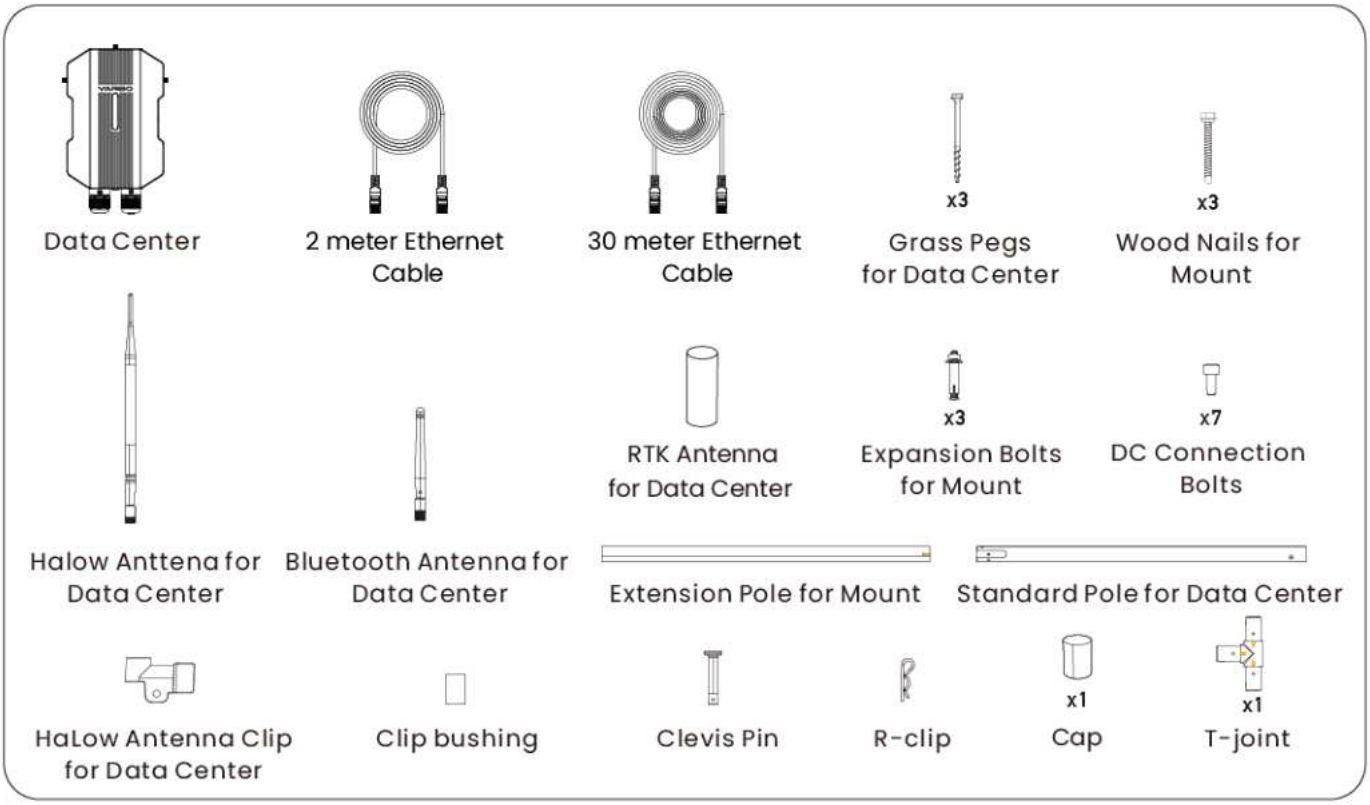

⚠ WARNING

- Given the recommendation to install the Data Center at the top of a house, it is crucial to implement comprehensive lightning protection measures to safeguard against potential damage caused by lightning strikes. In areas where lightning activity is frequent, the risk of such damage increases significantly. We strongly advise those residing in high-lightning-activity regions to buy a grounding cable. This critical component allows for the safe dissipation of excess electrical current into the earth, minimizing the risk of Data Center damage.

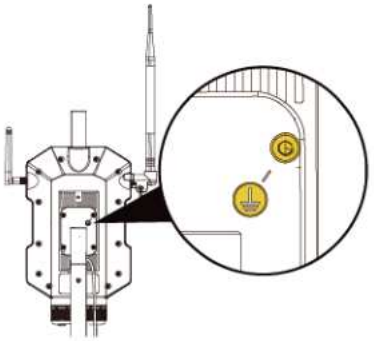

2.3.2 Data Center Installation

NOTICE

- Please make sure that the place you choose for insatallation has a clear of the sky with at least 120 degree of unobstructed space.

Method 1 Roof and Wall Installation

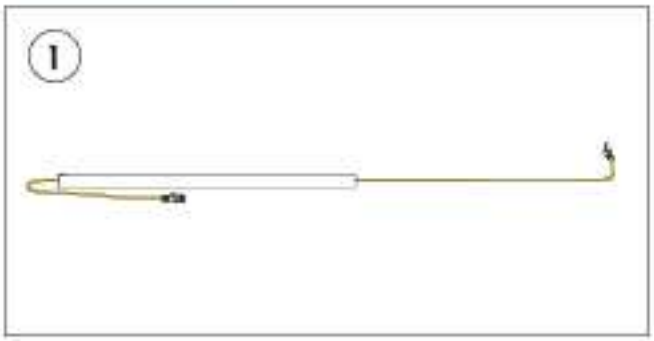

Locate the 30m Ethernet Cable and extension pole provided in the Yarbo Core box. **Thread** the Ethernet cable through the extension pole.



Press the cable into the crevice of the T-joint as shown in the picture. **Connect**the Extension Pole to the T-joint by pressing the round button on the T-joint and aligning this button with the hole in the Extension Pole.

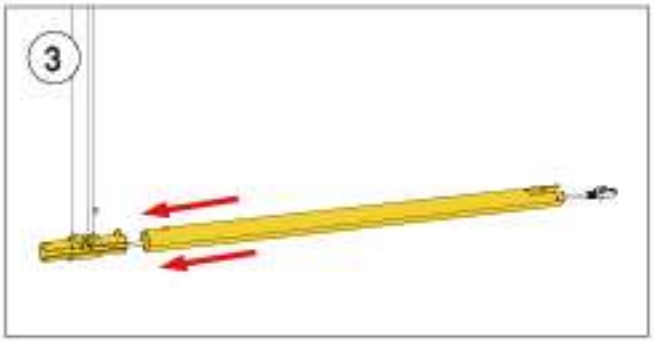

Press the round button on the T-joint and **align** it with the hole in the Standard Pole to connect two parts and secure the connection.

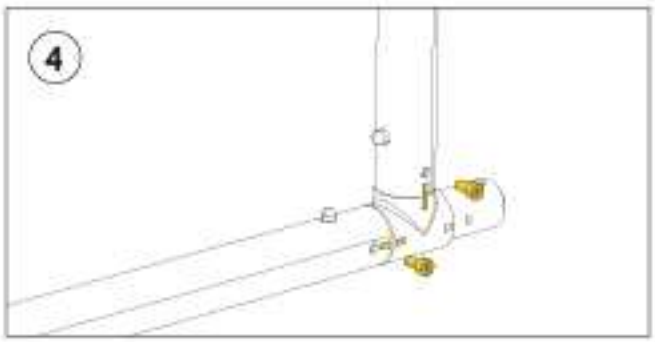

Screw the two Connection Bolts into the holes provided to stabilize the T-joint, Standard Pole and Extension Pole.

2.3.2 Data Center Installation

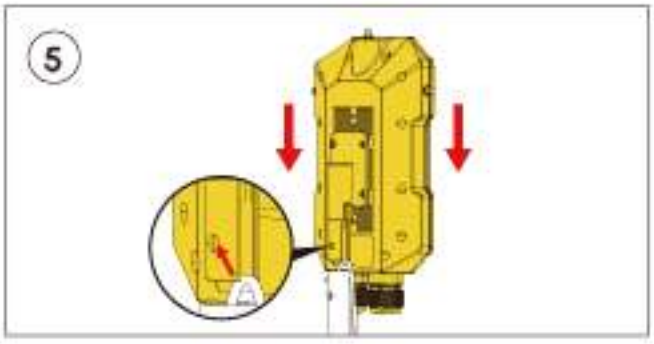

Connect the Data Center to the Extension pole (press the small button on the Data Center and align this button with the hole in the pole). **Pull out** a small section of the cable to ensure it can be reached and connected to the Ethernet POE WAN port.

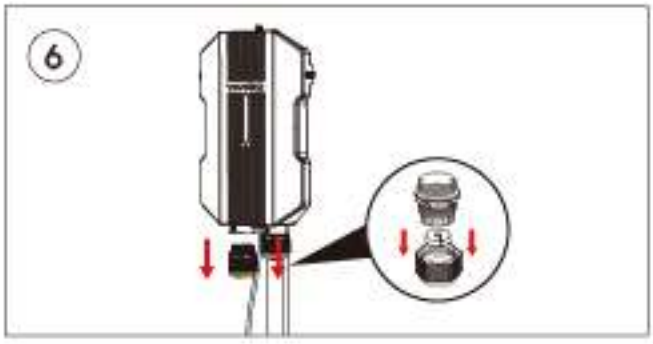

Carefully unscrew the entire gland set on the WAN port of the Data Center. **Remove** the gland cover and **push out** the black rubber plug.



Thread the Ethernet Cable through the gland and its cover. **Locate** the opening of the black rubber plug and **snap** it onto the Ethernet Cable.

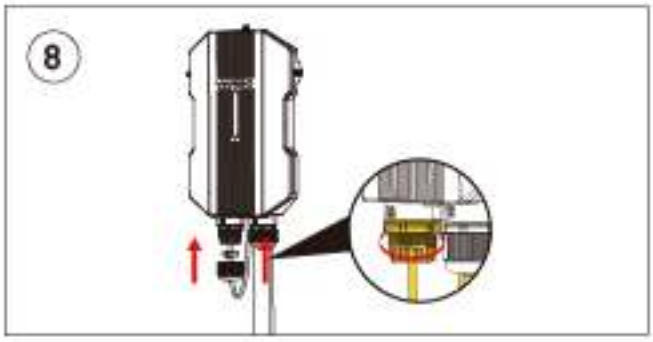

Connect the Ethernet Cable to the WAN port and **tighten** the gland by screwing it in.



Push the black rubber plug into the gland.



Screw and **tighten** the cover of the gland.

2.3.2 Data Center Installation

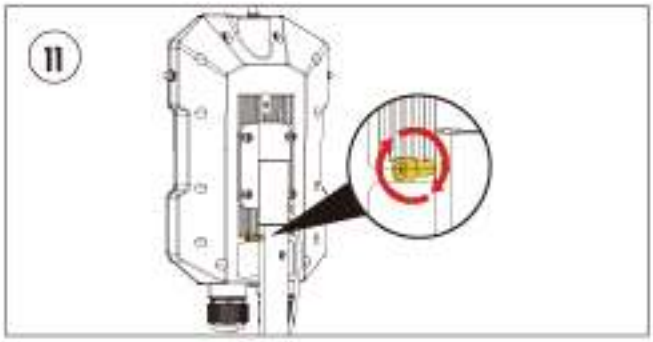

Screw in the connection bolt to fasten the Data Center to the Extension Pole.

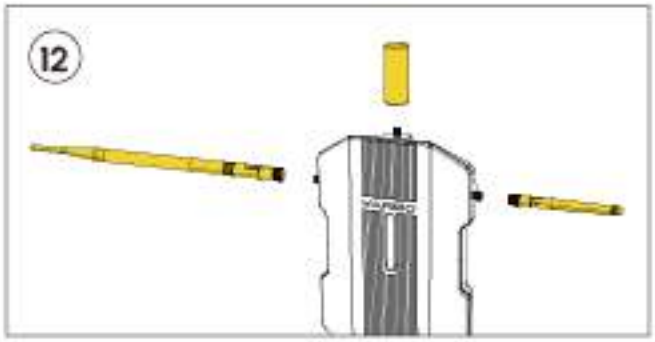

Locate the three antennas provided in the Yarbo Core box and attach them as shown and securely **tighten** them.

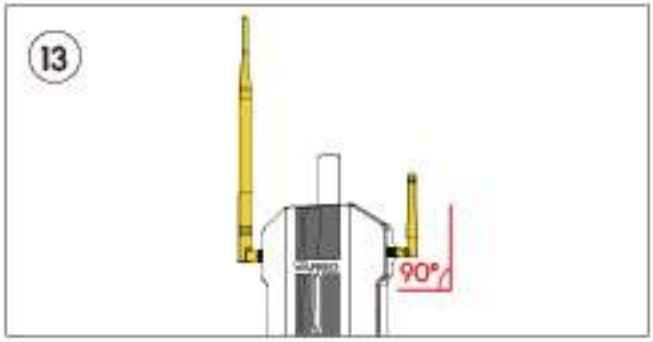

Position the HaLow Antenna and Bluetooth Antennas at a 90-degree angle, directing them upwards towards the sky.

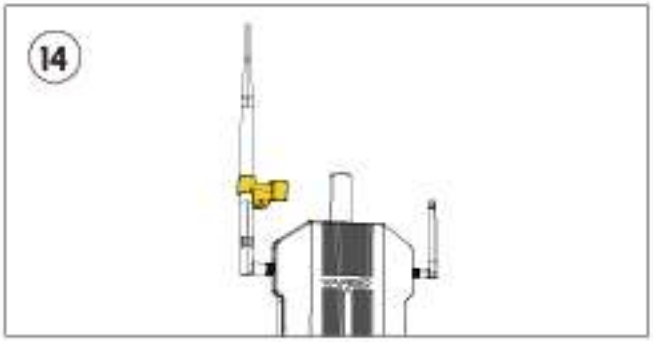

Locate the HaLow Antenna Clip and **slide** it over the HaLow Antenna.

NOTICE

- If it is impossible to drill through the wall or other hard material, the cable can be dragged out from the side of the mount.

2.3.2 Data Center Installation

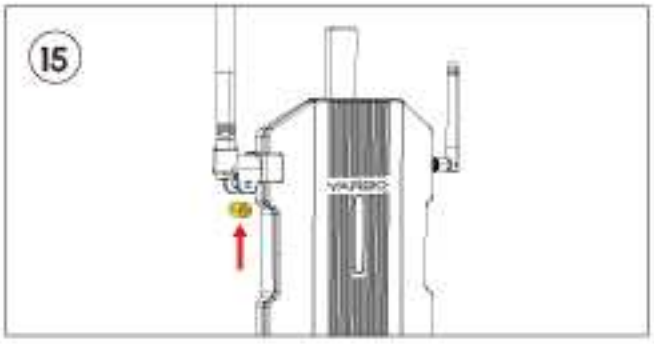

Move the HaLow Antenna Clips to the bottom of the Halow Antenna and **snap** the Data Center. Then insert the Clip bushing.

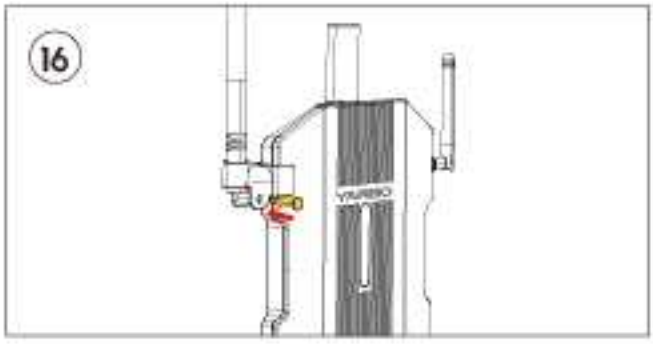

Tighten the Clevis Pin to ensure that the antenna is secure.

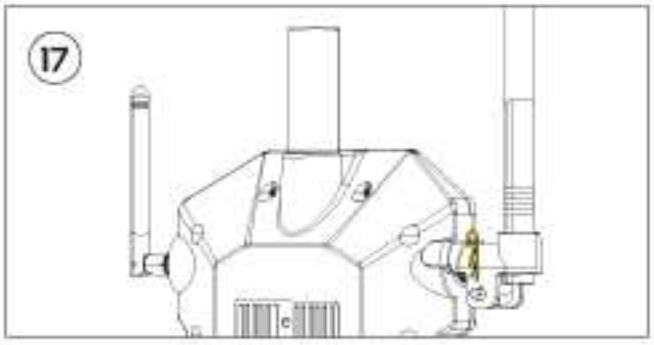

Pass the R-clip through the hole in the Clevis Pin past the first bend to insure the Clevis Pin is secure.

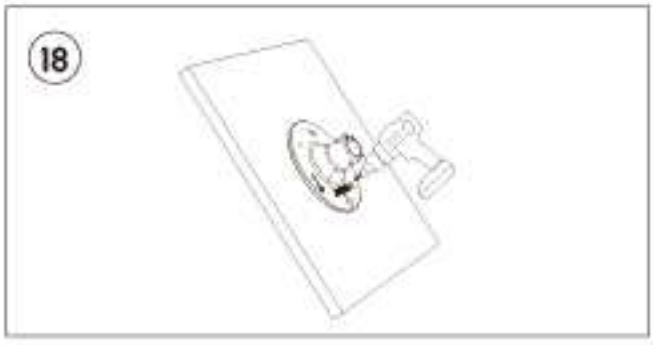

Position the mount at the chosen installation site and follow the proper instructions (**BELOW**) for the surface you are mounting the base too.

If you are threading the cat5 cable through the pole you will need to mark the position of the center hole in the mounting base and drill a ¾ inch or 19mm hole to insert the cat5 cable through.

Wooden surface	Predrill the three outer holes using a ¼ inch or 6mm drill for the wood screws used to mount the base.
Cement, brick, mortar	Predrill the three outer holes using a 2/5 inch or 1 drill for the anchor bolts used to mount the base.
Lawn	Anchor the base using three lawn screws using the lawn screw driver bit included.

2.3.2 Data Center Installation

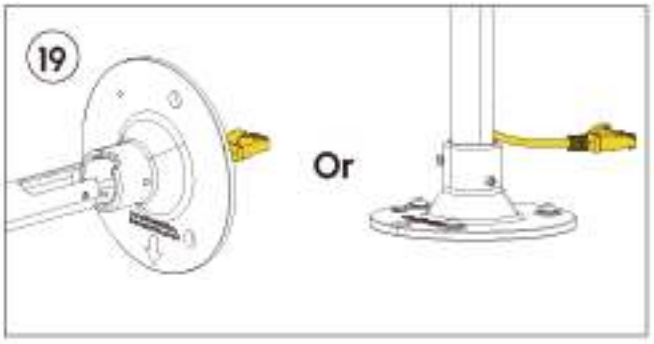

Thread the Ethernet Cable through the middle hole of the mount, or **pull out** the Ethernet Cable through the opening or gap in the pole carefully.

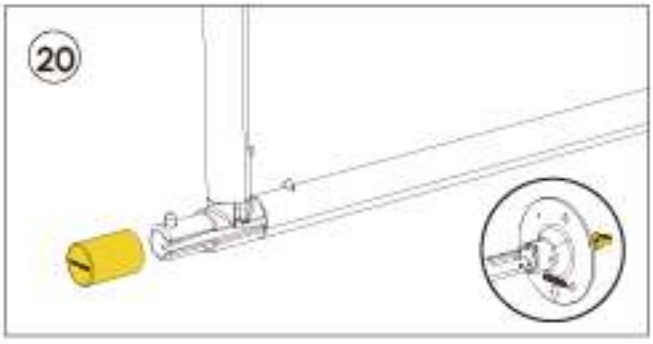

Attach the cap securely to the side of the T-joint.

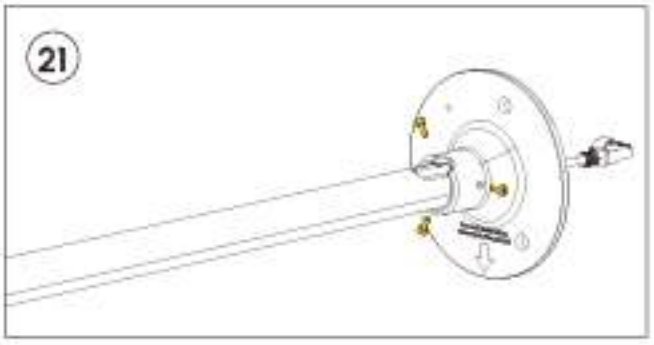

Screw in three Connection Bolts for Pole to stablize the mount and Standard Pole.

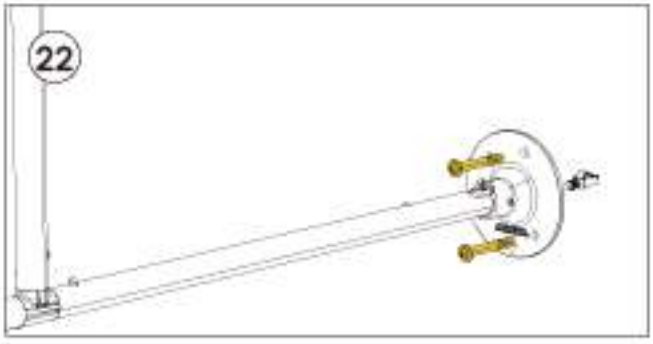

Secure the mount by fastening the three Connection Bolts (**As described above**-) needed for your installation surface.

⚠ WARNING

- When installing the Data Center Set on the roof, exercise extreme caution. Ensure compliance with local regulations regarding working at heights and always use appropriate safety equipment.

2.3.2 Data Center Installation

NOTICE

- Please make sure that the place you choose for insatallation has a clear of the sky with at least 120 degree of unobstructed space.

Method 2 Ground Installation

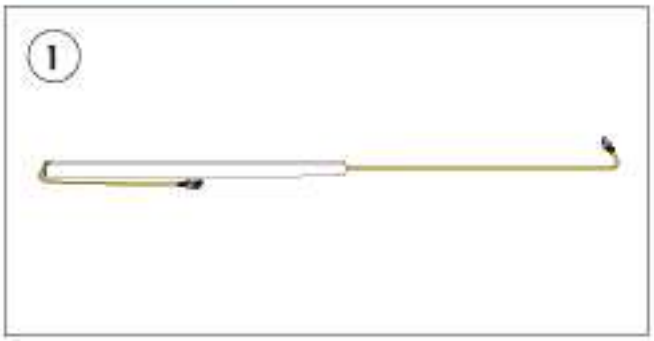

Locate the Ethernet Cable and extension pole provided in the Yarbo Core box. **Thread** the Ethernet Cable through the Extension Pole.

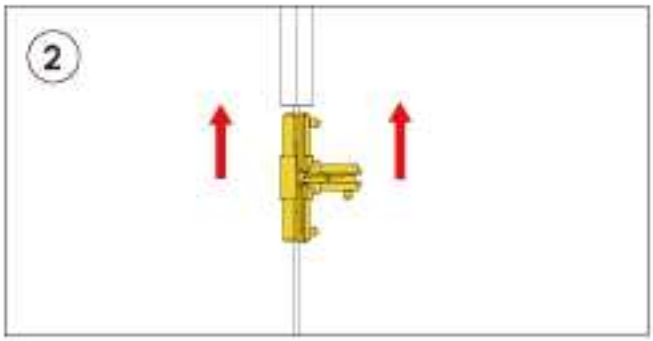

Press the cable into the crevice of the T-joint as shown in the picture. **Connect**the Extension Pole to the T-joint by pressing the round button on the T-joint and aligning this button with the hole in the Extension Pole.

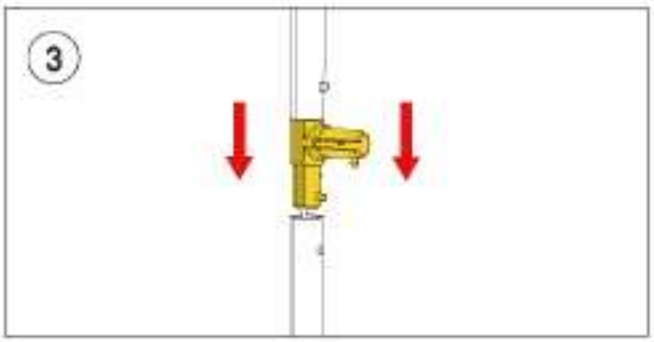

Press the round button on the T-joint and **align** it with the hole in the Standard Pole to connect two parts and secure the connection.

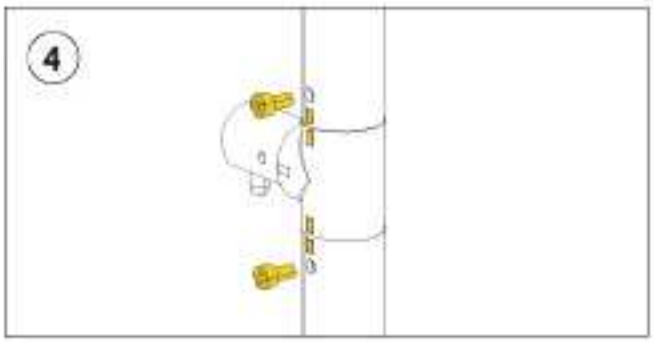

Screw the two Connection Bolts into the holes provided to stabilize the T-joint, Standard Pole and Extension Pole.

2.3.2 Data Center Installation

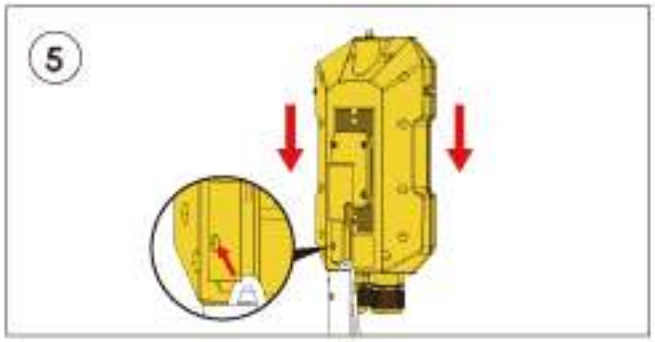

Connect the Data Center to the Extension pole (press the small button on the Data Center and align this button with the hole in the pole). **Pull out** a small section of the cable to ensure it can be reached and connected to the Ethernet POE WAN port.

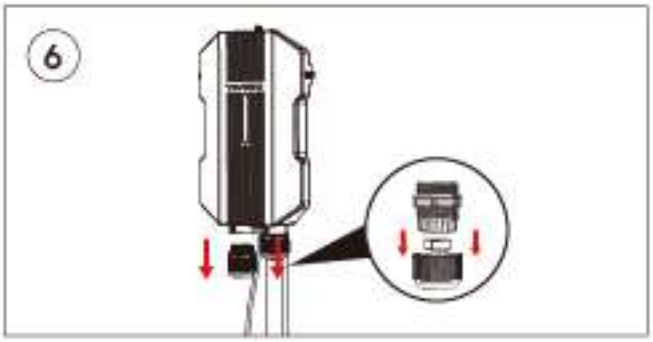

Carefully **unscrew** the entire gland set located on the WAN port of the Data Center. **Remove** the gland cover and **push out** the black rubber plug.



Thread the Ethernet Cable through the gland and its cover. **Locate** the opening of the black rubber plug and **snap** it onto the Ethernet Cable.

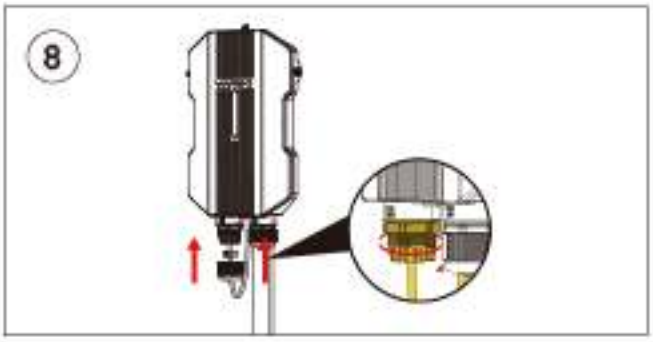

Connect the Ethernet Cable to the WAN port and **tighten** the gland by screwing it in.



Push the black rubber plug into the gland.

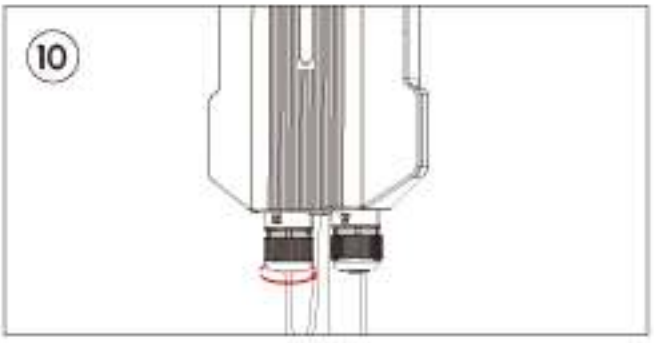

Screw and **tighten** the cover of the gland.

2.3.2 Data Center Installation

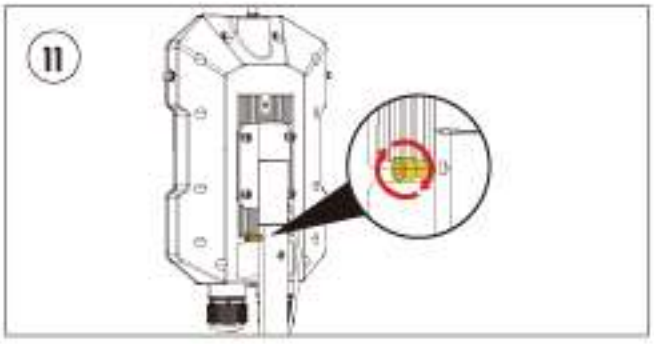

Screw in the connection bolt to fasten the Data Center to the Extension Pole.

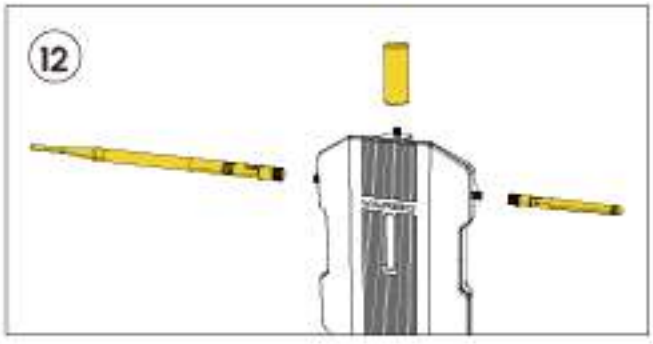

Locate the three antennas provided in the Yarbo Core box and attach them as shown and securely **tighten** them.

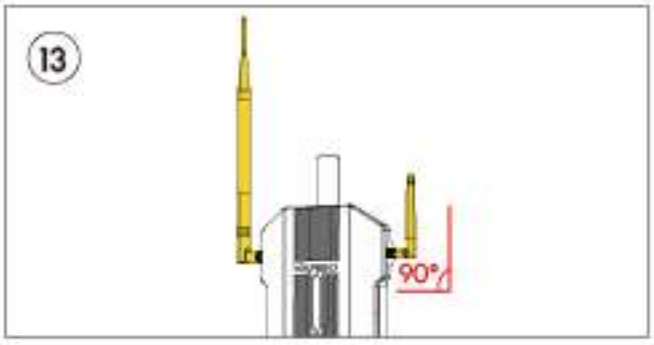

Position the HaLow Antenna and Bluetooth Antennas at a 90-degree angle, directing them upwards towards the sky

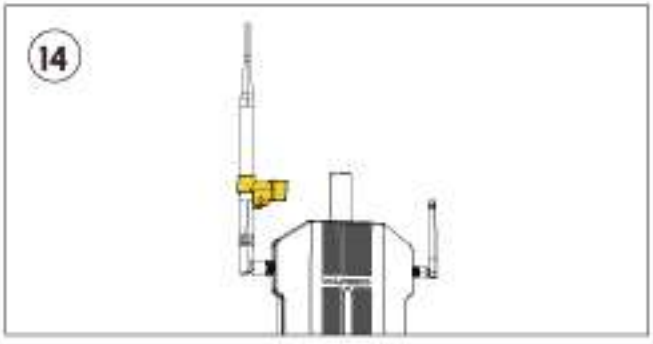

Locate the HaLow Antenna Clip and **slide** it over the HaLow Antenna.

NOTICE

- If it is impossible to drill through the wall or other hard material, the ethernet cable can be dragged out from the side of the mount.

2.3.2 Data Center Installation

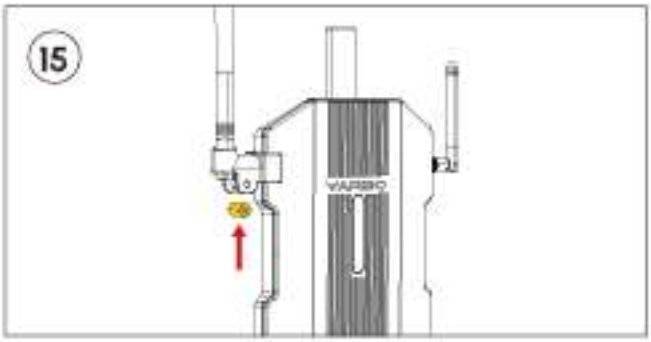

Move the HaLow Antenna Clips to the bottom of the Halow Antenna and **snap** the Data Center. Then insert the Clip bushing.

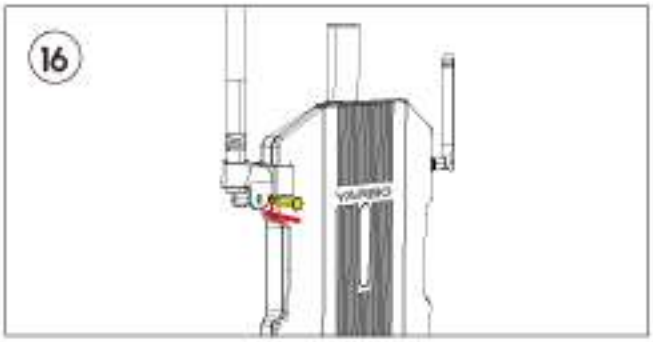

Tighten the Clevis Pin to ensure that the antenna is secure.

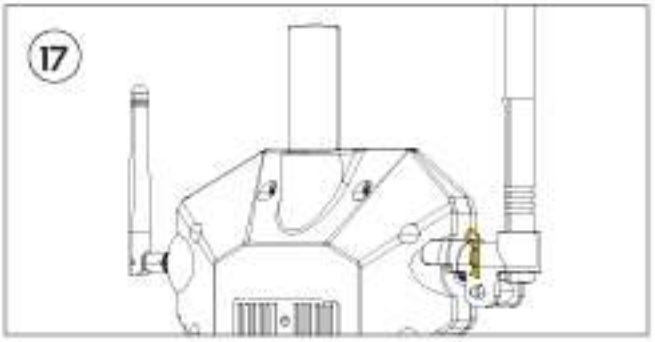

Pass the R-clip through the hole in the Clevis Pin past the first bend to insure the Clevis Pin is secure.

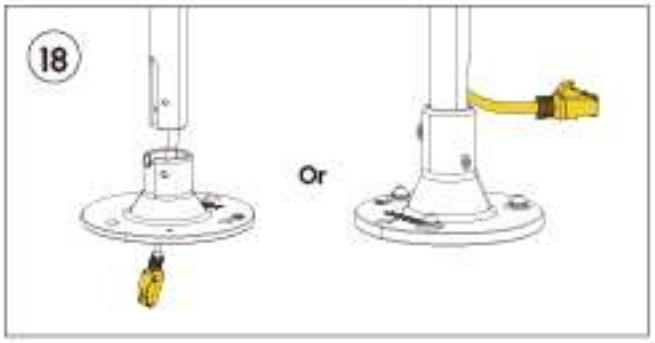

Thread the Ethernet Cable through the middle hole of the mount, or **pull out** the Ethernet Cable through the opening or gap in the pole carefully.

2.3.2 Data Center Installation

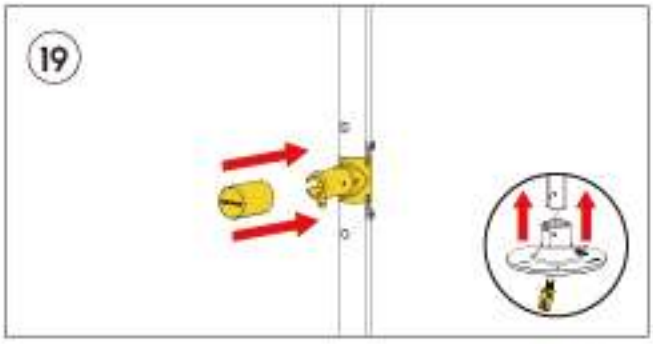

Attach the cap securely to the side of the T-joint.

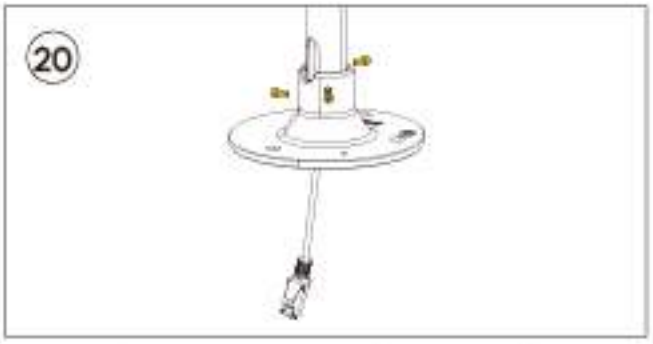

Screw in three connection bolts for pole to stablize the mount and Standard Pole.

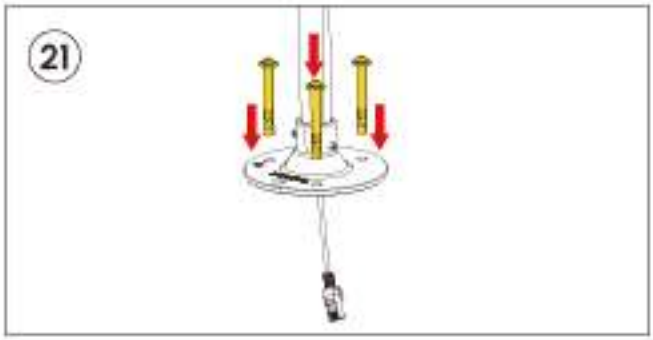

Secure the mount by fastening the three Connection Bolts (**As described above-**) needed for your installation surface.

⚠ WARNING

- When installing the Data Center Set on the roof, exercise extreme caution. Ensure compliance with local regulations regarding working at heights and always use appropriate safety equipment.

2.3.3 Ethernet Cable Connection

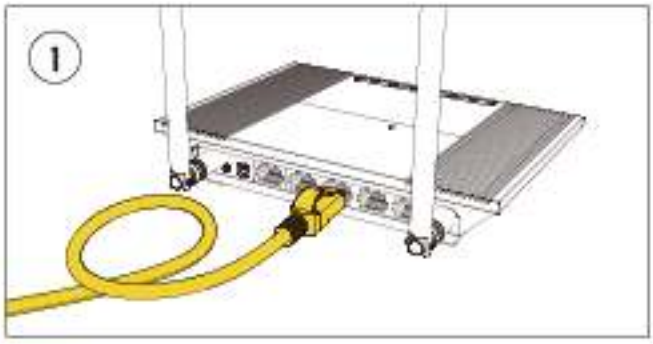

Locate the 2-meter long Ethernet Cable and the POE power adapter provided in the Yarbo Core Box, and **connect** one end of the Ethernet Cable to the LAN port on the router.

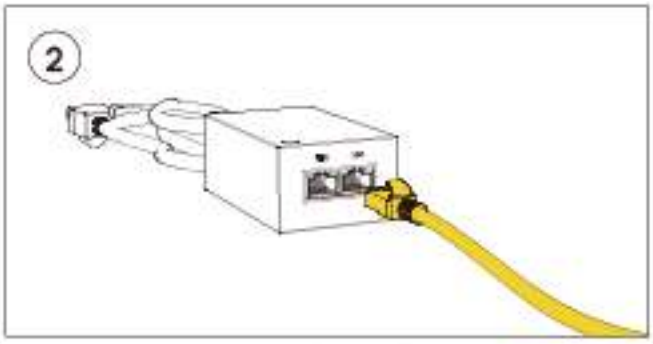

Connect the other side of the Ethernet cable to the LAN port of POE power adapter.

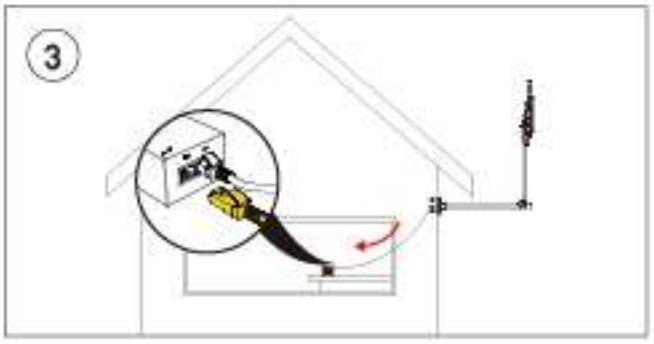

Pull out the 30-meter Ethernet Cable that has been fed in from the Data Center setup. Connect one end to the POE port of the POE power adapter. The other end should already be connected to the WAN port of the Data Center.

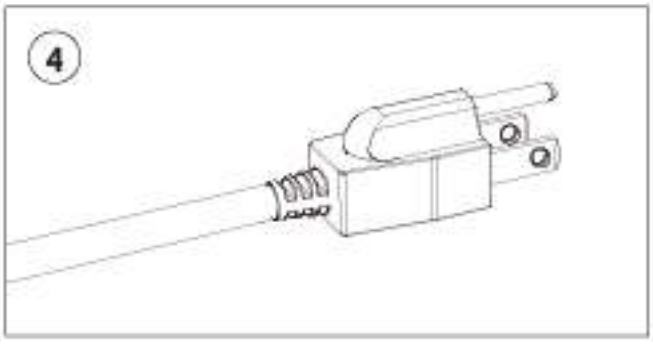

Connect the power cord to the POE adapter and insert the plug of the power cord into an electrical outlet.

2.3.4 Data Center Signal Lights

LED Indicator	Status	Description	Action
Solid Green	Normal	1. Normal RTK Signal 2. Normal Internet Connection	/
Flashing Red	RTK Signal abnormal	1. No RTK Signal	Check cable connection is correct, inspect if RTK antenna is broken or loose
Flashing Blue	Pairing mode	1. Pairing mode activated	/
Solid Blue	Pairing successful	1. Pairing is successful	/

NOTICE

- This appliance can be used by children aged from 8 years and above and persons with reduced physical,sensory or mental capabilities or lack of experience and knowledge if they have been given supervision or instruction concerning use of the appliance in a safe way and understand the hazards involved;
- Children shall not play with the appliance;
- Cleaning and user maintenance shall not be made by children without supervision;

WARNING

- For the purposes of recharging the battery, only use the detachable supply unit provided with this appliance.

2.4 Installing the Docking Station

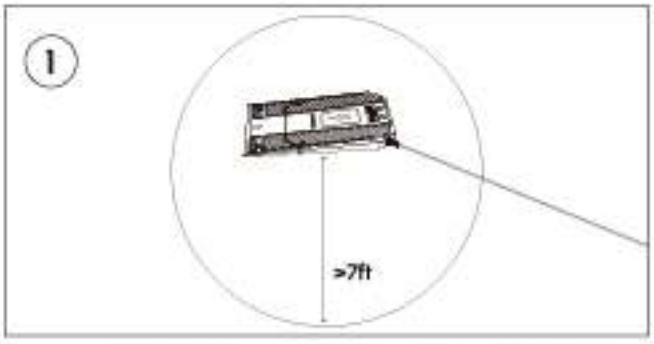

Ensure the installation location for the Docking Station has at least **7 feet** of clearance in all directions. Before proceeding, make sure you have already initialized Yarbo using the Yarbo App.

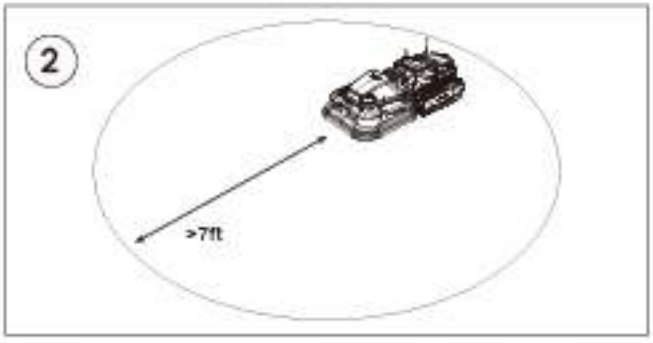

Drive Yarbo to the desired location for the Docking Station to test if there is strong GPS signal. Once Yarbo reaches a position with a strong GPS and network connection, the app will notify you.

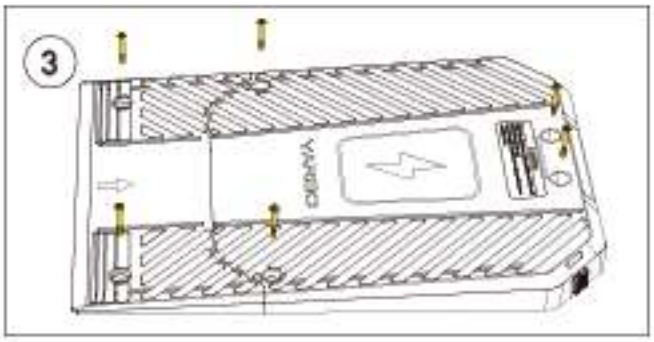

Place the Docking Station in the desired location. Secure the Docking Station by suitable methods. For soil/grass surface, use grass pegs. For concrete/brick surfaces, use expansion bolts. Grass pegs and expansion bolts are provided in the package.

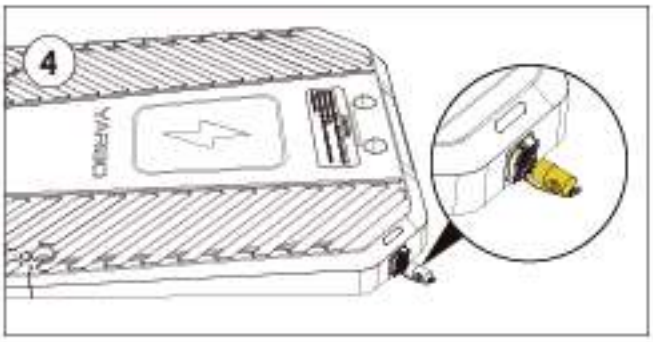

Press the snap and **remove** the cover.

2.Installation Guide



Connect the Power Cable to the port in the docking station.

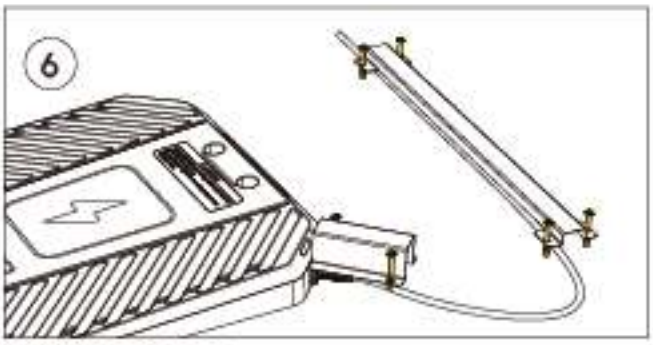

Place the Short Cable Ramp near the port and the Long Cable Ramp on the Power Cable. **Secure** the Cable Ramp by suitable methods.

NOTICE

- For safety protection, please correctly install the cable ramps and thoroughly inspect their stability, ensuring that there is no excessive compression or twisting between cable ramps and cables.
- Grass Pegs are recommended for soil or grass surface, and Expansion Bolts are recommended for For concrete or brick surface.

APP Tutorial

3.Yarbo App

Before you embark on your journey with our app, we encourage you to take a few moments to read through this user manual sicne Yarbo App serves as an important tool for the operation. As a result, understanding the features and acknowledging how it works is essential for maximizing your experience. Please refer to section 2.2.

3.1 Features Statement

1.Mapping

The mapping function is tailored for users to create a detailed map of the area where Yarbo to operate. Normally, A map encompass the docking station, pathways, woking areas, no-go zones. With the map, Yarbo can design its blowing route through intelligent algorithm and execute the work plan depending on the personal schedule. The provided picture serves as an example of the map, showing two designated working areas, one No-go Zone, two Pathways and docking station.

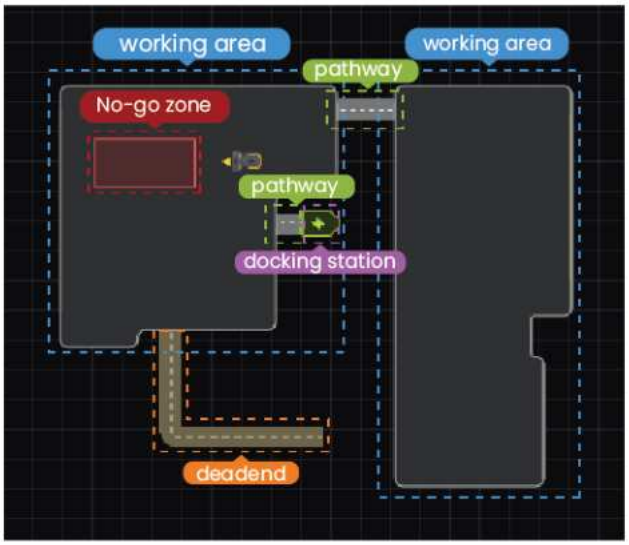

3.Yarbo App

① **Docking Station**: The docking station for Yarbo serves a dual purpose: it acts as the charging station, indicated by a green battery symbol on the map, and it also serves as the designated starting point for the execution of the work plan. In the event that the docking station needs to be relocated, it is imperative that the new position should be updated on the map by clicking to reinstall the docking station.

② **Pathway**: A pathway is designed to be a narrow lane that connects the two elements. A pathway can connect the docking station and the working area. At the same time, it can also connect two working areas as shown in the map.

③ **Working Area**: The working area refers to the specific zone where you intend Yarbo to perform snow blowing operations. This area must be fully enclosed and cannot exist independently without a pathway connecting it to the docking station. As a user, you don't need to specify the route for Yarbo when it is in operation. The only step required is to mark the boundary of the working area by driving the Yarbo along the perimeter.

④ **No-go Zone**: The "No-go zone" refers to enclosed areas within the working area where you do not want Yarbo to enter. Typically, these areas include the swimming pool, flowerbeds, restricted areas, and large obstacles that may obstruct Yarbo's normal operation. Although Yarbo M1 can detect and avoid obstacles, drawing the no-go zone in advance can save time during operating.

⑤ **Deadend**: A deadend refers to a narrow path that is as wide as the Yarbo itself. One end of the deadend should be connected to the working area or pathway, one end of the deadend cam remain unconnected. When the Yarbo process a deadend, it proceeds straight in and straight out.

2.Work Plan

The Work Plan feature is designed to help users create mowing tasks. Each work plan can be customized by choosing one or more elements on the map. In other words, users can create different work plans that include different elements on the same map. The purpose of creating different work plans is to ensure that different elements can have different working schedules.

3.Schedule

The Schedule feature empowers users to establish precise working time slots and work frequencies for the created work plan. Each schedule can only be linked with one work plan at a time, ensuring clarity and efficiency in task management. By utilizing schedules, users can enjoy 100% activities in alignment with their specific requirements.



4.Physical Controller Instruction

Physical controller is an alternative method for controlling Yarbo. This section aims to provide basic instructions for operating the Yarbo using the physical controller.

4.1 Connecting Yarbo Controller

4.1.2 Connecting physical controller to Yarbo

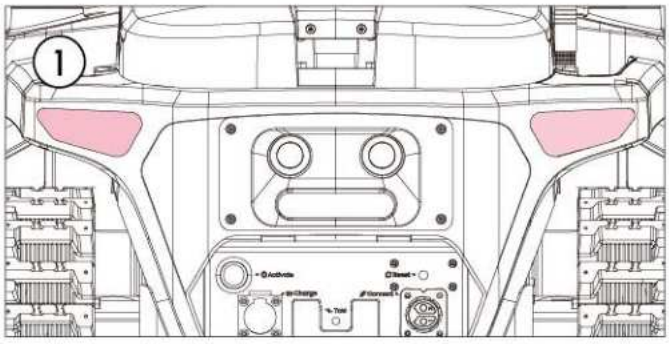

Before proceeding, ensure that Yarbo is powered on. A solid white light on the Yarbo (shown on following figure) indicates that Yarbo is powered on and ready for the controller setup.



Make sure the slide switch is slid to the right side.



Short press the Yarbo Logo Button to power on the physical controller.



Observe the LED light on the top of Yarbo Controller. If the yellow light is on steadily, it indicates that the physical controller has been successfully connected.



To gain the authority of physical controller, **hold** the Switch button for 2-3s to gain the authority.
Once Yarbo gains authority, you can control the yarbo now.

4.1.3 Connecting physical controller to mobile phone

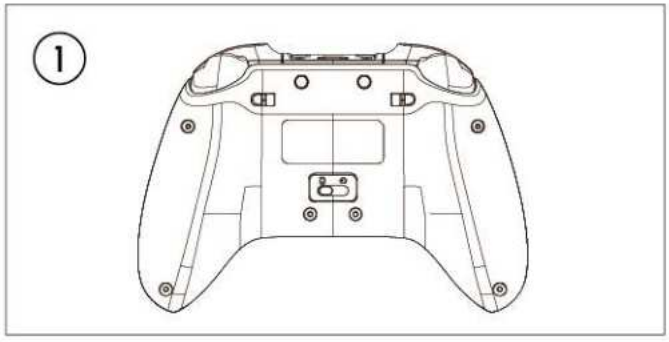

Make sure that the slide switch is slid to the left side.



Press for one second to pair the controller with the phone if the controller is on. **Press** and **hold** for about 5 seconds to start and pair the controller with the phone if the controller is off.



Open the phone setting page and turn on Bluetooth. **Click** the '**APP Controller**' to pair the Yarbo physical controller.



Observe the LED light on the top of Yarbo Controller. If the left yellow light is on steadily, it indicates that connected with the phone.

4.2 Yarbo Controller Holder Installation Guide

We offer an additional controller holder for our users, allowing them to conveniently place their mobile phones on the holder to see the camera view on-time.

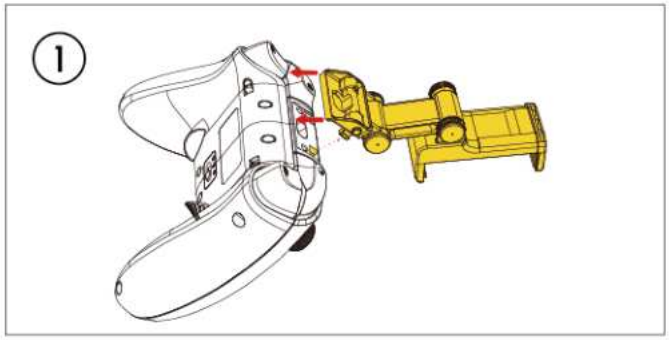

Locate the Physical Controller Holder provided in the Yarbo Core package and **locate** the side button on the Holder.

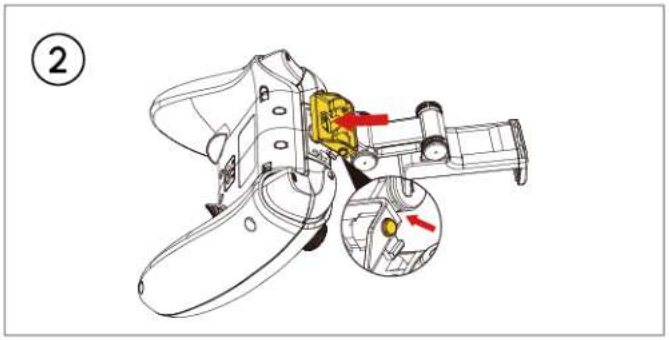

Locate the shafts and holes and **press** the buttons on both sides of the Holder, and then **press** the middle part as shown in the picture.

⚠ WARNING

- Never place the controller in the reach of children.
- Never allow unauthorized nor untrained persons to use the controller.

⚠ CAUTION

- DO NOT expose the controller to freezing temperatures for an extended duration.
- DO NOT spill water or snow on the surface of the controller. If any water or snow comes into contact with the controller, wipe it immediately.

⚠ NOTICE

- Please note that any damage or malfunction caused by or misuse of the controller will not be covered by the warranty.

Yarbo Logo Button:

This button power on the controller. To power on the controller, press and hold the **Logo button for 1-2 seconds**. For powering off, long press the **logo buttons for 3 seconds**.

Battery Level

Press the Battery Indicator Button (refer to the picture on the next page) to check the battery level of the controller. The four LED lights on the top of the controller indicate the battery status.

Light 1 stays on indicates battery level is 1%-25%.
Lights 1 and 2 stay on indicates battery level is 26%-50%.
Lights 1, 2, and 3 stay on indicates battery level is 51%-75%.
All lights (1, 2, 3, and 4) stay on indicates handle battery level is 76%-100%

4.Physical Controller Instruction

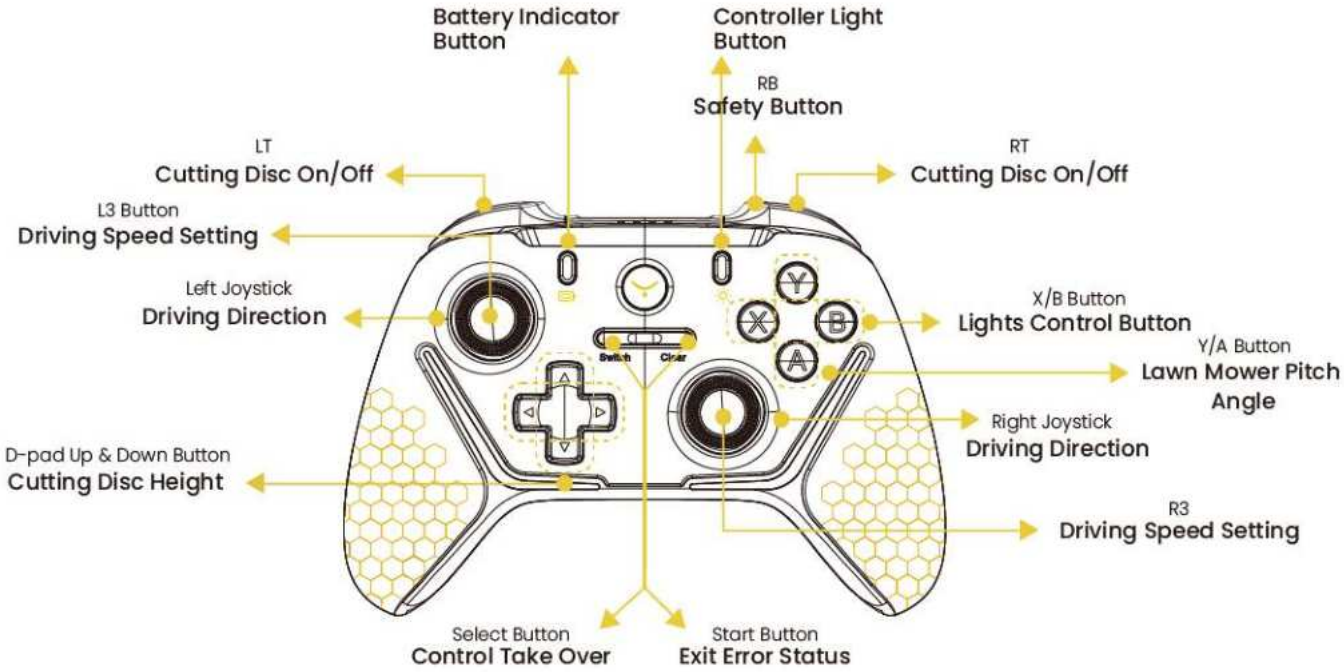

Button Introduction:

Yarbo Logo Button:

Logo button can be used to power on or off the controller. To power on the controller, short press the **Logo button for 1 second**. To power off, press the **Logo buttons for 3 seconds**. If the controller is not in use, it will automatically power off after 5 minutes.

Switch & Clear Button:

Long press the switch or clear button for seconds to take over the control authority. Once the physical controller gains authority, the users can operate the lawn mower.

Short press the switch or clear button to exit the error mode. When Yarbo encounters the dangers or stuck by any obstacles, it will stop and enters the error mode. After the dangers are cleared, pressed the start or clear button to exit the erorr mode.

RB (Safety button):

RB are designed as safety button, which means that one of the buttons shoule be pressed throughout most of the operation that may cause dangerous result. Except for the X/A/B/Y buttons and D-pads, the rest of the function buttons must be pressed with the safety button to execute their own functions.

Left Joystick and Right Joystick:

These two joysticks control the direction of movement and speed of the robot. Press the safety button (RB) and rotate the stick around to control Yarbo's movement in any direction. Press the left and right stick vertically down to switch between two-speed settings (L3, R3 button).

LT + RT button:

Keep the safety button pressed (RB) and long press the LT+RT buttons 2 to 3 seconds to open the cutting disc.

⚠ WARNING

- Always ensure that the surrounding environment is safe for cuttiing disc operations. Make sure you are at least 17 feet away from Yarbo before you turn on the cutting disc.

4.Physical Controller Instruction

⚠ WARNING

- To toggle the auger speed, the auger must be turned on first, which means that this button is not functioning when the auger is not in operation.

Directional Pad (D-pad):

Press the **up and down** button to control the cutting dics height.

Y Button:

This button controls the lawn mower module to pitch up. Press and hold the button to continuously pitch up the lawn mower module until it reaches the highest position. Release the button to stop at the current angle.

A Button:

This button controls the lawn mower module to pitch down.Press and hold the button to continuously pitch down the Lawn Mower Module until it reaches the lowest position. Release the button to stop at the current angle.

B Button:

Press this button to turn on and off the front lights (default setting is on).

X Button:

Press this button to turn on and off all the lights(default setting is on)

4.3 LED Indicator Description

Yarbo connecting mode

LED Indicator	Description
Two lights steady on	Controller and the Yarbo are connected successfully
Two lights flash slowly	Controller is connecting to the Yarbo
Two lights flash rapidly	Initiate the pairing of the Controller with the Yarbo

Phone connecting mode

LED Indicator	Description
One light steady on	App and Controller are connected successfully
One light flash slowly	The Controller is connecting to the App
One light	Initiating the pairing of the controller with the App

Additional Notes

Four lights flash during the charging process till fully charged.
Two flash lights indicate the battery level is low during use.

5.Charging

5.1 Charging Yarbo With Wired Charger

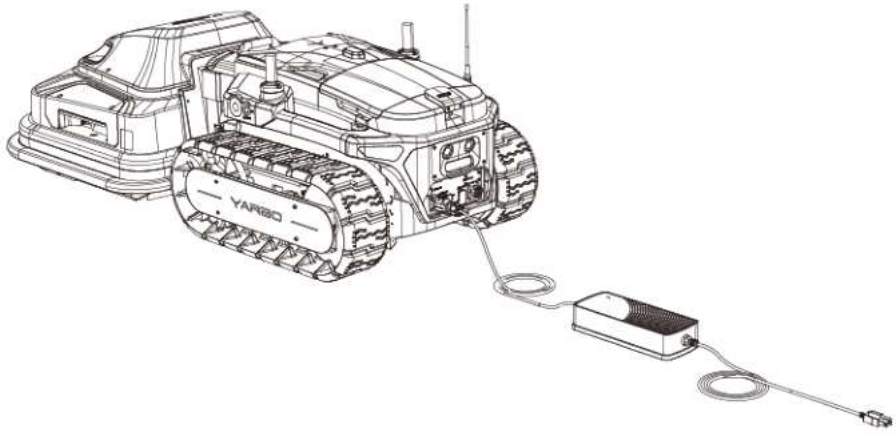

- To begin charging Yarbo, plug the wired charger into an electrical outlet, and then connect it to the charging port located at the rear of Yarbo.

⚠ WARNING

- Inspect the charging cable for any signs of damage or fraying. A damaged cable should be replaced to ensure safe and efficient charging. Also, please ensure that the connectors are clean and free from debris or dirt, as this can affect the charging process.
- When connecting the charger to Yarbo, please ensure a secure and snug connection. A loose connection may result in slow or interrupted charging. Double-check that the charger is firmly plugged into both Yarbo and the power source.
- Please ensure that the wired charger you are using is compatible with Yarbo. Check the charger's specifications and ensure it provides the appropriate voltage and current for charging Yarbo. Wrong voltage setting will damage the wired charger and Yarbo's battery pack, may lead to fire and explosion.

5.2 Charging Yarbo with Docking Station

Autonomous Recharge

- Before using autonomous recharge, you need to:

  ① Make sure you have already set up a map for Yarbo.
  ② Yarbo is located within your area.
  ③ Make sure the RTK Signal is strong.

- Normally, Yarbo will automatically return to charge when it detects low battery level (<20%). You can also manually send Yarbo to the docking station to recharge by:

  Tapping the "Recharge" button on the Yarbo app's virtual controller page
  Or
  Tapping the "Recharge" button on the Yarbo app's automonous plan page.

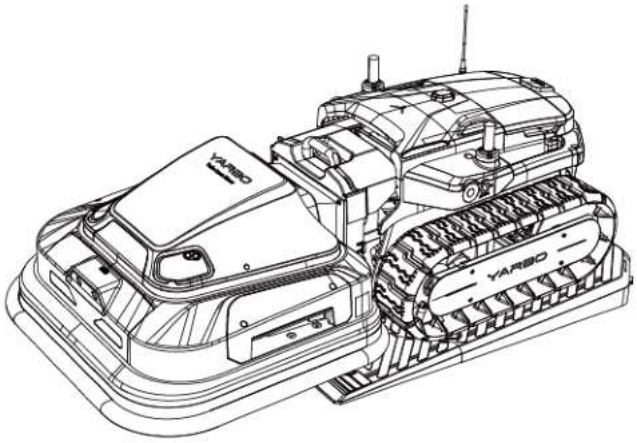

① Once the Yarbo is placed at the **center of the docking station**, automatic charging will commence without user intervention for 5 minutes.
② Click the **Charge** button on the APP home page if you want Yarbo initiate the charging process rightnow.

Manual Recharge

- Use the physical/virtual controller, manually drive Yarbo onto the docking station. Ensure that the Yarbo is positioned directly at the center of the docking station and parked in the correct orientation.

Maintenance Video

6.Maintenace Guide

6.1 Before Conducting Any Maintenance

⚠ WARNING

- Please ensure that you do not wear open-toed shoes or go barefoot when performing the following maintenance tasks.
- Always use appropriate Personal Protective Equipment (PPE). Wear protective gloves and goggles whenever performing maintenance tasks or when needed.
- Ensure that Yarbo is switched OFF and disconnects the battery when performing the following maintenance tasks.

Disconnecting Battery from Yarbo

① **Press** the Emergency Stop Button.
② **Confirm** that Yarbo is turned off by checking if all the lights are switched off. Unscrew the bolts on the side of the battery cover.
③ **Remove** the battery cover and unplug the cable connecting Yarbo and battery pack.
④ **Remove** the battery pack and safely secure it.

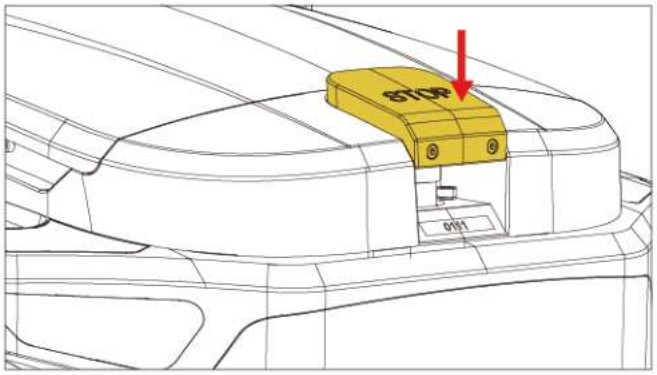

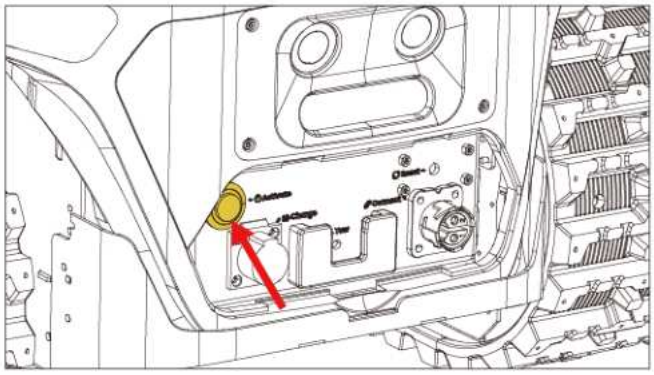

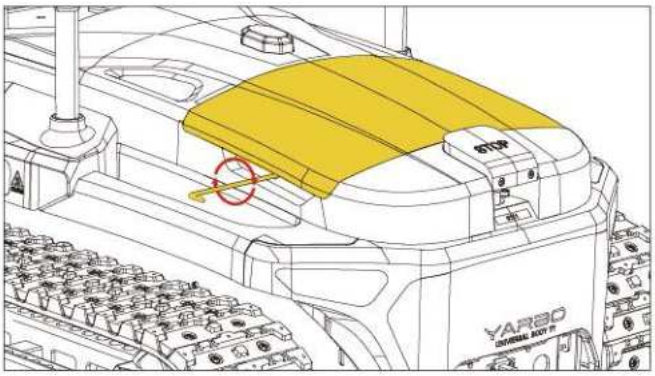

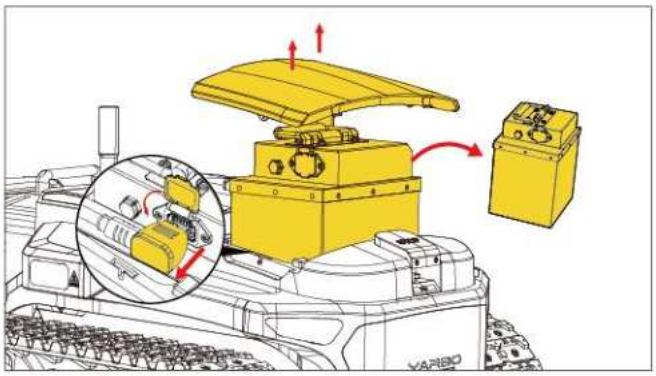

6.2 Cleaning Yarbo Core

Please avoid using solvents or large amount of liquid on plastic components, as commercial solvents can potentially harm the appearance and integrity of your Yarbo. Instead, use a clean and gentle cloth or a brush to remove debris, mud, and other particles. Please avoid using the high-pressure water hose or any high pressure cleaning methods to clean the yarbo core.

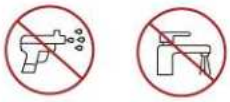

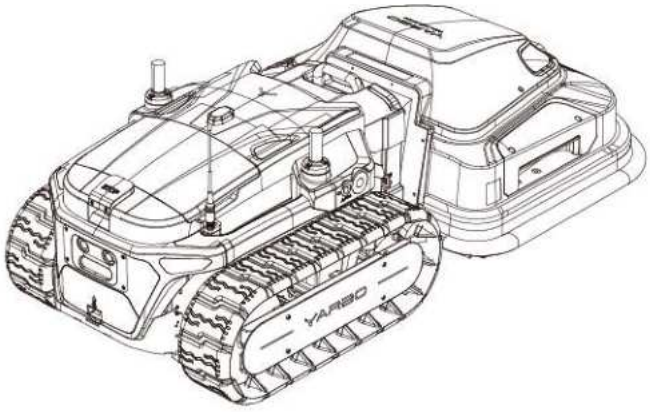

⚠ WARNING

- This statement advises that if a camera used for obstacle avoidance is covered, dirty, or unclear, it may lead to confusion about the visual algorithms that rely on these cameras. It suggests cleaning the cameras with a soft cloth to ensure they are clear and functioning properly.
- Ensure that the power socket does not come into contact with anything wet.

6.3 Installing Tow Hitch

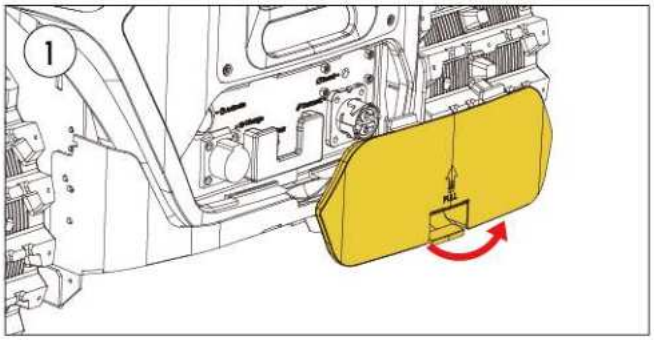

Remove the rear cover.

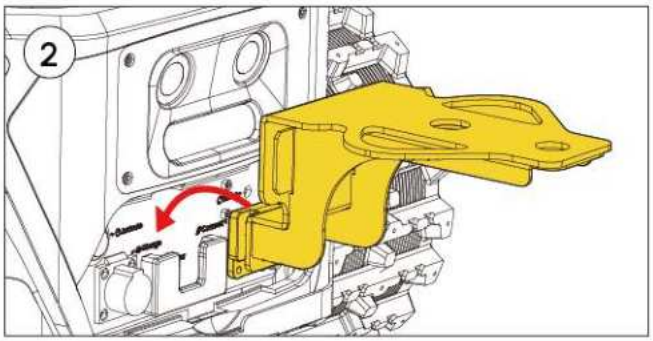

Locate the tow hitch provided in the package. **Align** the connection part of the tow hitch to the mount.

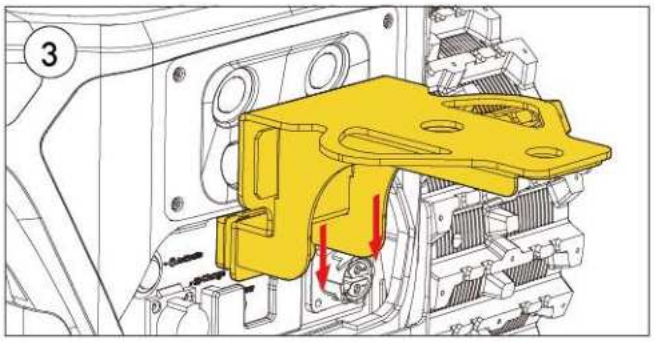

Slide the tow hitch down to the bottom of the mount.

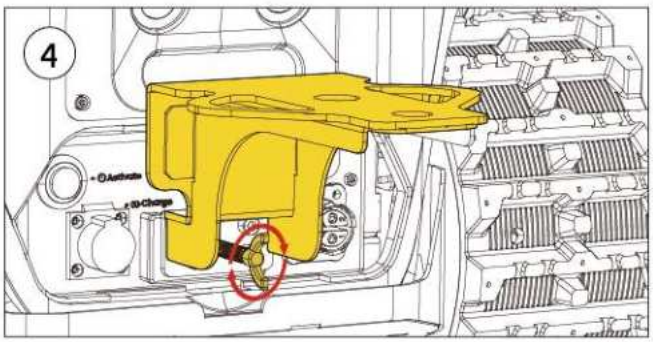

Locate the tow hitch screw provided in the package and **tighten** the tow hitch by screwing the bolt. Ensure that the bolt is securely fastened to prevent any loosening while towing.

6.4 Replacing Cutting Blade

1. **Detach** the lawn mower module from Yarbo Core.
2. **Raise** the lawn mower module from the side and place it on the Vertical Stand for Module, please refer to the picture shown before.
3. **Unscrew the** Cutting Blades Bolts using Phillips-Head Screwdriver provided in the lawn mower module box Box content.
4. **Install** the new blades by tightening the cutting blade bolts.

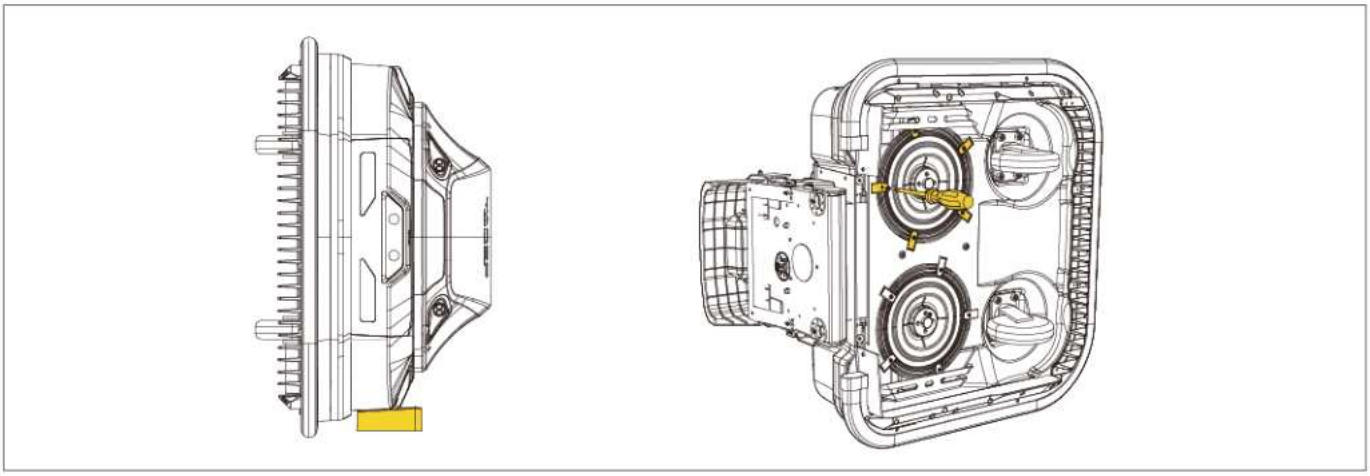

NOTICE

- It is recommended to replace all cutting blades simultaneously if the mowing results are not as satisfactory as before.
- The blades are advised to be replaced every three months. However, in the case of thick grass or more frequent use, blade replacements may be needed more often.

WARNING

- Stabilize the blade disc when fastening the cutting blade bolts.
- Ensure the safety of individuals by taking necessary precautions, such as wearing gloves, while performing this procedure.

6.5 Applying Grease on the Tracks

It is crucial to apply grease regularly on the tracks to maintain smooth rotation of the drive wheel and road wheels. This is especially important during the machine's first year of use. Over time, grease may degrade and diminish, making regular refills essential. We advise applying grease every two weeks throughout the snow season. While various grease types are suitable, we recommend opting for high-vacuum grease for optimal performance. Below are the situations when immediate application of grease is needed.

- **Motion Hampered**: When you sense that your Yarbo has not been greased for a while and its motion might be hampered due to this.
- **Noisy Operation**: Unusual noise coming from the tracks indicates possible friction or wear. Applying grease can help reduce this noise by lubricating the moving parts and reducing friction.
- **Track Disengagement**: If you notice the track becoming detached from the main body during inspection, it could be due to inadequate lubrication. Greasing the tracks can help maintain a secure connection between the tracks and the main body of the machine.

⚠ NOTICE

- The presence of debris or mud on the rubber tracks can negatively impact Yarbo's driving performance. To maintain optimal performance, make sure to clean debris and mud from the rubber tracks on a regular basis.

6.6 Updating Firmware

Ensuring optimal performance of Yarbo at the hardware level is crucial, but it's equally vital to maintain the firmware up-to-date. Regular firmware updates notification will be made available through the Yarbo App. We highly recommend utilizing the built-in Over-The-Air (OTA) technology within the Yarbo App to update the firmware as soon as new versions are released. These updates consistently enhance the capabilities of the product.

Before proceeding to update firmware, please ensure that thefollowing conditions are met:

① Intalling Anti-slip StudsThe battery level is at least 30%.
② Yarbo is connected to the internet.
③ No working schedules are active within the next hour to prevent interruptions during the update process.

6.7 Keeping Battery at its Best Performance

Extended periods of inactivity can significantly diminish the performance of the battery pack. To minimize this degradation, it's important not to leave the battery pack inactive for more than three months. Lithium-ion battery packs experience slight self-discharge over time. Charging the battery pack for at least 15 minutes once every three months will suffice to maintain its activity level.

NOTICE

- The battery pack lifespan is influenced by operation frequency and total working hours. If the operating time per full charge noticeably decreases, it might be the time to consider replacing the battery pack.

7.Specification

7.1 Yarbo Core

Item	Value
Dimensions, length*width*height	27*22*20in/675*566*512mm
Weight, without battery pack	123.5lbs/56kg
Weight, with battery pack	145.5lbs/66kg
Operational Temperature	-13°F to 113°F/-25°C to 45°C
Towing Ability	GTW up to 3500lbs/1600kg
Module Pitching Angle	0° to 18°
Internet Access Technology	WI-FI, WI-FI-HaLow, 4G
Navigation Technology	RTK-GPS, Computer Vision, Sensors
Charging Technology	Wired, Wireless
Obstacle Avoidance Technology	Computer Vision by cameras

7.2 Yarbo Lawn mower Module

Item	Value
Dimensions, length*width*height	27*29*16in/691*745*406mm
Weight	30.9kg
Operational Temperature	-13°F to 113°F / -25°C to 45°C
Number of Mowing Disc	2
Number of Mowing Blade(Each Disc)	5
Noise level/db	60db
Threshold capability/cm	5cm
Maximum Climbing Capability, Slope Degree	35°
Mowing coverage / ㎡	25000 ㎡ (twice a week)
Cutting Width	20in / 50cm
Cutting Height	1.2-4 in / 30-102mm

7.3 Yarbo Docking Station

Item	Value
Dimensions, length*width*height	25*36*3in/640*910*76mm
IP Rating	IP67
Operational Temperature	-13°F to 113°F/-25°C to 45°C
Charging Technology	Wireless Charging through embedded coils No exposed contacts. Fully autonomous
Charging Voltage	42V
Installation Requirement	Level surface

7.4 Yarbo Battery

Item	Value
Dimensions, length*width*height	7*6*10in / 178*152*248mm
Weight, without battery pack	22.5lbs / 10kg
Nominal Voltage	36V
Nominal Capacity	38.4Ah
Operational Temperature	-13°F to 113°F / -25°C to 45°C
Battery Management System (BMS)	Over-heating, short circuit, over-current and over-charge protection
Charging Time (0 to 100% SOC, wireless charging using Yarbo Docking Station)	About 3 hours
Charging Time (30% to 80% SOC, wireless charging using Yarbo Docking Station)	About 1 hour and 15 minutes
Charging Time (0 to 100% SOC, using Wired Charger)using Wired Charger)	About 5 hours
Charging Time (30% to 80% SOC, using Wired Charger)	About 2 hours and 20 minutes
Battery Chemistry	NCM Li-ion

8.Limited Warranty

8.1 Residential Warranty Coverage

Lawn Mower Module

Item	Parts	Warranty Period
Motor system	Cutting Height Adjusting Motor	2 Years
	Cutting Motor	
Vision System	Camera	2 Years
	Rain Sensor	
	Ultrasonic Radar	
Consumables	Shell	1 Year
	Cutting Disc	No Warranty
	Cutting Blade	
	Caster Wheel	

Core

Item	Parts	Warranty Period
Motor system	Linear Actuator	2 Years
	Driving Motor	
Power System	Lithium-ion Battery	2 Years
	Power Adapter	
	Docking Station	
Electric Control System	RTK System	2 Years
	Motherboard	
Vision System	Camera	2 Years
Consumables	Shell	1 Year
	Tracks	No Warranty

8. Limited Warranty

8.2 General Statement

1. Yarbo Inc. shall not be liable for compensation if it can prove one of the following circumstances:

① The product has not been put into circulation;
② When the product is put into circulation, the defect causing damage does not yet exist;
③ When the product is put into circulation, the scientific and technological level cannot yet detect the existence of defects.

2. The warranty service is valid from the date of product delivery. When requesting after-sales service, our authorized service dealer may require the original invoice or receipt containing relevant information. In the absence of proof of purchase, the warranty period will commence based on the product's manufacturing date.
3. This warranty applies exclusively to original purchasers. Replacements do not initiate a new warranty; the original warranty remains valid from the initial delivery date. It's important to note that you may be responsible for covering the delivery costs associated with return, repair, or replacement of the product.
4. Yarbo will perform a diagnostic assessment on the returned product. If the defective product aligns with our limited warranty policy, Yarbo will cover the cost of repair or replacement. However, you may be responsible for the associated delivery charges.
5. Yarbo assumes no liability for any direct or indirect consequences arising from any cause, including but not limited to loss of use or loss of profits.
6. Please be mindful that any damage resulting from inappropriate packaging, other than the standard Yarbo packaging, is the sole responsibility of the customer. If you no longer have the original packaging, you must obtain suitable packaging or consult Yarbo's technicians for proper packaging guidance.

Repair and Warranty Services:

We have established a global after-sales service team, supported by local service partners, to ensure prompt and efficient service for all our users worldwide. Our comprehensive support includes a dedicated call center and local repair centers in key markets.

To request a repair service, please send your request to **support@yarbo.com** or contact us at **+1(888)-550-6809.**

If your product is still within the free warranty period and meets the criteria for a warranty repair, the service will be provided at no charge. If your product does not qualify for free warranty repair, standard repair fees may apply.

8. Limited Warranty

8.3 Warranty Forfeiture

The warranty may be forfeited under the following circumstances:

1. Failure to adhere to the operating or maintenance guidelines outlined in the User Manual.
2. Neglecting to perform the prescribed battery and product maintenance procedures.
3. Modification or repair conducted by an unauthorized service provider.
4. Damages resulting from forced operation with aged or deteriorated components.
5. Damages or product malfunctions arising from the misuse of unauthorized components or accessories.
6. Damages caused by non-defective factors, including but not limited to crashes or collisions. Additionally, damages caused by manually operating the product with a low-charged or defective battery, or tampering with the seals and labels on the product.
7. Components subject to normal wear and tear, such as the auger, rubber track, belt, or other parts subjected to typical usage, are not covered by warranty. For the purchase of these items, refer to our website at www.yarbo.com/pages/contact-us or connect with an authorized service dealer.
8. Warranty coverage does not extend to products used for commercial purposes. Commercial use includes instances where the product is employed in institutions, rented out, or utilized at multiple locations.

YARBO INC.

www.yarbo.com

For Privacy Policy, please visit:
https://www.yarbo.com/legal/privacy-policy
Please note, the User Manual may be updated based on the changes in production, product specification, included contents and so on.
For the latest version of the User Manual, please visit:
https://www.yarbo.com/support

Refer to Friends & Get Rewards

Share Your Yarbo Journey

Join Yarbo Exclusive Community

+1 (888)550-6809

support@yarbo.com

1951 Ocean Avenue, Unit 3, Ronkonkoma, NY 11779 United States

V 1.6