YARBO

2024

USER MANUAL

YARBO CORE

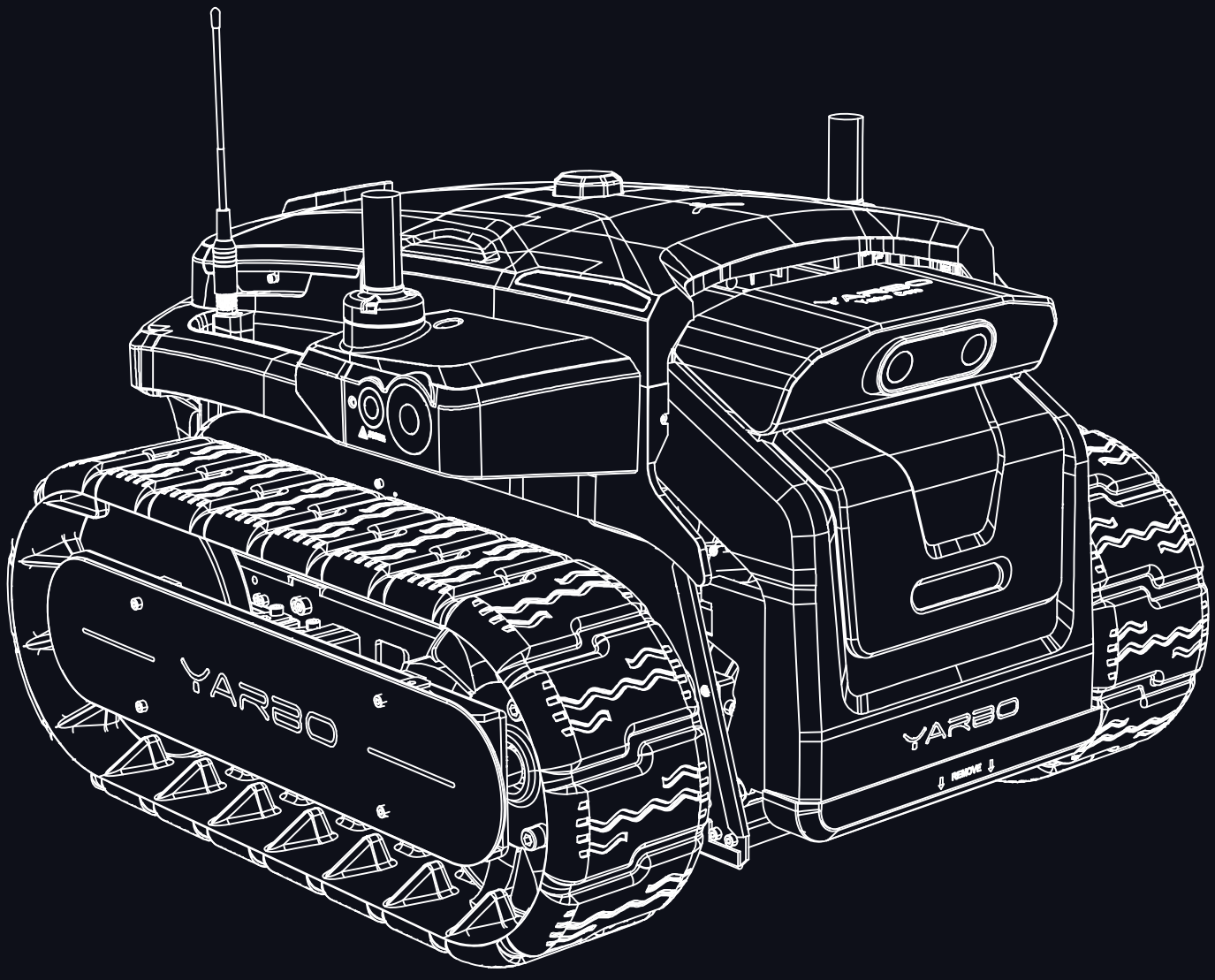

User Manual

Video Assembly Gui

YARBO

Table of Contents

Welcome

Yarbo Core Box Content

1.1 Yarbo Core Content 01
1.2 Smart Assist Module Box Content 02

Installation Guide

2.1 Yarbo Core Installation Guide 03
2.2 Installing Yarbo App 07
2.3 Installing the Data Center 08
2.4 Installing the Docking Station 22

Charging

3.1 Charging Yarbo M1 With Wired Charger 23
3.2 Charging Yarbo M1 with Docking Station 24

Features Introduction

4.1 Remote Control 25
4.2 Intelligent Carrying 27
4.3 Auto Patrol 28
4.4 Follow Me 29

Maintenance Guide

5.1 Before Conducting Any Maintenance 30
5.2 Cleaning Yarbo Core 31
5.3 Installing Tow Hitch 32
5.4 Applicating Grease on the Tracks 33
5.5 Updating Firmware 34
5.6 Keeping Battery at its Best Performance 34

Specification

Yarbo Core 35

Limited Warranty

Residential Warrant Coverage 36

Welcome



Welcome

Thank you for purchasing Yarbo Core. We are more than happy to welcome you to our user community. We understand your anticipation for this long-awaited yard robot to free yourself and your family members from the annoying cleaning routine. Before you start using our product, we kindly ask you to thoroughly read this user manual, especially the sections on how to use Yarbo safely and identify potential hazards.

1.Yarbo Core Box Content

1.1 Yarbo Core Content

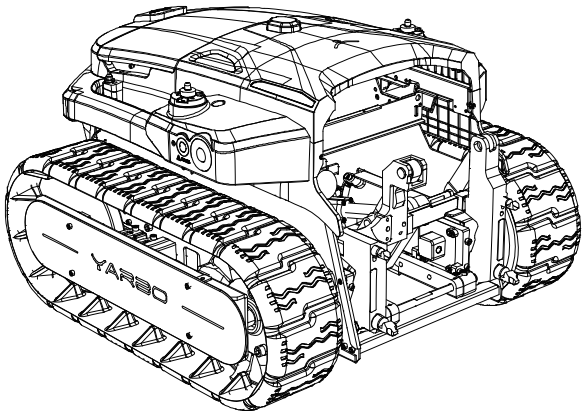

Yarbo Core



Data Center

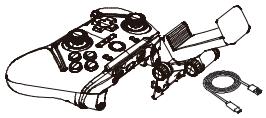

Physical Controller & Controller Holder & Controller Power Adapter

1.2 Smart Assist Module Box Content

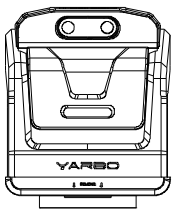

Smart Assist Module



POE Power Adapter



2 meter Ethernet Cable



30 meter Ethernet Cable



x2

High RTK Antenna Mount

1.Yarbo Core Box Content


Allen Key #1


Allen Key #2


Allen Key #3


Allen Key #4

Grass Pegs Screwdriver Head


x3
Grass Pegs for Mount


Battery Cover Wrench


x2
Anti-theft Screws for Battery Cover


L-Shaped Socket Wrench for Track


x20
Data Center Cable Clip


x3
Wood Nails for Mount


Screwdriver Head for Wood Nails



Spare Screws


x3
Expansion Bolts for Mount


x7
Connection Bolts for Pole


x1
T-joint of Data Center


x1
T-joint Cap


Track Wrench


Extension Pole of Data Center


Standard Pole of Data Center


Data Center Mount


x2
Tow Hitch Screws


RTK Antenna for Data Center


Tow Hitch (Optional)


x6
Low RTK Antenna Mount Bolts


x4
Low RTK Antenna Mount Connection Bolts


x2
Low RTK Antenna Mount


Screwdriver for Low RTK Antenna Moun Connection Bolts


x2
Simple Wrench


x6
High RTK Antenna Mount Bolts

Bluetooth Antenna for Data Center


HaLow Antenna for Rover

HaLow Antenna for Data Center



x2
Track Side Plate

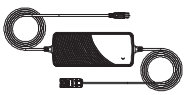
Wire charger


HaLow Antenna Clip for Data Center

Clevis Pin


Clip bushing

R-clip

2.Installation Guide

2.1 Yarbo Core Installation Guide

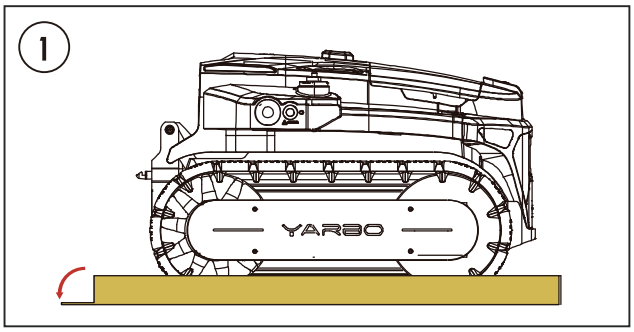

Cut the box along the cutting line on the bottom of the packaging box.

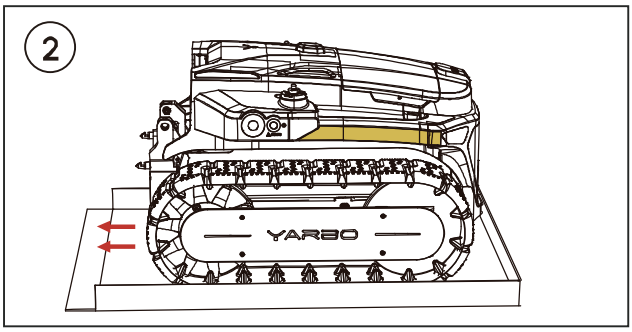

Grasp the lifting handles of the Yarbo Core and **push** the Yarbo Core out from the packaging box.

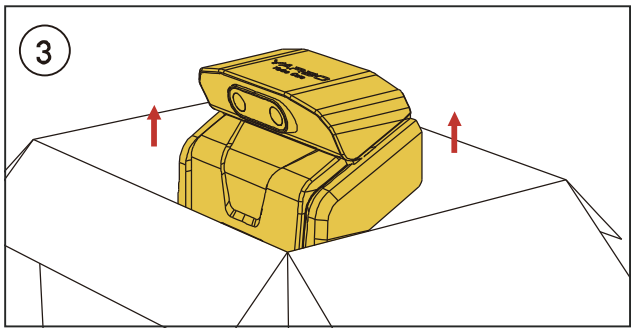

Take the Smart Assist Module out of the box.

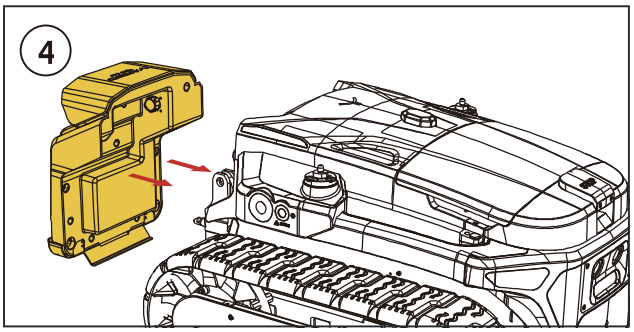

Close the Smart Assist Module to your Yarbo Core.

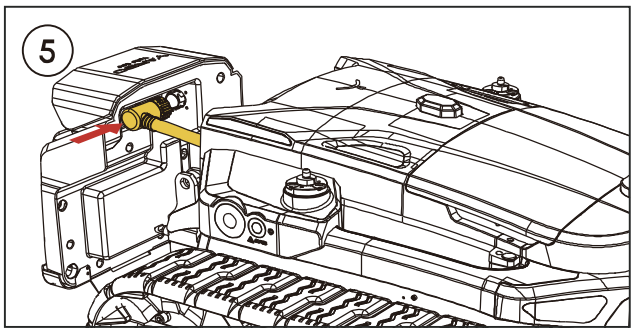

Gently connect the cable from the Smart Assist Module to Yarbo Core and tighten the blue connector.

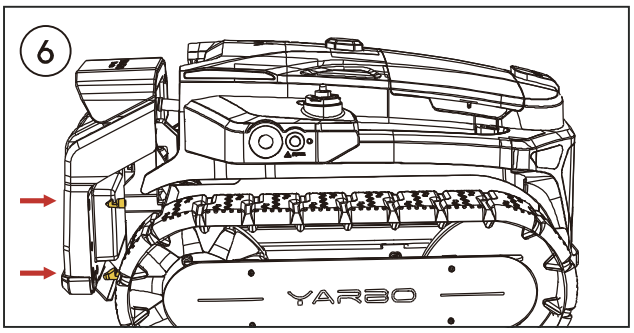

Locate the shafts and holes in the Yarbo Core and Smart Assist Module.Slightly push the Module towards the Yarbo Core after the proper alignment until sounding a click.

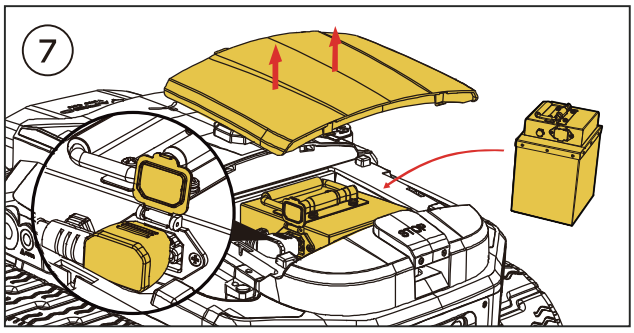

Remove the cover by grasping both sides with your hands and place the battery inside.
Connect the cable from the Yarbo Core to the battery.

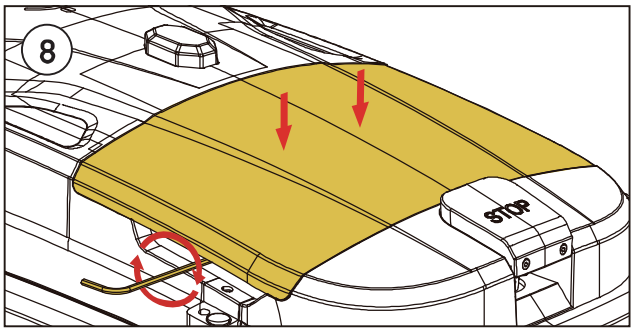

Place the cover back in place and Screw the Anti-theft Bolts on both sides using **Battery Cover Wrench** provided in the package.

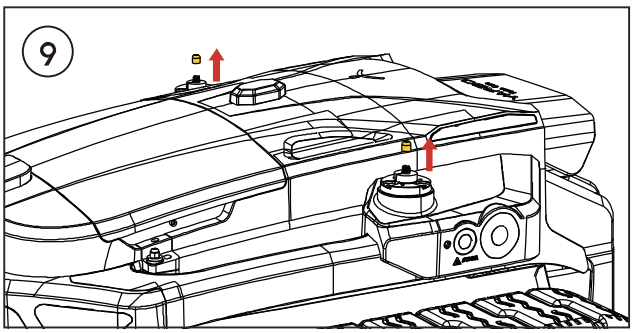

Locate the red screw caps on the RTK Antenna Mounts and **remove** them.

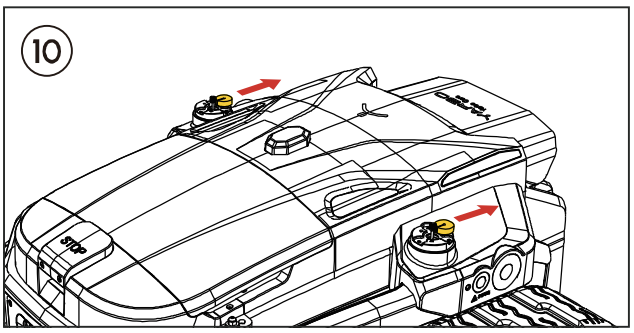

Remove the rubber rings on the RTK Antenna Mounts.

2. Installation Guide

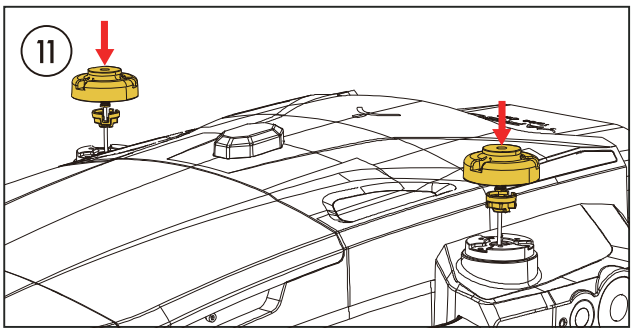

Locate the Low RTK Antenna Mounts provided in the package.

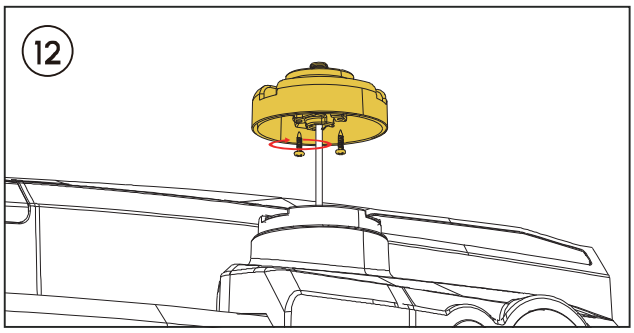

Locate the Low RTK Antenna Mount Connection Bolts and screw the bolts to fasten the connections on both sides.

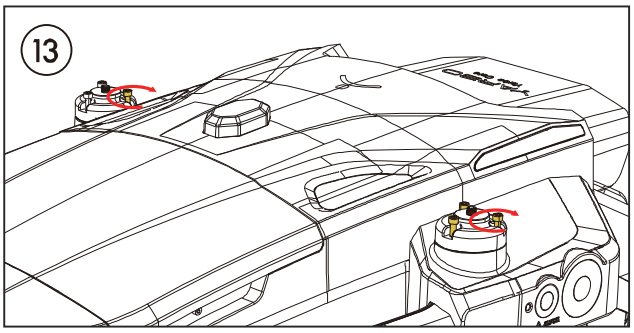

Screw the three connection bolts on both sides of the Yarbo Core by using Allen Key#2.

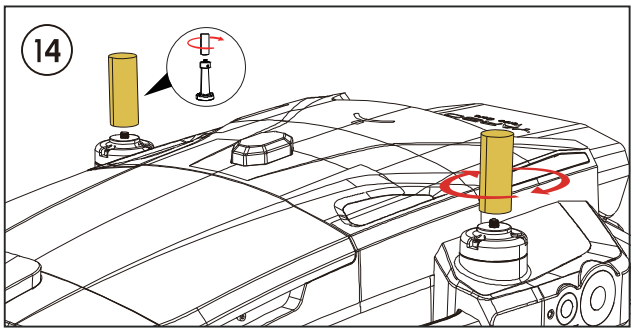

Locate the Low RTK Antennas and screw them on the RTK Antenna Mounts.

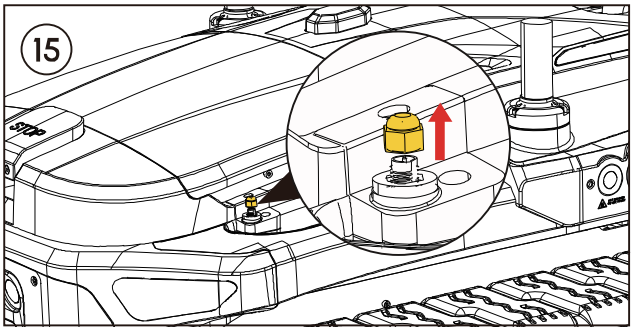

Remove the white screw cap on the HaLow Antenna Mount.

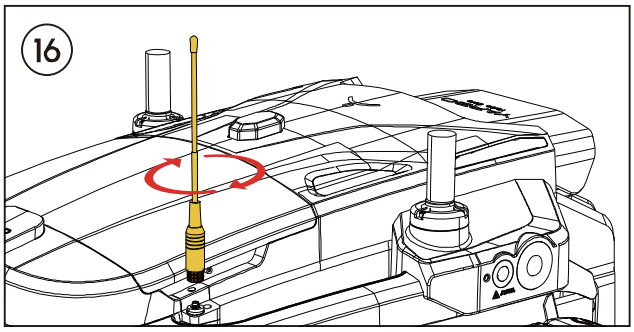

Locate the HaLow Antenna and slightly screw the antenna into the HaLow Antenna Mount.

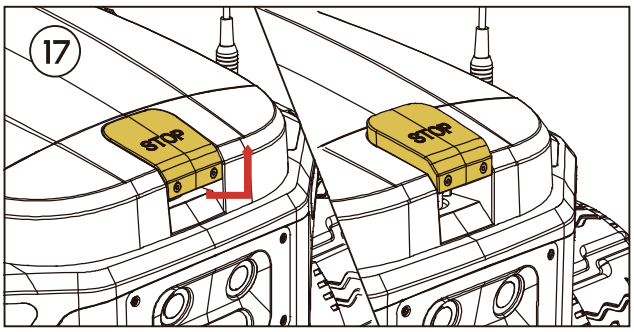

Lift the Emergency Stop Button.

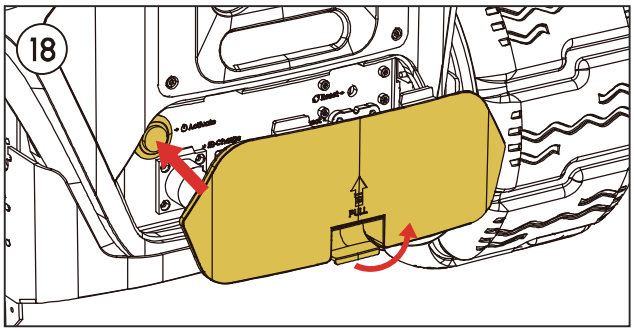

Remove the rear cover. **Press** the power button to turn on Yarbo. Place back the rear cover.

2.2 Installing Yarbo App

The Yarbo App is a professional application that empowers you to manage and control your Yarbo anytime, anywhere, elevating your snow cleaning experience to new heights. With its impressive features, you can easily set up work schedules, define multiple working areas and no-go zones, and monitor Yarbo's operating status. Additionally, you can receive the latest firmware updates and access instruction manuals, video tutorials, FAQs, and more through the App.

Follow these simple steps to install and set up the Yarbo App:

① Download the Yarbo App by scanning the QR code below or searching on the app store.
② After installation, log in to your Yarbo account. If you don't have one, please register.
③ Follow the steps of the first-time user guide on the app. If there are few steps that are hard to understand, please refer to the app section of this user manual.

*Note: Once a device is associated with a Yarbo account, it cannot be linked to a new account. However, you can invite others to use your Yarbo through Yarbo Sharing in the app.

iOS

Available on the App Store

Android

GET IT ON Google Play

2.3 Installing the Data Center

Method 1 Roof and Wall Installation(Recommended)

Make sure there's a clear view of the sky with at least 120 degree of unobstructed space. The reason we recommend this method is that the higher the Data Center is placed, the more stable RTK signal it will receive.

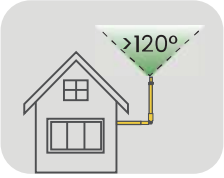

Method 2 Ground Installation

Make sure there's a clear view of the sky with at least 120 degree of unobstructed space.

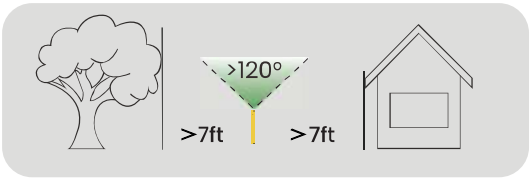

⚠ CAUTION

- Please read through all the following installation methods, and make sure you understand how to use required tools before installation.

⚠ NOTICE

- The most important aspect of installing the Data Center Set is to ensure that the antennas have a 120° unobstructed view of the sky. Please choose the most suitable method for your home. Additionally, the Data Center requires a wired network connection (A 30-metre-long Ethernet cable is provided), so it is necessary to find a location where the Data Center is not too far from the router in your house.

2.3.1 Installation Preparation

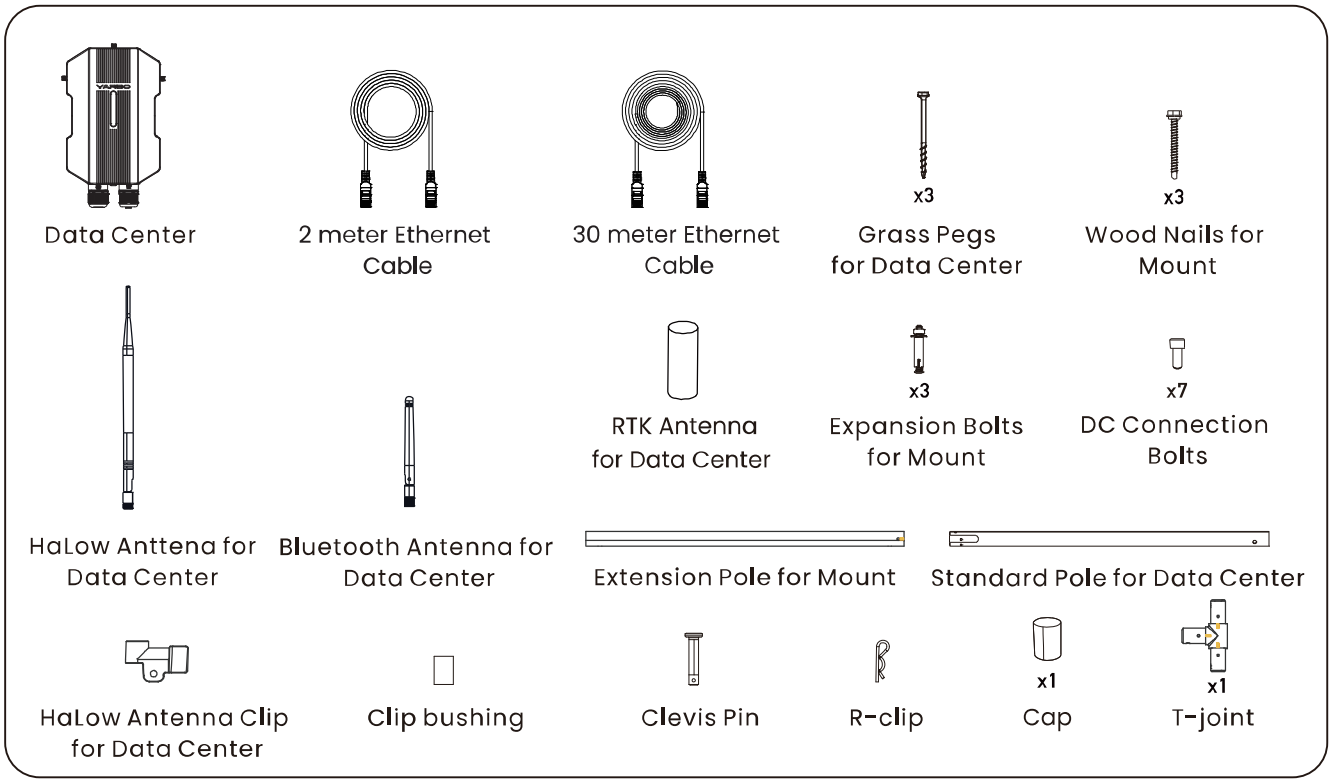

⚠ WARNING

- Given the recommendation to install the Data Center at the top of a house, it is crucial to implement comprehensive lightning protection measures to safeguard against potential damage caused by lightning strikes. In areas where lightning activity is frequent, the risk of such damage increases significantly. We strongly advise those residing in high-lightning-activity regions to buy a grounding cable. This critical component allows for the safe dissipation of excess electrical current into the earth, minimizing the risk of Data Center damage.

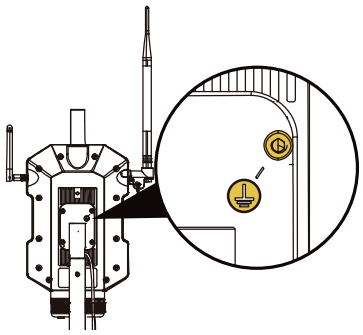

2.3.2 Data Center Installation

NOTICE

■ Please make sure that the place you choose for insatallation has a clear of the sky with at least 120 degree of unobstructed space.

Method 1 Roof and Wall Installation

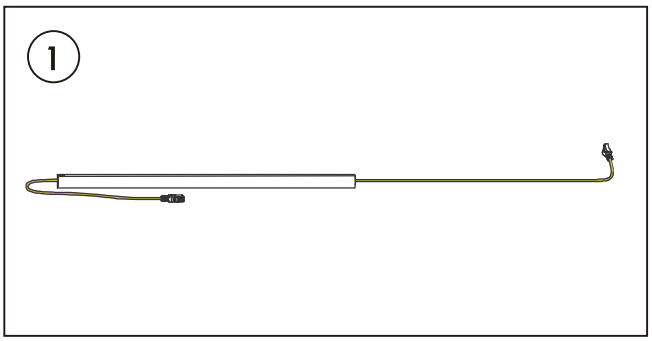

Locate the 30m Ethernet Cable and extension pole provided in the Yarbo Core box. **Thread** the Ethernet cable through the extension pole.

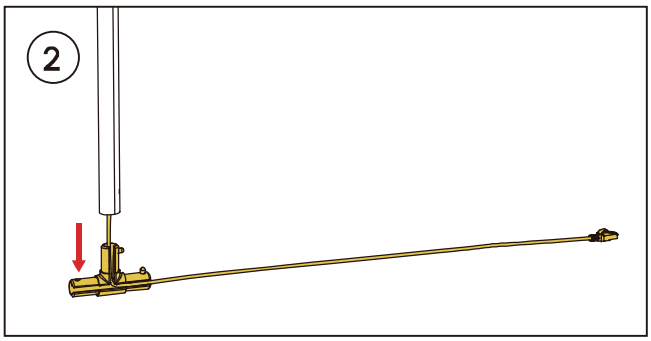

Press the cable into the crevice of a T-joint as shown in the picture. **Connect** the Extension Pole to the T-joint by pressing the round button on the T-joint and **align** this button with the hole in the Extension Pole.

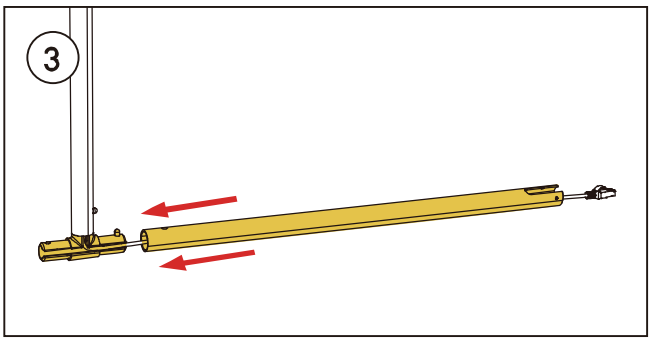

Press the round button on the T-joint and **align** it with the hole in the Standard Pole to connect two parts and secure the connection.

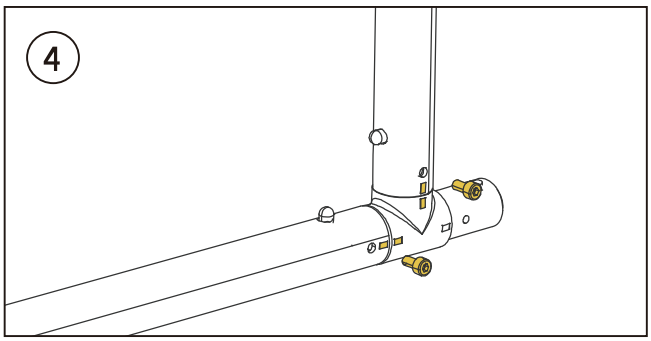

Screw in the two Connection Bolts for Pole to stabilize the T-joint, Standard Pole, and Extension Pole.

2.Installation Guide

5

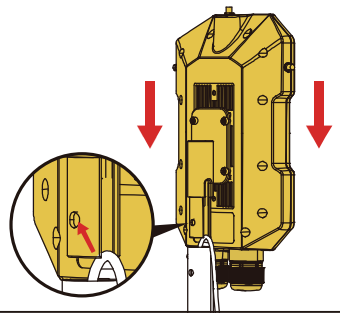

Connect the Data Center to the Extension pole (press the small button on the Data Center and align this button with the hole in the pole). **Pull out** a small section of the cable to ensure it can be reached and connected to the Ethernet POE WAN port.

6

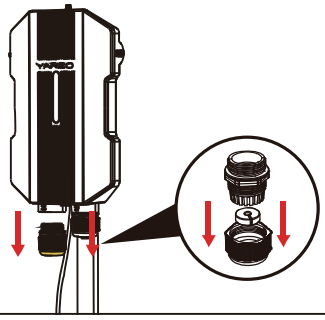

Carefully **unscrew** the entire gland set on the WAN port of the Data Center. **Remove** the gland cover and **push out** the black rubber plug.

7

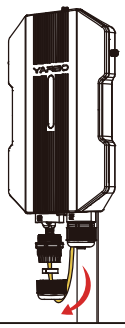

Thread the Ethernet Cable through the gland and its cover. **Locate** the opening of the black rubber plug and **snap** it onto the Ethernet Cable.

8

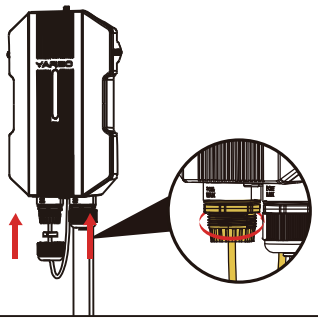

Connect the Ethernet Cable to the WAN port and **tighten** the gland by screwing it in.

9

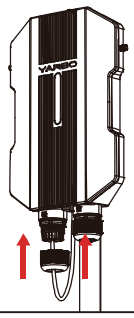

Push the black rubber plug into the gland.

10

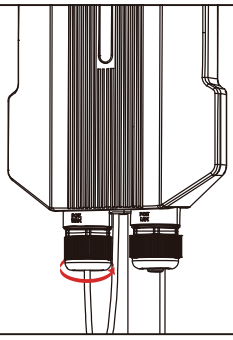

Screw and **tighten** the cover of the gland.

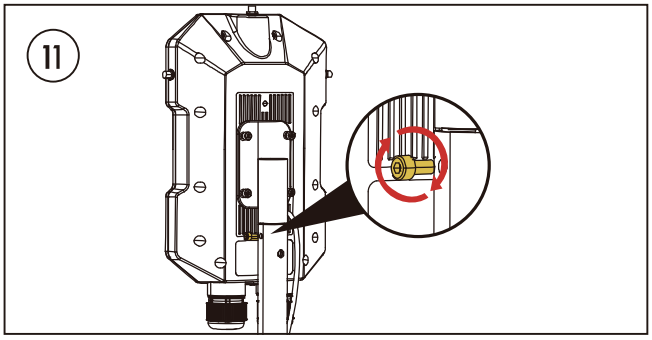

Screw one connection bolt to fasten the connection part between the Data Center and the Extension Pole.

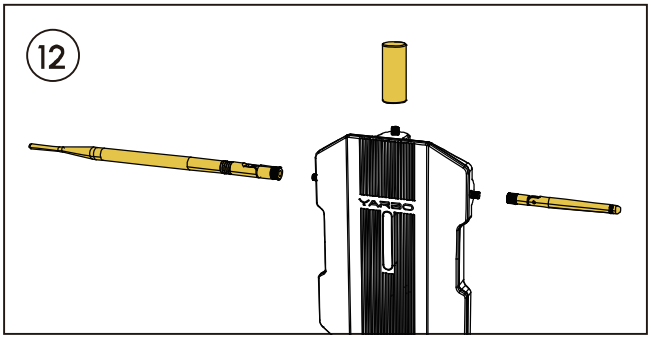

Locate the three antennas provided in the Yarbo Core box and securely **tighten** them.

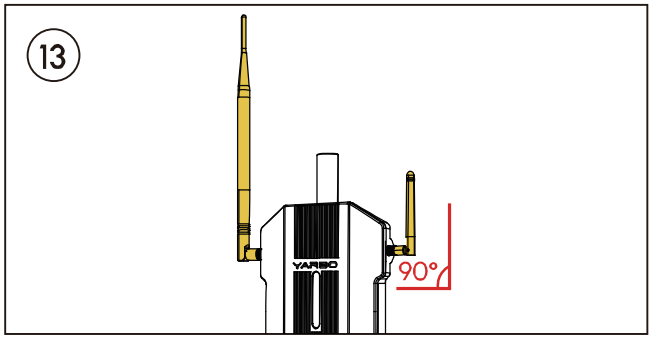

Fold the HaLow Antenna and Bluetooth Antenna at a 90-degree angle, directing them upwards towards the sky.

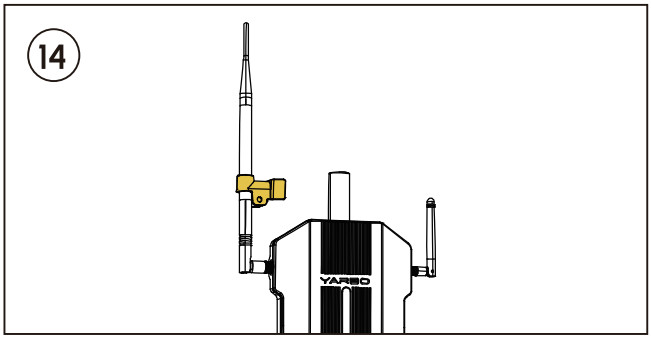

Locate the HaLow Antenna Clip through the HaLow Antenna.

NOTICE

- If it is impossible to drill through the wall or other hard material, the cable can be dragged out from the side of the mount.

2.Installation Guide

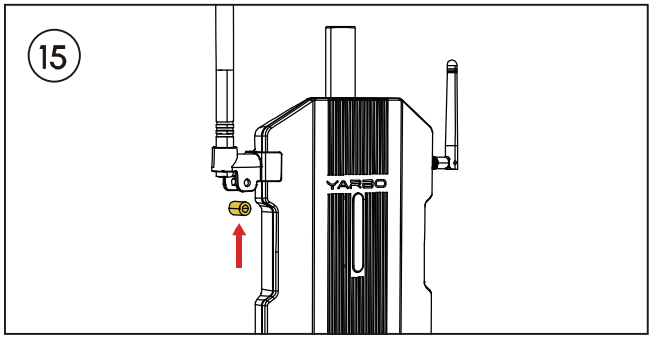

Move the HaLow Antenna Clips to the bottom of the Halow Antenna and **snap** the Data Center.Then put on the Clip bushing.

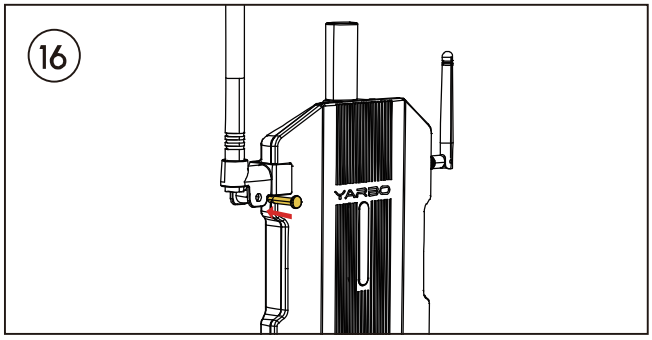

Tighten the Clevis Pin to ensure that the antenna is secure.

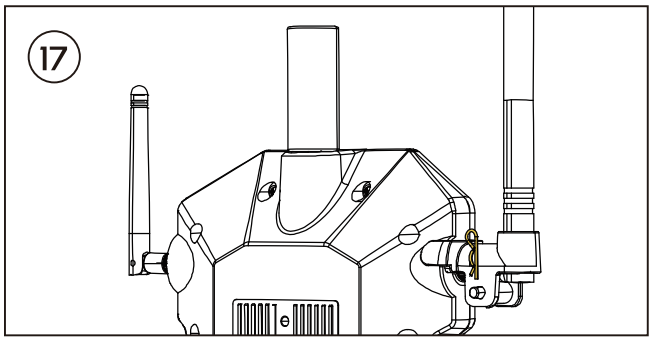

Pass the R-clip through the holes in the Clevis Pin, making sure the Clevis Pin are secure.

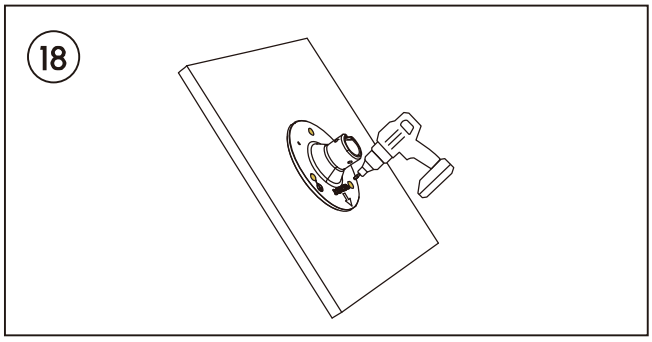

Position the mount on the roof with Wood Nails for Wood(Recommended) and mark the locations for four holes (5/16″ or 8mm). **Drill** the holes, ensuring that the center hole is drilled to an adequate depth to allow the Ethernet Cable to be threaded into the house for router connection.

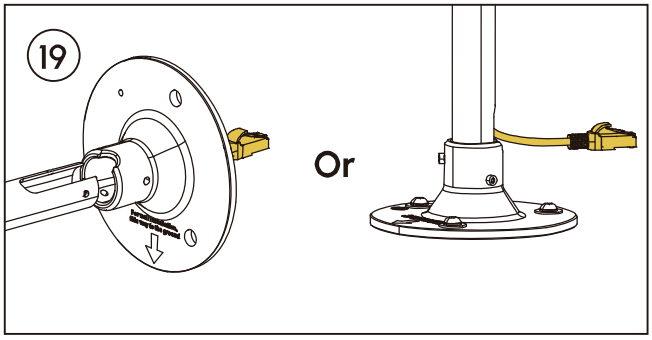

Thread the Ethernet Cable through the middle hole of the mount, or **pull out** the Ethernet Cable through the opening or gap in the pole carefully.

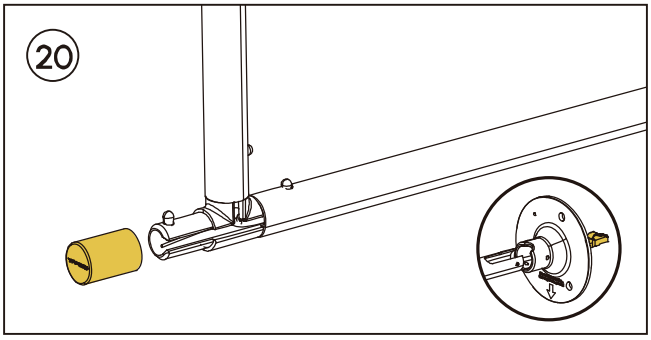

Attach the cap securely to the side of the T-joint.

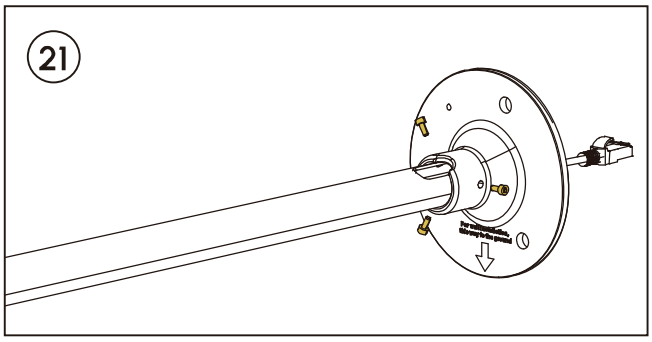

Screw in three Connection Bolts for Pole to stablize the mount and Standard Pole.

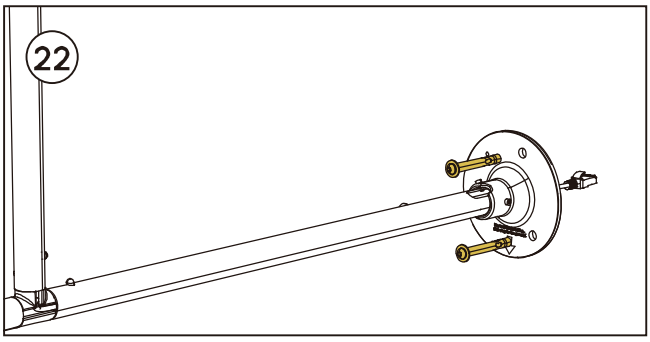

Secure the mount by **fastening** the three Connection Bolts for Pole. Use wood screws for wooden surfaces, expansion bolts for hard surfaces like concrete or walls and grass pegs for lawns.

⚠ WARNING

- When installing the Data Center Set on the roof, exercise extreme caution. Ensure compliance with local regulations regarding working at heights and always use appropriate safety equipment.

2.Installation Guide

NOTICE

■ Please make sure that the place you choose for insatallation has a clear of the sky with at least 120 degree of unobstructed space.

Method 2 Ground Installation

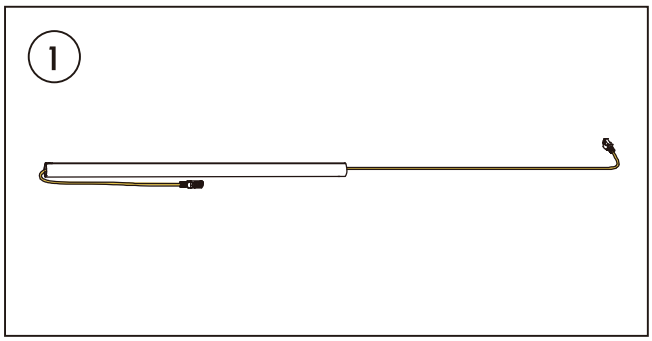

Locate the Ethernet Cable and extension pole provided in the Yarbo Core box. **Thread** the Ethernet Cable through the Extension Pole.

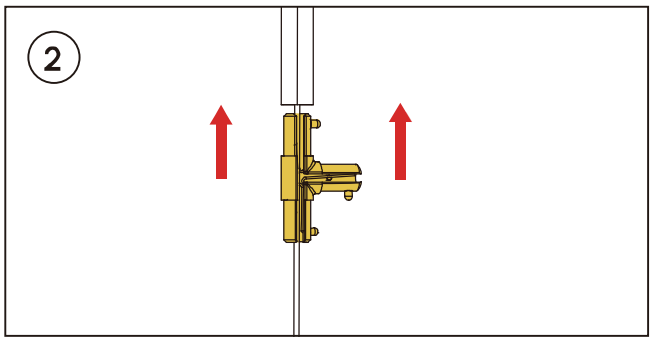

Press the cable into the crevice of a T-joint as shown in the picture. **Connect** the Extension Pole to the T-joint by pressing the round button on the T-joint and **align** this button with the hole in the Extension Pole.

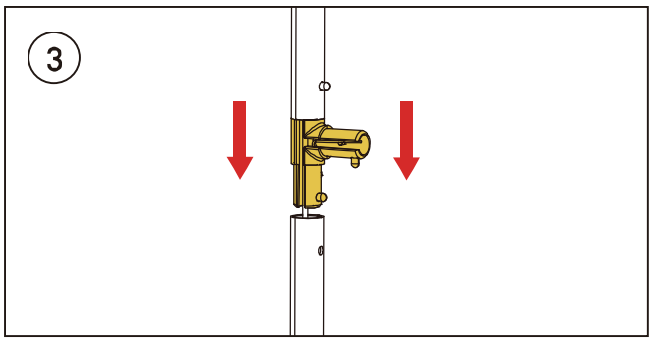

Press the round button on the T-joint and **align** it with the hole in the Standard Pole to connect two parts and secure the connection.

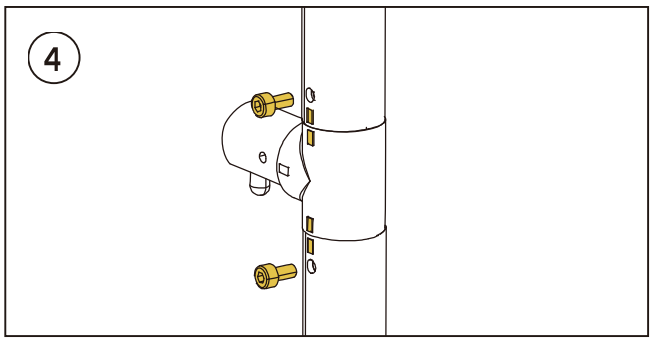

Screw in the two connection bolts to stabilize the T-joint, Standard Pole, and Extension Pole.

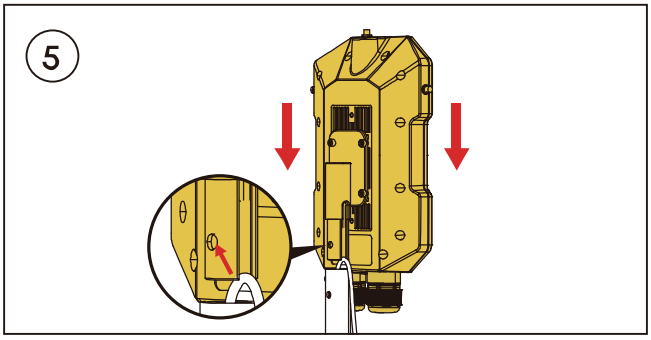

Connect the Data Center to the Extension pole (press the small button on the Data Center and align this button with the hole in the pole). **Pull out** a small section of the cable to ensure it can be reached and connected to the Ethernet POE WAN port.

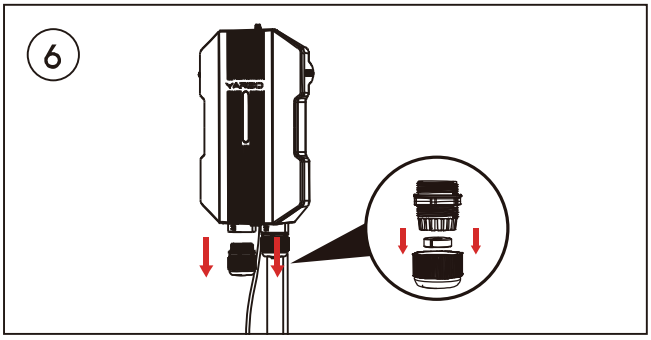

Carefully **unscrew** the entire gland set located on the WAN port of the Data Center. **Remove** the gland cover and **push out** the black rubber plug.

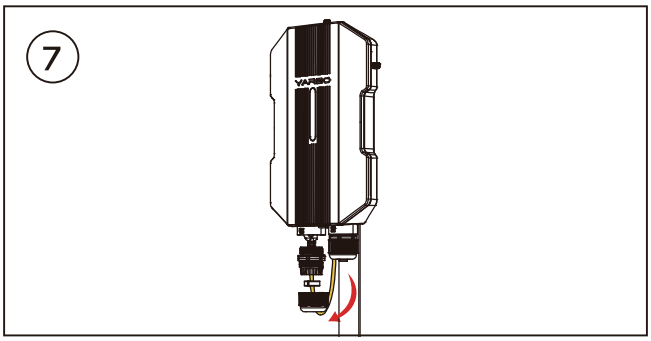

Thread the Ethernet Cable through the gland and its cover. **Locate** the opening of the black rubber plug and **snap** it onto the Ethernet Cable.

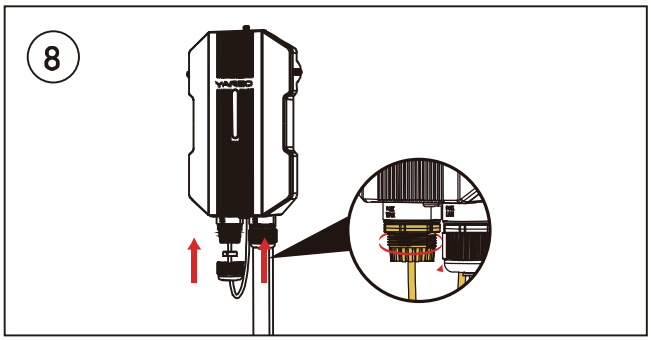

Connect the Ethernet Cable to the WAN port and **tighten** the gland by screwing it in.

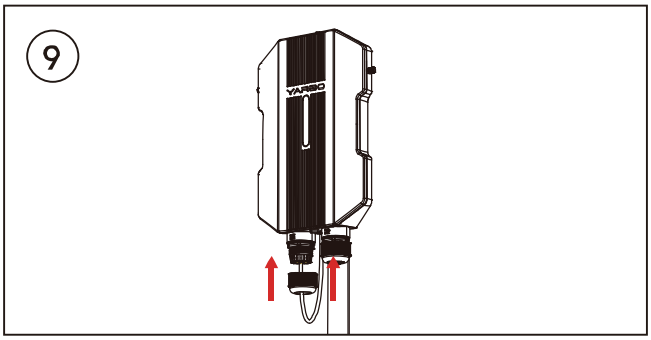

Push the black rubber plug into the gland.

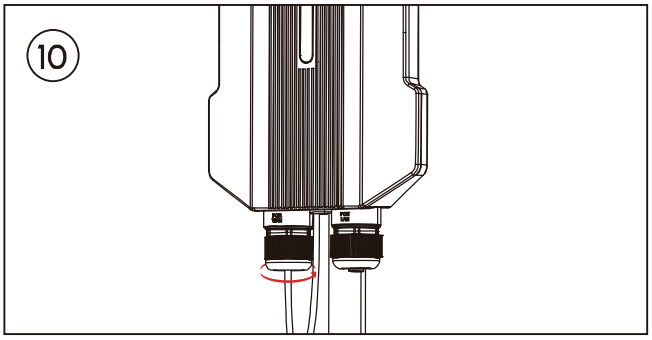

Screw and **tighten** the cover of the gland.

2.Installation Guide

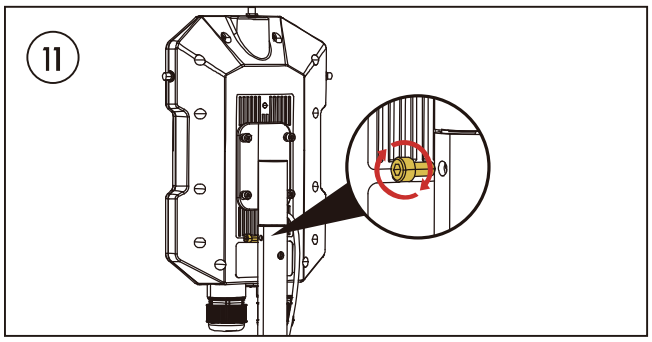

Screw one connection bolt to fasten the connection part between the Data Center and the Extension Pole.

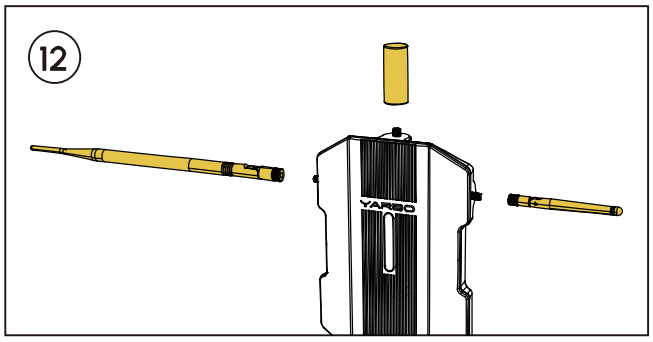

Locate the three antennas provided in the Yarbo Core box and securely **tighten** them.

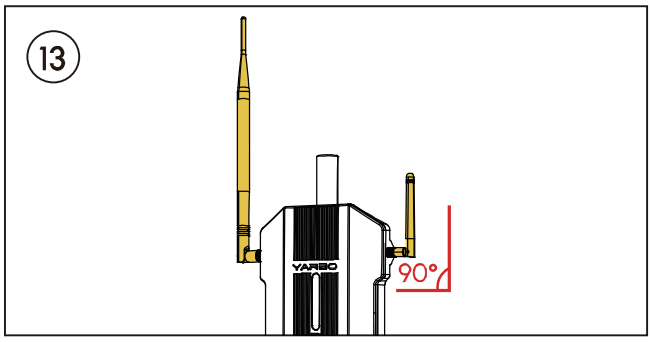

Fold the HaLow Antenna and Bluetooth Antenna at a 90-degree angle, directing them upwards towards the sky.

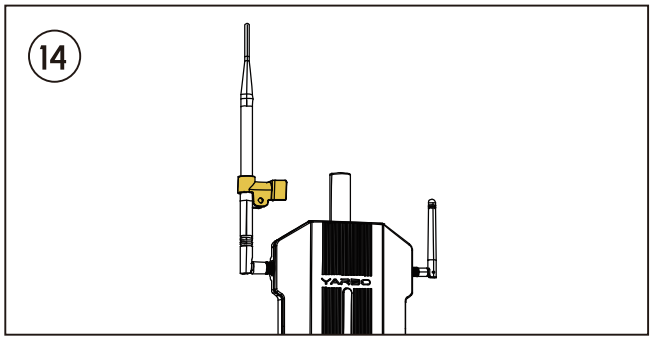

Locate the HaLow Antenna Clips through the HaLow Antenna.

NOTICE

- If it is impossible to drill through the wall or other hard material, the ethernet cable can be dragged out from the side of the mount.

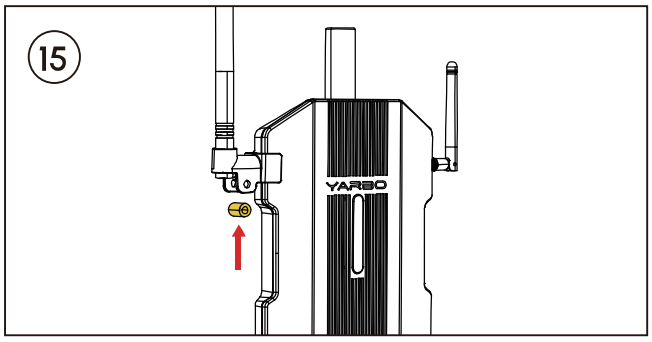

Move the HaLow Antenna Clips to the bottom of the Halow Antenna and **snap** the Data Center. Then put on the Clip bushing.

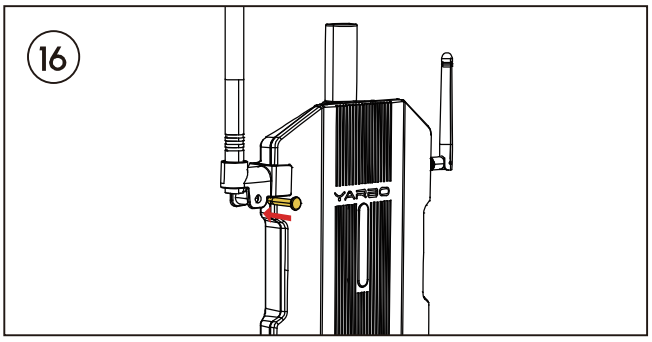

Tighten the Clevis Pin to ensure that the antenna is secure.

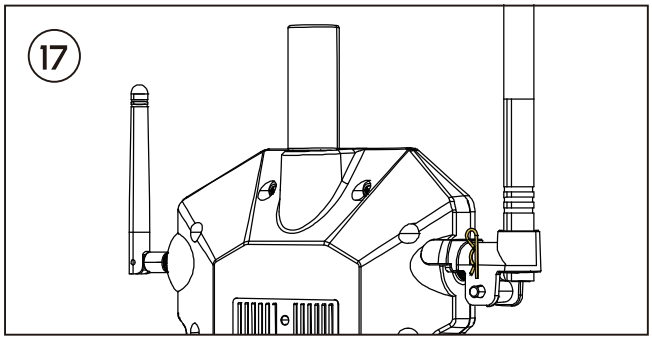

Pass the R-clip through the holes in the Clevis Pin, making sure the Clevis Pin are secure.

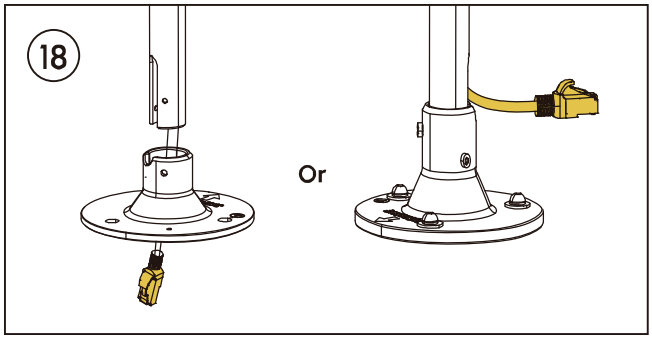

Thread the Ethernet Cable through the middle hole of the mount, or **pull out** the Ethernet Cable through the opening or gap in the pole carefully.

2.Installation Guide

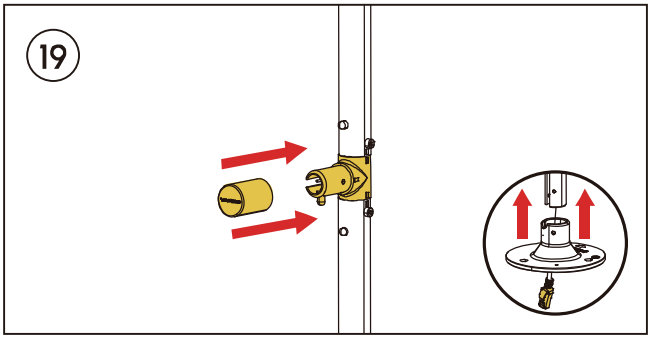

Attach the cap securely to the side of the T-joint.

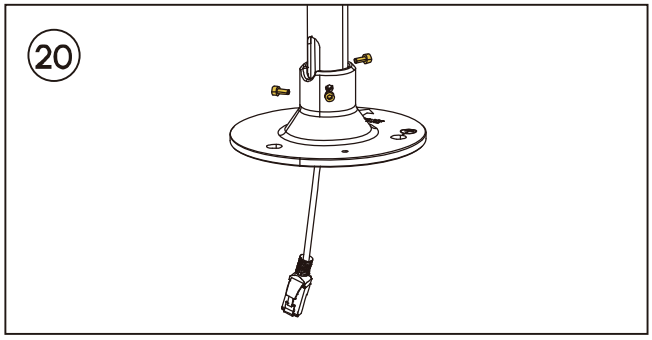

Screw in three connection bolts for pole to stablize the mount and Standard Pole.

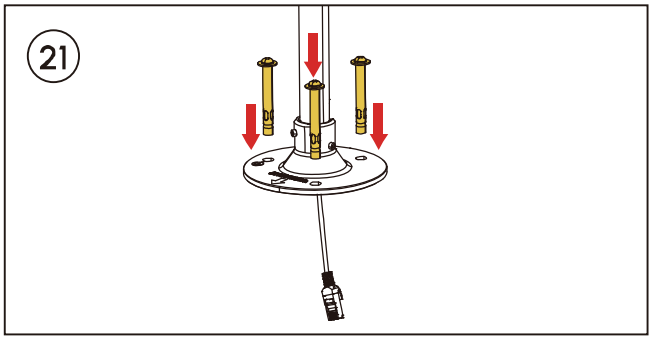

Secure the mount by **fastening** the three connection bolts (use wood screws for wooden surfaces, expansion bolts for hard surfaces like concrete or walls, and grass pegs for lawns).

⚠ WARNING

- When installing the Data Center Set on the roof, exercise extreme caution. Ensure compliance with local regulations regarding working at heights and always use appropriate safety equipment.

2.3.3 Ethernet Cable Connection

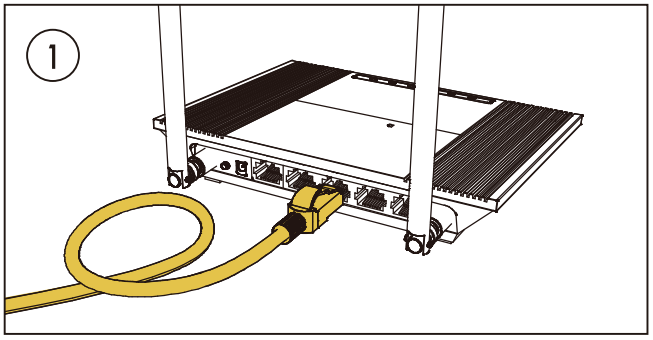

Locate the 2-meter long Ethernet Cable and the POE power adapter provided in the Yarbo Core Box, and **connect** one end of the Ethernet Cable to the LAN port on the router.

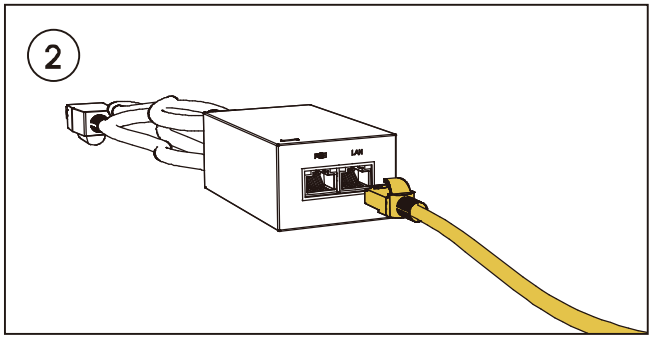

Connect the other side of the Ethernet cable to the LAN port of POE power adapter.

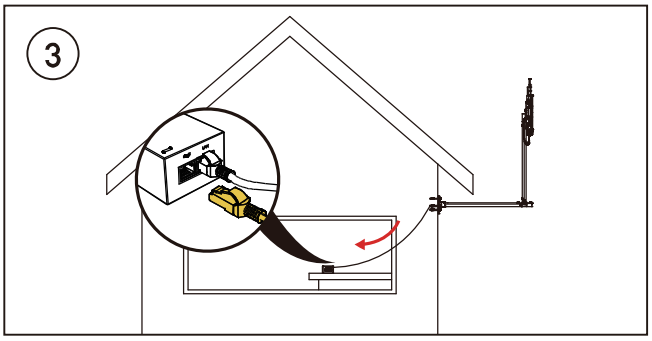

Pull out the 30-meter Ethernet Cable that has been threaded through the Data Center setup. Connect one end to the POE port of the POE power adapter and the other end to the POE WAN port of the Data Center.

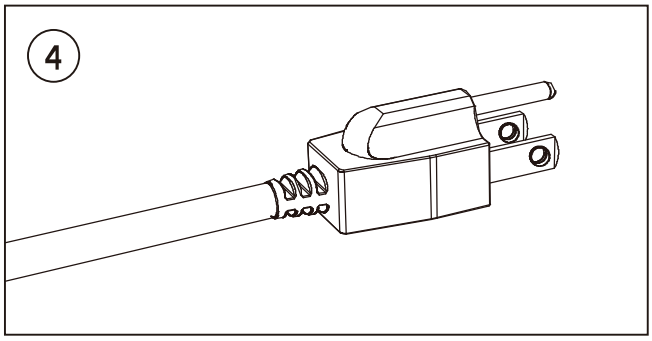

Insert the plug of the power adapter into the electrical outlet.

2.3.4 Data Center Signal Lights

LED Indicator	Status	Description	Action
Solid Green	Normal	1. Normal RTK Signal 2. Normal Internet Connection	/
Flashing Green	Internet abnormal	1. Normal RTK Signal 2. No Internet Connection	Check the status of Internet connection
Flashing Red	RTK Signal abnormal	1. No RTK Signal	Check cable connection is correct, inspect if RTK antenna is broken or loose
Flashing Blue	Pairing mode	1. Pairing mode activated	/
Solid Blue	Pairing successful	1. Pairing is successful	/

2.4 Installing the Docking Station

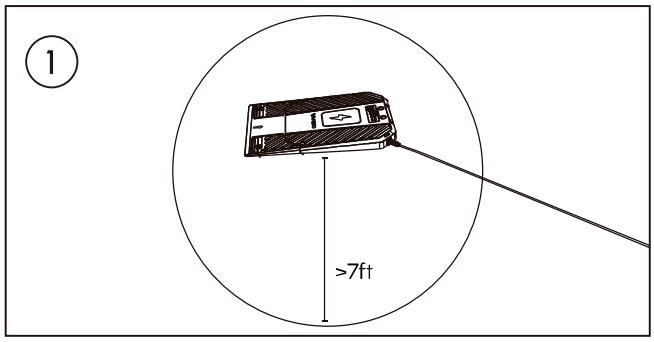

Ensure the installation location for the Docking Station has at least **7 feet** of clearance in all directions. Before proceeding, make sure you have already initialized Yarbo using the Yarbo App.

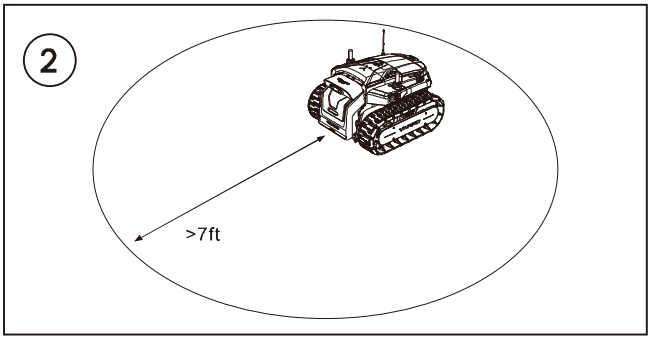

Drive Yarbo to the desired location for the Docking Station to test if there is strong GPS signal. Once Yarbo reaches a position with a strong GPS and network connection, the app will notify you.

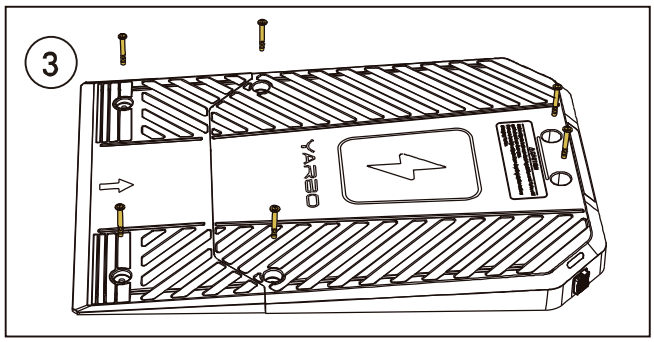

Place the Docking Station on the desired location. Secure the Docking Station by suitable methods. For soil/grass surface, use grass pegs. For concrete/brick surfaces, use expansion bolts. Grass pegs and expansion bolts are provided in the package.

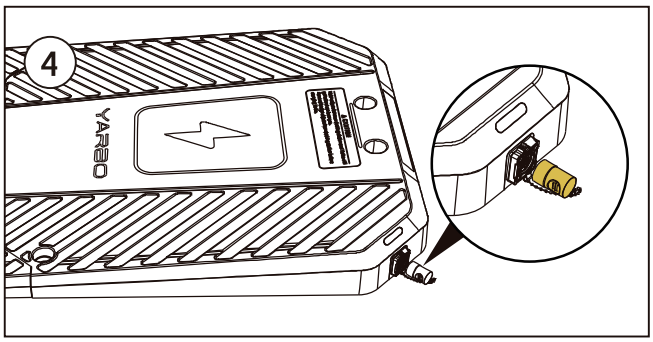

Press the snap and **remove** the cover.

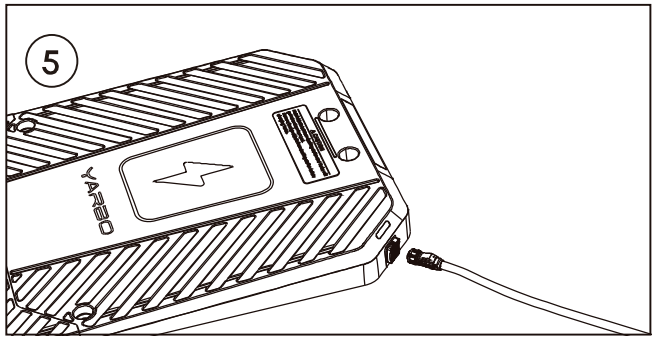

Connect the Power Cable to the port in the docking station.

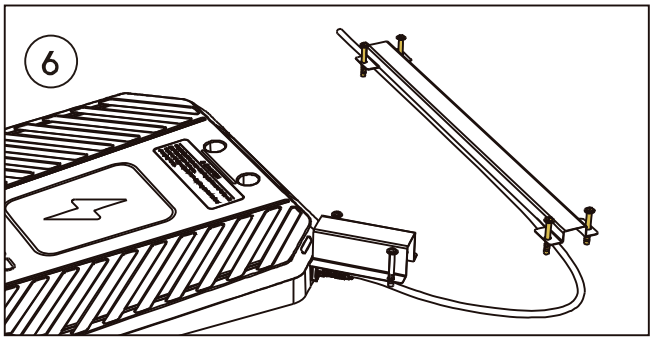

Place the Short Cable Ramp near the port and place the Long Cable Ramp on the Power Cable. Secure the Cable Ramp by suitable methods.

3.Charging

3.1 Charging Yarbo With Wired Charger

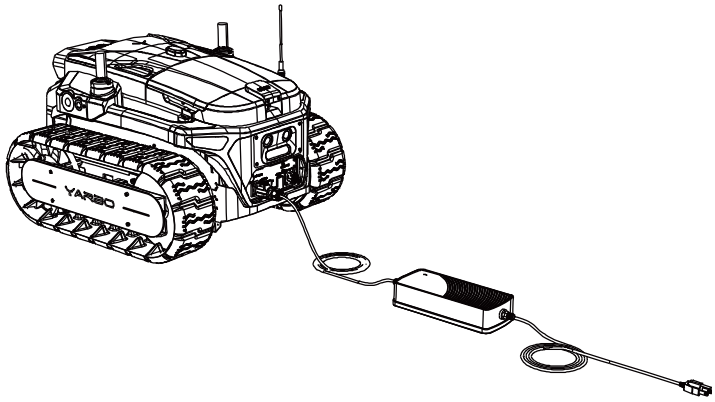

- To begin charging Yarbo, plug the wired charger into an electrical outlet, and then connect it to the charging port located at the rear of Yarbo.

⚠ WARNING

- Inspect the charging cable for any signs of damage or fraying. A damaged cable should be replaced to ensure safe and efficient charging. Also, please ensure that the connectors are clean and free from debris or dirt, as this can affect the charging process.
- When connecting the charger to Yarbo, please ensure a secure and snug connection. A loose connection may result in slow or interrupted charging. Double-check that the charger is firmly plugged into both Yarbo and the power source.
- Please ensure that the wired charger you are using is compatible with Yarbo. Check the charger's specifications and ensure it provides the appropriate voltage and current for charging Yarbo. Wrong voltage setting will damage the wired charger and Yarbo's battery pack, may lead to fire and explosion.

3.2 Charging Yarbo with Docking Station

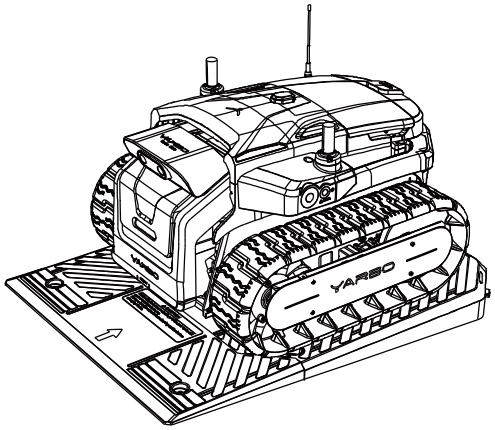

① Once the Yarbo is placed at the **center of the docking station**, automatic charging will commence without user intervention for 5 minutes.
② Click the **Charge** button on the APP home page if you want Yarbo initiate the charging process right now.

Autonomous Recharge

- Before using autonomous recharge, you need to:

  ① Make sure you have already set up a map for Yarbo.
  ② Yarbo is located within your area.
  ③ Make sure the RTK Signal is strong or medium.

- Normally, Yarbo will automatically return to charge when it detects low battery level (<20%). You can also manually send Yarbo to the docking station to recharge by:

  ① Tapping the "Recharge"button on the Yarbo app's virtual controller page
  ② Tapping the "Recharge"button on the Yarbo app's automonous plan page.

Manual Recharge

- Use the physical/virtual controller, manually drive Yarbo onto the docking station. Ensure that the Yarbo is positioned directly at the center of the docking station and parked in the correct orientation. Plase.

4.Features Introduction

4.1 Remote Control

4.1.1 Camera View

The binocular camera positioned at the front and two sides of the Yarbo core plays a vital role in its visual algorithm and brings you to the next level of wire-free experience. This kind of camera is similar to human eyes, equipped with two cameras that can capture two images with disparity, enabling depth measurement, obstacle recognition, and precise positioning.
Moreover, the high-performance CMOS cutting-edge manufacturing tech guarantees high dynamic imaging capability and the ultra-wide field of view ensures adaptability to challenging scenarios, minimizing the effects of complex lighting conditions on recognition algorithms.

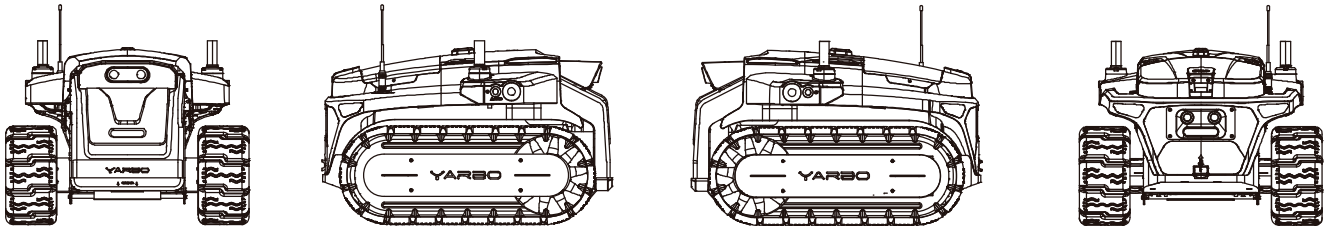

4.1.2 Anywhere Control

The remote control allows you to control your Yarbo anywhere, anytime, without a distance limit. Real-time image viewing could be achieved through a Wi-Fi connection, which achieves low power consumption and low latency, and image transmission technology to reach long-distance communication and remote control functions via the App.



4.2 Intelligent Towing

The intelligent towing could be applied through a tow hitch with a strong grip on the track and the driving motor to implement fine parking and spot-to-spot functions. Fine parking function requires a physical controller to control heavy objects like cars, sailboats, or private jets to park in a specific position, while spot-to-spot transportation could be realised by drawing a route on the Yarbo app through the additional support module and the different sizes of trays to carry stuff (up to 15kg) like water, ingredients, camping items, etc.

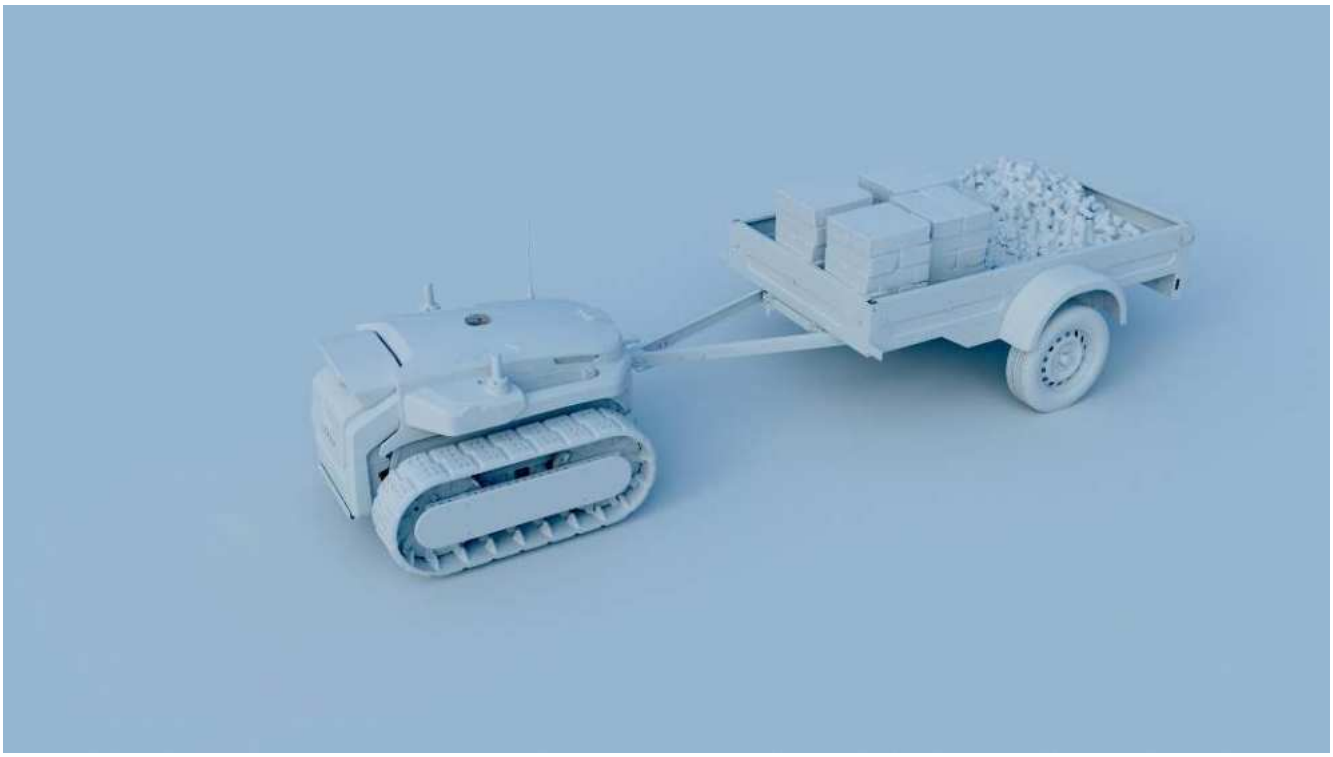

4.3 Auto Patrol

The auto patrol using RTK GPS and public network communication enhances your yard's security 24/7 by identifying intruders, sending immediate alerts, and offering access to a live feed for real-time monitoring. Users could customise the patrol schedule and alarm degree, the abnormal state and location information of the core.



4.4 Follow Me

The 'follow me' function using the visual algorithm to realise human posture recognition and measure distance, allows Yarbo core to intelligently follow users with tow hitch or any yard modules they need without pushing or carrying tools.



5.Maintenance Guide

5.1 Before Conducting Any Maintenance

⚠ WARNING

- Please ensure that you do not wear open-toed shoes or go barefoot when performing the following maintenance tasks.
- Always use appropriate Personal Protective Equipment (PPE). Wear protective gloves and goggles whenever performing maintenance tasks or when needed.
- Ensure that Yarbo is switched OFF and disconnects the battery when performing the following maintenance tasks.

Disconnecting Battery from Yarbo

① **Press** the Emergency Stop Button.
② **Confirm** that Yarbo is turned off by checking if all the lights are switched off. Unscrew the bolts on the side of the battery cover.
③ **Remove** the battery cover and unplug the cable connecting Yarbo and battery pack.
④ **Remove** the battery pack and safely secure it.

5.2 Cleaning Yarbo Core

Please avoid using solvents or large amounts of liquid on plastic components, as commercial solvents can potentially harm the appearance and integrity of your Yarbo. Instead, use a clean and gentle cloth or a brush to remove debris, mud, and other particles. Please avoid using the high-pressure water hose or any high-pressure cleaning methods to clean the Yarbo core.

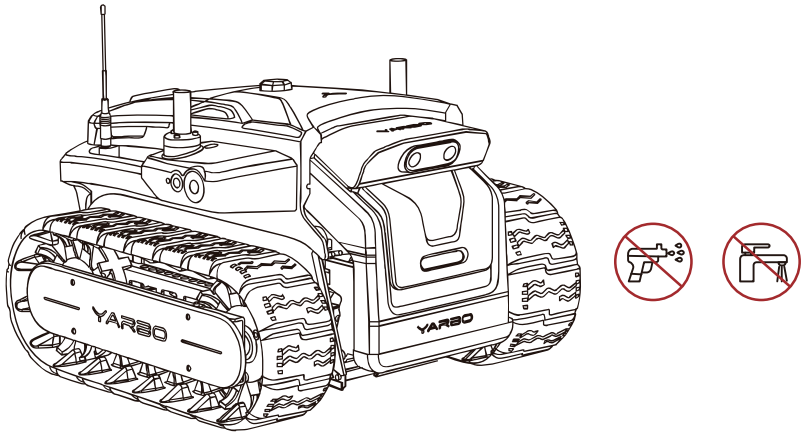

⚠ WARNING

- This statement advises that if the cameras used for obstacle avoidance is covered, dirty, or unclear, it may lead to confusion about the visual algorithms that rely on these cameras. It suggests cleaning the
- cameras with a soft cloth to ensure they are clear and functioning properly.
  Ensure that the power socket does not come into contact with anything wet.

5.3 Installing Tow Hitch

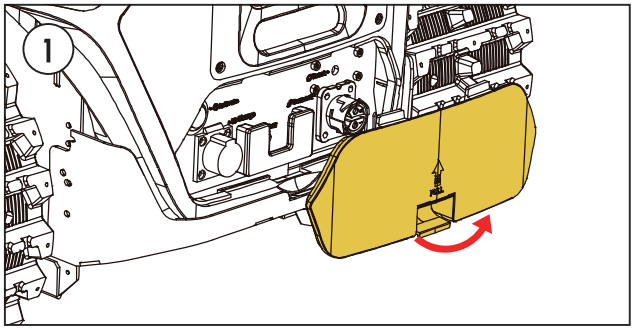

Remove the rear cover.

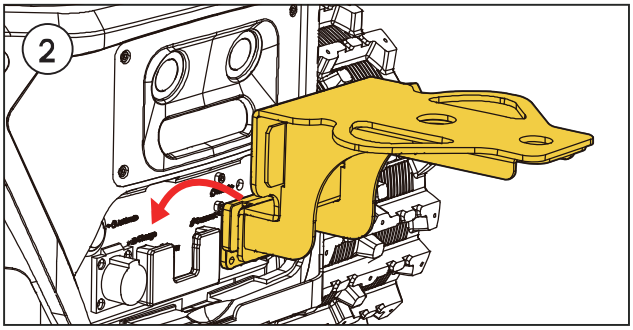

Locate the tow hitch provided in the package. Align the connection part of the tow hitch to the mount .

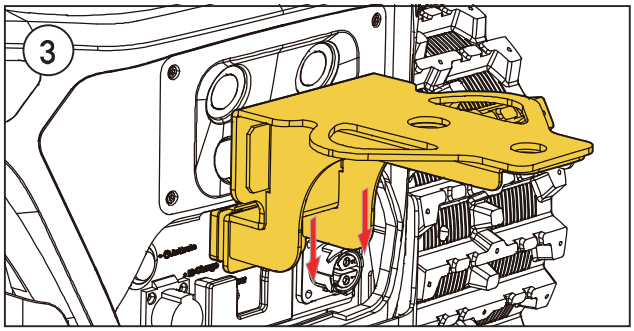

Slide the tow hitch down to the bottom of the mount.

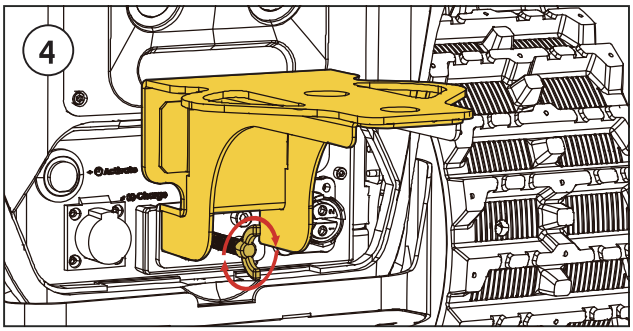

Locate the tow hitch bolt provided in the package and fasten the connection by screwing the tow hitch screw.

5.4 Applying Grease on the Tracks

It is crucial to apply grease regularly on the tracks to maintain smooth rotation of the drive wheel and road wheels. This is especially important during the machine's first year of use. Over time, grease may degrade and diminish, making regular refills essential. We advise applying grease every two weeks throughout the snow season. While various grease types are suitable, we recommend opting for high-vacuum grease for optimal performance. Below are the situations when immediate application of grease is needed.

Motion Hampered: When you sense that your Yarbo has not been greased for a while and its motion might be hampered due to this.
Noisy Operation: Unusual noise coming from the tracks indicates possible friction or wear. Applying grease can help reduce this noise by lubricating the moving parts and reducing friction.
Track Disengagement: If you notice the track becoming detached from the main body during inspection, it could be due to inadequate lubrication. Greasing the tracks can help maintain a secure connection between the tracks and the main body of the machine.

⚠ NOTICE

- The presence of debris or mud on the rubber tracks can negatively impact Yarbo's driving performance. To maintain optimal performance, make sure to clean debris and mud from the rubber tracks regularly.

5.5 Updating Firmware

Ensuring optimal performance of Yarbo at the hardware level is crucial, but it's equally vital to maintain the firmware up-to-date. Regular firmware update notifications will be made available through the Yarbo App. We highly recommend utilizing the built-in Over-The-Air (OTA) technology within the Yarbo App to update the firmware as soon as new versions are released. These updates consistently enhance the capabilities of the product.

Before proceeding to update firmware, please ensure that the following conditions are met:

① The battery level is at least 30%.
② Yarbo is connected to the internet.
③ No working schedules are active within the next hour to prevent interruptions during the update process.

5.6 Keeping Battery at its Best Performance

Extended periods of inactivity can significantly diminish the performance of the battery pack. To minimize this degradation, it's important not to leave the battery pack inactive for more than three months. Lithium-ion battery packs experience slight self-discharge over time. Charging the battery pack for at least 15 minutes once every three months will suffice to maintain its activity level.

NOTICE

- The presence of debris or mud on the rubber tracks can negatively impact Yarbo's driving performance. To maintain optimal performance, make sure to clean debris and mud from the rubber tracks regularly.

6.Specification

Yarbo Core

Item	Value
Dimensions, length*width*height	27*22*20in/675*566*512mm
Weight, without battery pack	123.5lbs/56kg
Weight, with battery pack	145.5lbs/66kg
Operational Temperature	-13°F to 113°F/-25°C to 45°C
Towing Ability	GTW up to 3500lbs/1600kg
Module Pitching Angle	0° to 18°
Internet Access Technology	WIFI, WiFi-halow, 4G
Navigation Technology	RTK-GPS
Charging Technology	Wired, Wireless
Obstacle Avoidance Technology	Computer Vision by cameras

7.Limited Warranty

Residential Warranty Coverage

Item	Parts	Warranty Period
Motor system	Linear Actuator	2 Years
	Driving Motor	
Power System	Lithium-ion Battery	2 Years
	Power Adapter	
	Docking Station	
Electric Control System	RTK System	2 Years
	Motherboard	
Vision System	Camera	2 Years
Consumables	Shell	1 Year
	Track	No Warranty

7.Limited Warranty

Repair and Warranty Services

We have established a global after-sales service team, supported by local service partners, to ensure prompt and efficient service for all our users world-wide. Our comprehensive support includes a dedicated call center and local repair centers in key markets.

To request a repair service, please send your request to **support@yarbo.com** or contact us at **+1(888)-550-6809**.
If your product is still within the free warranty period and meets the criteria for a warranty repair, the service will be provided at no charge. If your product does not qualify for free warranty repair, standard repair fees may apply.

YARBO INC.

www.yarbo.com

For Privacy Policy, please visit:
https://www.yarbo.com/legal/privacy-policy
Please note, the User Manual may be updated based on the changes in production, product specification, included contents and so on.
For the latest version of the User Manual, please visit:
https://www.yarbo.com/support

Refer to Friends & Get Rewards

Share Your Yarbo Journey

Join Yarbo Exclusive Community

+1 (888)550-6809

support@yarbo.com

1951 Ocean Avenue, Unit 3, Ronkonkoma, NY 11779 United States

V 1.4