Holzfforma®

for the working man

THE HOLZFFORMA BRUSH CUTTER USER MANUAL

Contents

Safety Instructions and Working Techniques 1

Installation of the Handle Bar (FF143RII/PRO FF226R/PRO FF541R/PRO) 10

Adjustment of the Throttle Control Cable (FF85 FF120 FF200 FF250 FF280) 11

Installation of the hose clamp (FF85 FF120 FF200 FF250 FF280) 11

Installation of Protective Device(FF85 FF120 FF200 FF250 FF280) 12

Installation of Protective Devices (FF143RII/PRO, FF 226R/PRO,FF541R/PRO) 13

HANDLE BAR INSTALLATION GUIDE (FF55 FF55E FF55R) 14

THROTTLE CABLE MOUNTING GUIDE 15

PROTECTIVE DEVICE INSTALLATION GUIDE (FF55 FF55E FF55R) 16

HANDLE BAR INSTALLATION GUIDE (FF400 FF450 FF48) 17

REFUELING OPERATION GUIDE 22

SUSPENSION STRAP POSITIONING GUIDE 23

UNIT BALANCING GUIDE 24

ENGINE START/STOP CONTROL GUIDE (FF85 FF120 FF200 FF250 FF280) 24

ENGINE START/STOP PROCEDURE (FF143RII/PRO FF226R/PRO FF541R/PRO) 26

Start / stop Engine (FF55 FF55E FF55R) 27

Start / stop the engine(FF400 FF450 FF480) 30

Operating Instructions 32

Air filter 32

CARBURETOR ADJUSTMENT 33

TRANSMISSION LUBRICATION PROCEDURE 34

Equipment Storage 34

METAL CUTTING TOOL SHARPENING 34

MOWING HEAD MAINTENANCE GUIDE 34

FUEL SYSTEM MAINTENANCE 37

Minimize Wear and Avoid Damage 37

Important components 38

TECHNICAL DATA 42

WARRANTY CONDITIONS 43

Safety Instructions and Working Techniques

Critical Operation Precautions

Special safety measures must be observed when operating this power tool due to the high-speed rotation of cutting attachments.
Thoroughly read and retain this manual before initial use.
Noncompliance may result in severe injury.
Adhere to all applicable safety regulations, national standards, and trade association requirements.

Personnel Requirements

Untrained operators must receive instruction from certified dealers or attend specialized training courses.
Operators under 16 years old are prohibited from using the unit except during supervised training sessions for those over 16.
Maintain 15m clearance from bystanders, particularly children and animals.

Equipment Handling & Storage

Secure the unit against unauthorized use when not in operation. Users bear full responsibility for third-party injuries or property damage.
Only transfer or rent the power tool with this instruction manual to qualified personnel.

Operational Restrictions

Comply with local noise ordinances and time-of-use limitations for engine operation.

Health Requirements

Operators must be physically capable and mentally alert.
Consult a physician prior to operation if medical conditions may be aggravated by strenuous activity.
Pacemaker Precautions
The ignition system generates low-intensity electromagnetic fields that may interfere with cardiac pacemakers.
Pacemaker users must consult their physician and device manufacturer before operation.

Prohibited Actions

Never operate under the influence of alcohol, drugs, or medication that reduces alertness.
This power tool is exclusively designed for cutting grass, shrubs, scrub, and similar vegetation. Any other uses increase accident risks.
Install only HOLZFFORMA-approved cutting attachments and accessories. Consult dealers for technical equivalence verification.
Unauthorized modifications void safety certifications. HOLZFFORMA assumes no liability for damages caused by non-approved alterations.
Avoid pressure washing. High-pressure water jets may damage components.

Additional Notes

HOLZFFORMA recommends using genuine accessories for optimal performance.
WARNING: Deflectors cannot block all ejected debris (stones, glass, wires). Maintain safe distance during operation.

Clothing and Equipment



Clothing. Wear designated workwear and equipment. Garments shall be task-appropriate and non-restrictive. Preform-fitting clothing (e.g. base layers rather than loose outerwear).
Avoid garments prone to snagging (e .g. by branches/bushes) or with worn/movable components. Remove scarves, ties, and jewelry. Secure long hair (using headgear/helmets).



Footwear. Use protective boots with anti-slip grooved soles and steel toes. Rugged shoes with treaded soles are only permitted as alternative when operating brush cutters.

Warnings



Eye Protection. Wear close-fitting safety goggles compliant with EN 166 standard to reduce eye injury risks. Ensure proper positioning.
Face Protection. Use tightly sealed face shields. Dust masks alone provide inadequate eye protection.
Hearing Protection. Use personal hearing protection devices such as
Head Protection. Wear safety helmets during elevated work, intensive tasks, or where falling object hazards exist.



Hand Protection. Wear durable work gloves made of materials like leather.

Transportation of the Unit

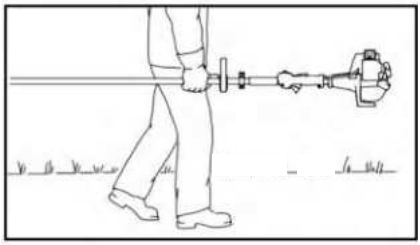

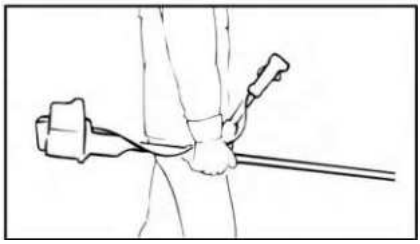

Carrying Methods. Carry the unit suspended on a carrying strap or balanced using the support rod.
Metal Cutting Tool Protection. Use protective casing for metal cutting tools during transportation, including short-distance transfers. (Refer to " Transporting the Unit" chapter)



Burn Prevention. Avoid contact with hot components (engine/ gearbox) to prevent burns.

Vehicle Securing. Lock the mounting device on vehicles to prevent tipping, structural damage, and fuel leakage.

Fueling Safety Guidelines



Flammability of Gasoline
Gasoline is highly flammable. Keep away from open flames and refrain from smoking during/after fueling.
Pre-Fueling Preparations
Ensure complete engine shutdown before fueling.
Allow engine to fully cool to prevent fuel overflow and fire hazards.

Fueling Procedures
Slowly open fuel tank cap to release residual pressure and avoid splashing.
Perform fueling only in well-ventilated areas.
Immediately clean fuel spills. Avoid fuel contact with clothing; change contaminated garments promptly.



Post-Fueling Actions
Securely tighten fuel tank closure to prevent loosening from engine vibrations and leakage risks.

Fuel Leakage Awareness
Check tank seals regularly. Never start engine if leaks are detected - fuel combustion may cause life-threatening situations.

Before Operation Checklist

¡æUnit Condition Verification
Verify the unit's flawless working condition by referring to the relevant chapter in the operating manual.

¡æFuel System Inspection
Inspect all visible fuel system components including tank cap, hose connections, and manual fuel pump (where equipped) for leaks. Do NOT start the engine if leakage or damage is detected - fire hazard!

¡æPre-Commissioning Requirement
Units requiring repair must be serviced exclusively through authorized dealers prior to commissioning.

¡æAttachment Compliance Check
Confirm approved configuration of cutting tool, guard, handle, and shoulder strap assembly with all components properly installed.

¡æControl System Validation
Ensure stop switch moves freely to "STOP "/"0" position
Verify throttle lever lock (if equipped) and throttle lever mobility
Confirm throttle lever automatically returns to idle position

¡æElectrical Safety Check
Inspect ignition wire terminal tightness . Loose connections may cause sparking - fire risk!

¡æCutting Tool Requirements
Correct installation of cutting tool/ mounting accessories
Secure mechanical engagement
Undamaged condition
Protective Device Audit
Examine guards and movable disks for:
Structural integrity
Legible safety markings/arrows
Replace components showing damage or illegible markings.

¡æControl Mechanism Restriction
Unauthorized modifications to control elements or safety systems are strictly prohibited.

¡æHandle Maintenance Standard
Maintain handles in clean, dry condition free from oil contamination and debris.

¡æAdjust the Hanging
Adjust the strap and handle according to height. Follow the sections "How to Wear the Suspension Strap" and " Balancing the Unit".
Operate the unit only in reliable working condition - accident risk!

¡æEmergency Situations
Practice rapid unit lowering using the suspension strap. Do not drop the unit during training - damage risk!

¡æStart the Engine
Operate at least 3 meters from refueling areas in ventilated spaces.
Maintain firm grip on unit placed on flat, stable surface. Prevent cutting tool contact with objects/ground during startup - rotation hazard!

¡æPersonnel Requirements
Single operator only. Prohibit unauthorized persons within 15m radius, especially during startup - projectile injury risk!
Avoid physical contact with cutting tool - injury hazard!



¡æStarting Procedure
Never hand-start the engine. Follow operating manual instructions strictly.



¡æCutting Tool Operation
After releasing throttle lever, allow cutting tool to complete inertial rotation.
Verify engine idling stability. Cutting tool must stop when throttle lever returns to idle position.

¡æFire Prevention
Keep flammable materials (chips/bark/dry grass/fuel) away from exhaust flow and muffler surfaces - **fire hazard!**

How to hold and operate the unit

Always hold the unit securely with both hands on the handles.
Maintain a secure and stable position.
For models with a two-handed handle

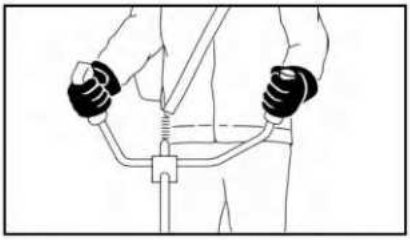

Place your right hand on the control handle and left hand on the tubular handle.
For circular handle configurations

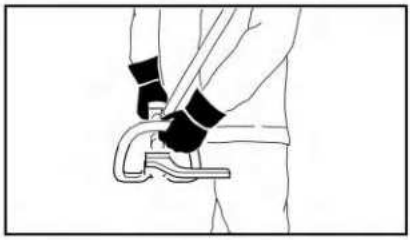

With clamp components (step limiters):
Left hand on the circular handle
Right hand on the control handle
(Suitable for left-handed users)

During operation

Always maintain secure and stable position.

¡æEmergency Stop
In case of imminent danger or emergency, immediately:
1.Stop the engine
2.Set the universal lever/stop switch to STOP position or 0

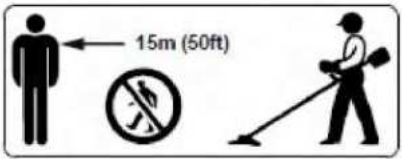

¡æSafety Distance
15m (50ft) clearance required.
Unauthorized persons must stay outside this radius - flying objects may cause accidents.
Apply the same distance to protected objects (vehicles, window glass) - material damage risk persists even beyond 15m.

¡æIdle Speed Verification
Confirm flawless engine operation at idle:
Cutting tool must stop completely after releasing throttle lever
Regularly check and adjust idle mode

¡æService Requirement
If cutting tool continues rotating at idle:
Take unit to specialized HOLZFFORMA dealer for repair (brand-recommended service).

¡æTerrain Warning
Exercise extreme caution on:
1.Icy surfaces
2.Wet/snowy/uneven terrain
3.Slopes
Slipping hazard!

¡æObstacle Alert
Watch for hidden dangers:
1.Tree stumps
2.Exposed roots
Trip hazard!

Work only while standing on the ground. Under no circumstances work on an unstable surface, on a ladder, or on an elevated work platform.
When using hearing protection, be especially attentive and cautious as perception of warning sounds (shouts, signal tones, etc.) is limited.
To prevent excessive fatigue, take timely breaks from work - **risk of accident!**
Work calmly and thoughtfully - only in good lighting and visibility. Operate carefully without endangering others.



The unit produces toxic gases as soon as the engine starts. These gases may be invisible and contain hydrocarbons and benzene.
Never operate in enclosed or poorly ventilated spaces, even when using units with a catalyst.
When working in trenches, depressions, or confined spaces, ensure adequate ventilation. **Danger of poisoning!**
If experiencing nausea, headache, vision impairment (e.g. reduced field of view), hearing impairment, dizziness, or decreased concentration, immediately stop working. These symptoms may indicate elevated exhaust gas concentrations - **dangerous risk of accident!**
In quiet areas with minimal parked vehicles (windows closed):
Exhaust gas emission - material damage.
Do not leave the engine running unnecessarily. Accelerate only when required.
Do not smoke while operating the unit or near running equipment - fire hazard! Flammable gasoline vapors may escape from the fuel system.
Dust, fumes, and smoke generated during operation can cause serious health hazards. Wear a respirator in heavy dust/smoke conditions.
If the unit has been subjected to unintended stress (e.g., impact or fall), thoroughly inspect its operational condition before reuse - refer to " Before Starting" section.
Specifically check:
Fuel system for leaks
Functionality of safety devices
Units not in perfect working condition are prohibited from operation. When in doubt, contact authorized dealers.
Under no circumstances should you operate without the appropriate unit and cutting tool - danger of injury from thrown objects!

Area Inspection

1.Solid objects (stones, metal parts, etc.) that may be thrown during operation
2.Potential hazards even at a distance

Cutting Tool Precautions

Thrown objects can damage:
1.Cutting tool components
2.Surrounding objects (e.g., structures)

Special Working Conditions

Exercise extreme caution when:
1.Operating in low-visibility areas
2.Working in densely overgrown vegetation



High Shrubbery Handling

When mowing under bushes/hedges:
1.Maintain minimum 15cm cutting height
2.Protect wildlife habitats



Machine Shutdown Protocol

Before leaving the machine:
1.Fully stop the engine
2.Secure cutting tool position

Cutting Tool Maintenance

Regular inspection requirements:
1.Verify structural integrity and fastening
2.Check for cracks (including hairline fractures)
3.Maintain blade sharpness standard
4.Clean grass/branch residues from attachments

Replacement Procedure
Before cutting tool replacement:
1.Stop engine completely
2.Confirm tool rotation cessation



Gearbox Warning
During operation:
1.Gearbox reaches high temperatures
2.Avoid contact to prevent burns

Trimmer Head Operation
Protective Device Installation
Install appropriate protective guards and accessories according to the operation manual specifications.
Only use properly installed protective guards. Using improperly installed guards may cause injury due to guard rupture or component damage.
When using sharp cutting blades, ensure cutting lines remain undamaged by defective components.
Mower Head Adjustment Guidelines
During manual cutting head adjustment, maintain cutting line length within specified limits. Always shut off the engine before adjustment to prevent injury.
Unauthorized Modification Hazards
Unauthorized use of extended cutting lines reduces engine operating speed. This causes clutch slippage-induced overheating, damaging critical components (e.g. couplings, polymer housings).
Operating the cutting tool in idle mode poses injury hazards.

Metal Cutting Tool Operation
Genuine Tool Recommendation
HOLZFFORMA recommends using genuine metal cutting attachments (Model: HOLZFFORMA). These attachments ensure optimal compatibility and performance.

Operational Characteristics & Risks
Cutting tools operate at high rotational speeds, generating forces affecting the equipment, tool integrity , and workpiece.
Sharpen cutting tools per grinding specifications. Unsharpened tools cause imbalance, potentially overloading equipment with rupture risks.
Dull or improperly ground blades induce excessive stress, accelerating tool degradation.
Inspect tools after contact with hard objects (stones, rock debris, metal fragments) for cracks/deformation.
Remove burrs and material buildup immediately - loose particles may eject during operation causing injuries
Contact between rotating cutting tools and hard surfaces (stones/metal) may generate ignition-capable sparks.
Avoid tool use near combustibles during dry conditions. Consult local fire authorities for hazard assessments.
Never repair cracked tools through welding/straightening - such alterations induce structural imbalance.
High-velocity particle ejection poses severe injury risks to operators/ bystanders.
Use tools within maximum diameter limits specified for your equipment.
Ensure tools meet material quality standards with proper geometric specifications (profile, thickness).

Vibration
Long-Term Usage Risks
Prolonged operation may cause vibration-induced circulatory disorders (Vibration White Finger syndrome).

Operational Duration Factors
Equipment usability varies case-by-case. To extend usage duration: use thermal gloves and schedule work breaks. Factors reducing duration include pre-existing circulatory conditions (cold/tingling fingers), low ambient temperatures, and excessive grip force (impairs blood circulation).
Medical Advisory
Regular medical examinations recommended for frequent users with persistent symptoms (e.g. finger numbness).

Maintenance & Repair Specifications

Perform only maintenance procedures described in this manual. All other services must be conducted by authorized HOLZFFORMA dealers.
Use genuine HOLZFFORMA spare parts to prevent accidents/equipment damage. Contact dealers for technical inquiries.
Operational Protocols
Shut off the engine during repairs/maintenance, except during carburetor adjustments and idle speed calibration.
When starting the engine, disconnect the spark plug connector and loosen the plug. Perform starting procedures only with the engine in "stop" position to prevent backfire ignition hazards.
Never conduct maintenance near open flames due to fuel combustion risks.
Component Inspection Checklist
Verify fuel tank closure seals regularly
Use defect-free spark plugs approved by HOLZFFORMA (see "Technical Data ")Inspect ignition cables for insulation integrity and secure connections
Maintain mufflers in sound condition
Never operate with defective/missing mufflers to avoid hearing damage
Avoid contact with heated muffler surfaces - burn risk exists during/after operation.
Anti-vibration components directly affect operational stability. Implement monthly condition checks to maintain damping efficiency

Equipment Carrying & Placement

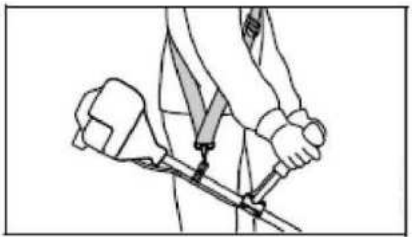

¡æAll accessories are included in original packaging.
¡æThe motor assembly must be operated while secured with shoulder harness.
¡æShoulder harness is mandatory for grass/sapling cutting blades.
¡æSaw blades require quick-release dual-point harness systems.

Trimmer Head with Cutting Line

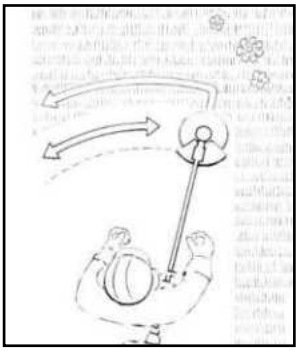

¡æMinimize bark damage during perimeter trimming. Follow fence post operation diagrams.
¡æ**Warning:** Substituting steel wire/cables for cutting line causes severe laceration hazards.

Young Plant Trimming Blade Instructions

This blade cuts turf grass, wild vegetation, and dense shrubs. Suitable for thinning saplings up to 2cm trunk diameter. Exceeding this limit causes blade damage.

Maintain ground-level operation during turf trimming/sapling thinning as illustrated.

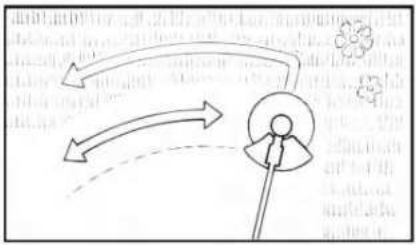

For wild plant thinning, insert blade vertically from above. Keep cutting edge below trunk level. Increased blade elevation raises lateral deflection risks.

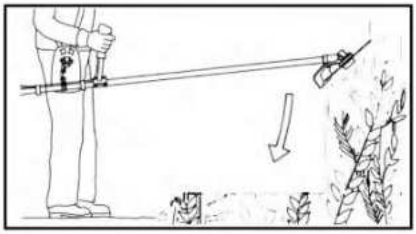

Improper use may cause blade fracture with projectile hazards.

Compliance requirements:

¡æAvoid contact with stones/metallic objects

¡æNever cut large-diameter wood/shrubs; use toothed saw blades instead

¡æInspect blades regularly; discard damaged units

¡æSharpen when visibly dull per manual instructions

¡æFor blade balancing, consult certified technicians

Saw Blade Operation Specifications

Application Scope

This blade is designed for cutting shrubs and trees up to 4cm in diameter. Optimal cutting performance is achieved when operating at full throttle with consistent feed pressure. Mandatory use of retaining collars matching the tool's diameter is required for safe operation.

Critical Warnings

Avoid blade contact with stones and soil to prevent cracking. Maintain sharp teeth through regular sharpening as specified in the manual - dull teeth significantly increase risks of blade fracture and operational hazards.

Kickback Hazard Zones

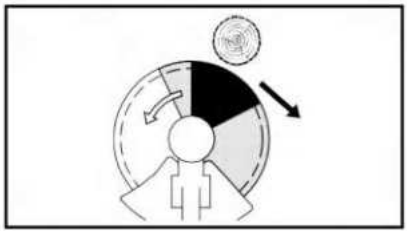

Black Zone (Maximum Risk)

Never position the tool in this zone. All cutting operations are strictly prohibited.

Gray Zone (Controlled Risk)

Operation in this area is permitted only for specially trained personnel with certified kickback mitigation skills.

White Zone (Safe Operation)

Tools must be installed and operated exclusively within this zone to minimize kickback potential.

Dual-Grip Handle Installation (FF85/FF120/FF200/FF250/FF280)

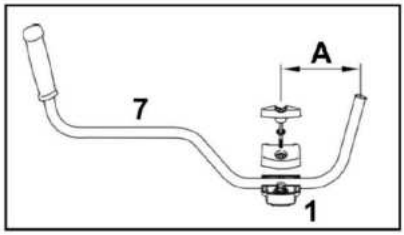

Installation Steps:

¡æInsert the tubular handle (7) into the lower clamp cup (1). Ensure the distance does not exceed 15cm (6").

¡æInstall the upper clamp cup and secure both cups together.

¡æInsert manual tightening bolts through both cups. Tighten until fully secured.

Warning: Do not rotate the control handle around the long axis from unboxing to installation completion.

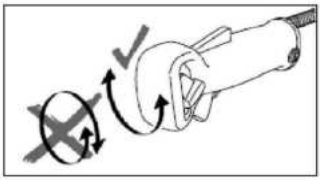

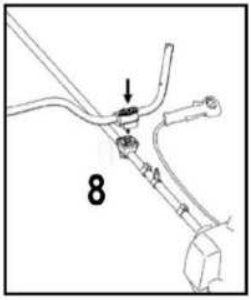

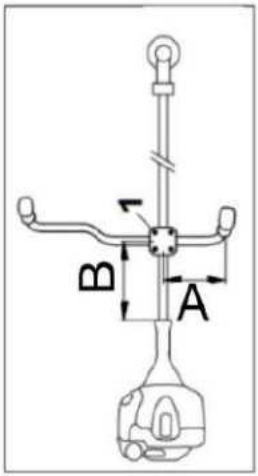

¡æPlace the handle support (8) at distance B (approximately 37 cm).

¡æInstall all components secured by hand-tightened bolts (facing the engine) onto the handle support (8).

¡æInsert the threaded screw into the handle support until fully seated, then partially tighten.

¡æAlign the tubular handle horizontally with the shank and verify dimension A.

¡æFully tighten the threaded screw.

Control Handle Assembly

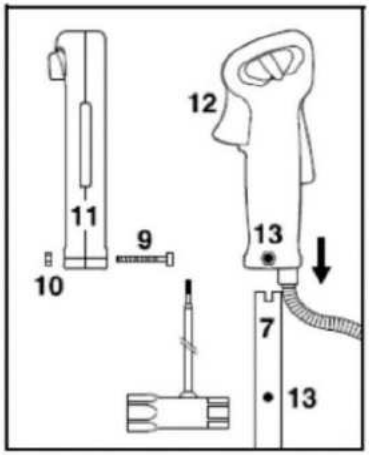

¡æRemove bolt (9) while leaving nut (11) inside the control handle.

¡æMove the control handle with throttle lever (12) toward the end of the tubular handle (7) until hole (13) is aligned.

¡æReinstall and tighten bolt (9).

Throttle Cable Attachment

Indication: Avoid bending or tightly routing the throttle cable. Ensure it remains freely movable.

¡æEngage the throttle cable (14) with the retainer (15).

Throttle Cable Adjustment

¡æRefer to the "Throttle Cable Adjustment" section to verify proper adjustment.

Handle Position Adjustment

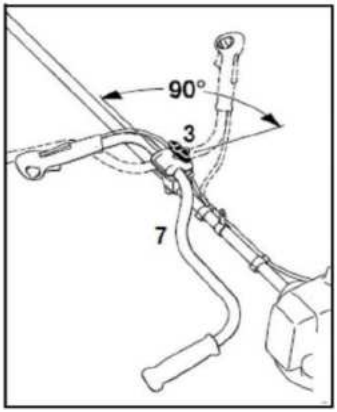

¡æLoosen the threaded screw (3) until the tubular handle (7) rotates freely.
¡æRotate the tubular handle 90° counterclockwise and tilt downward.
¡æHand-tighten bolt (3).

Working Position

Rotate the tubular handle clockwise following the reverse sequence of the transportation steps.

Installation of the Handle Bar (FF143RII/PRO,FF226R/PRO, FF541R/PRO)

¡æSecure the engine (A) to the tubular frame (B) using four screws (C).

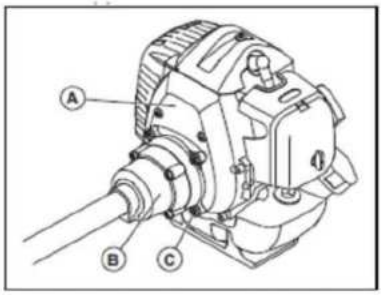

¡æInsert the handle into the retainer on the rod.

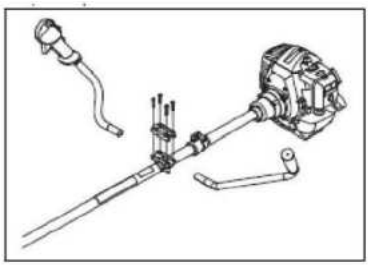

¡æInstall the protective coupling.

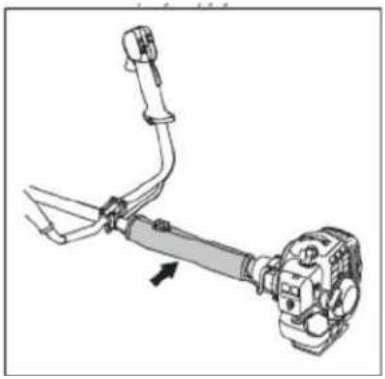

Connect the Throttle Cable and Switch Wires

¡æRemove the air filter cover. Route the throttle cable (A) through the carburetor bracket (B).

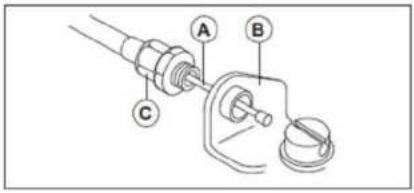

¡æFully insert the coupling (C) into the carburetor bracket. Position the slotted flange (D) on the carburetor. Maintain clearance between the slotted hole (E) for the cable end (F) and coupling (C).

¡æRotate the carburetor throttle cam and route the throttle cable (A) through the slot in the fitting.
¡æVerify that the cable end (F) engages with the slotted hole.
¡æDepress the throttle lever repeatedly to confirm smooth operation.
¡æAdjust the coupling (C). Ensure:
The throttle cam stop contacts the mating stop.
A 1-2 mm gap remains between the cable end (F) and slotted fitting when the throttle lever is fully released.
¡æTighten the lock nut (G) after completing throttle cable (A) adjustment.
¡æConnect the switch wires (H) to the engine terminals.

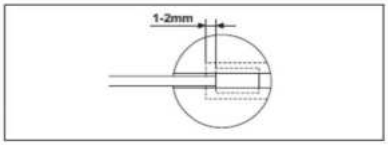

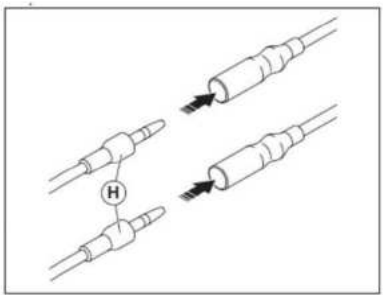

¡æSecure the switch wires and connectors with the clamp (I).

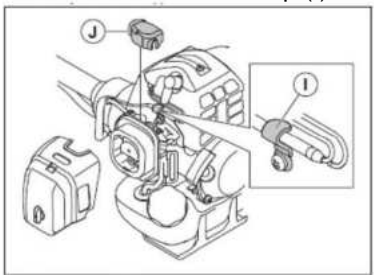

Install the dust cover (J) and reinstall the air filter cover.

Adjustment of the Throttle Control Cable (FF85,FF120,FF200,FF250)

Throttle adjustment must be performed after full assembly.
The control handle must be in the working position.
¡æApply tool pressure to fully engage the lock tab on the control handle into the end of the slot.

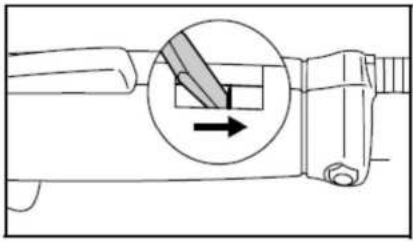

¡æFully depress the lock lever (1) and fuel controller (2) (full-throttle position) to verify proper throttle control cable adjustment.
Critical Note: Proper adjustment nsures normal startup, idle, and full-throttle operation.

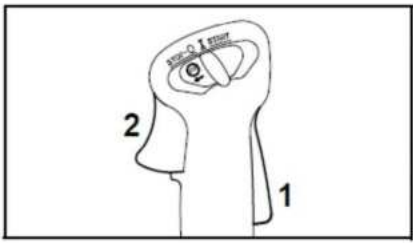

Installation of the hose clamp (FF85, FF120,FF200,FF250,FF280)

¡æThe hose clamp is included in the device supply scope.

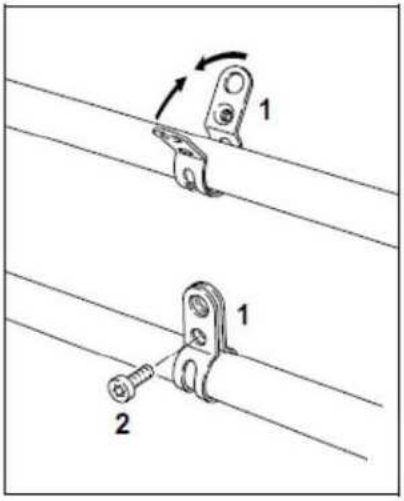

¡æInstall bracket (1) with left-hand thread onto the rod (user side).
¡æCompress and hold the bracket bars.
¡æInsert bolt (2) M6x14.
¡æAlign the hose clamp.
¡æTighten the bolt.
Reference: For hose clamp positioning, refer to "Important Components".

Installation of Protective Devices (FF85, FF120, FF200, FF250, FF280)

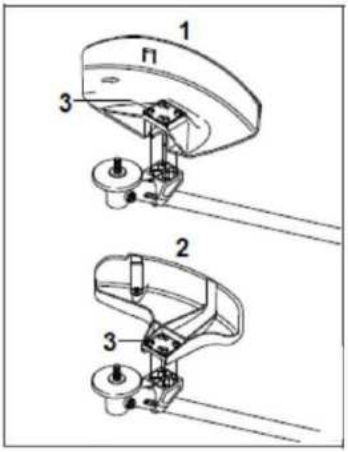

1. Protection for Mowing Tool Guards
Install guard (1) onto the drive unit.
Insert and tighten bolts (3).

2. Protection for Mowing Heads
Install guards (1) and (2) onto the drive unit using the same method.
Insert and tighten bolts (3).

WARNING
¡æWhen using the trimmer head, all specified components must be installed on guard (1).
¡æPosition the lower guide slot of apron (4) onto guard rod (1) until secured.
¡æInsert blade (5) into the upper guide slot of the apron and fix it to the housing with the first mounting hole.
¡æTighten bolts.

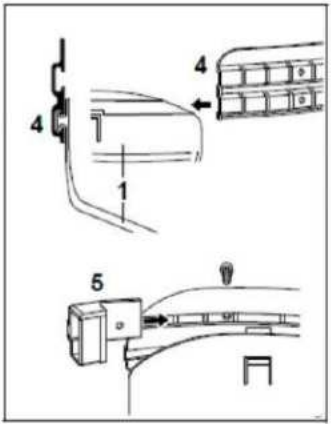

Stop Assembly Installation

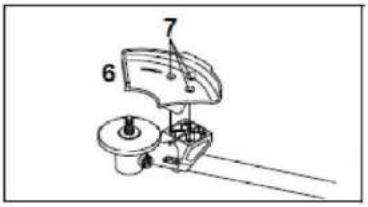

WARNING: The stop (6) must be installed when using saw blades.

Installation Steps
¡æPosition the stop (6) on the gearbox flange.
¡æInsert and tighten bolts (7).

Installation of Protective Devices (FF143RII/PRO, FF226R/PRO, FF541R/PRO)

Install or remove the accessory guard assembly based on tool type: install when using trimming heads or plastic blades, remove when using grass blades.

To install, insert the guard rail into the slot on the cutting device guard and secure four locking clips; to remove, use a screwdriver to detach the locking clips.

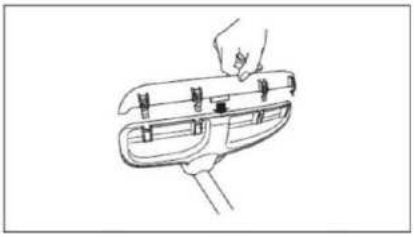

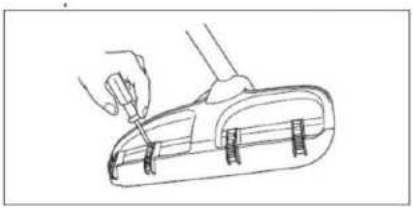

PROTECTIVE DEVICE INSTALLATION GUIDE

Protective Device Assembly

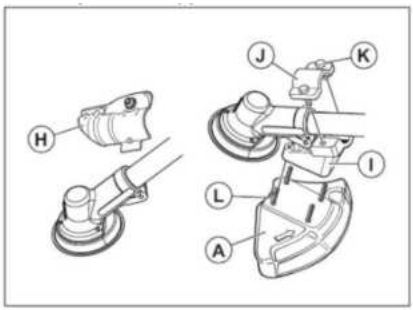

¡æRemove bracket (H)

¡æMount adapter (J) and bracket (K) with 2 screws

¡æAttach trimmer guard (A) to plate using 2 holes

¡æInsert locking pin/hex key (C) into shaft locking hole

Blade Guard Installation

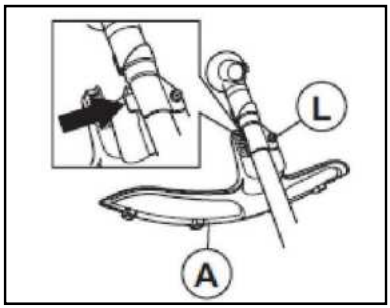

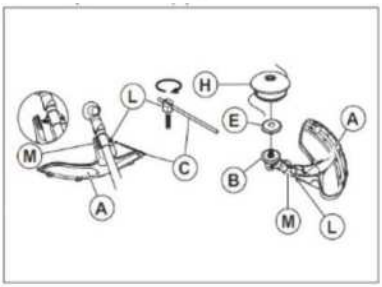

¡æSecure blade guard (A) to adapter with 4 bolts (L)

¡æTighten using locking pin/hex key (C)

¡æInstall drive disk (B) and support flange (E) on output shaft

¡æRotate shaft until drive disk hole aligns with gearbox hole

¡æFix blade guard to shaft with bolts (L)

Final Assembly

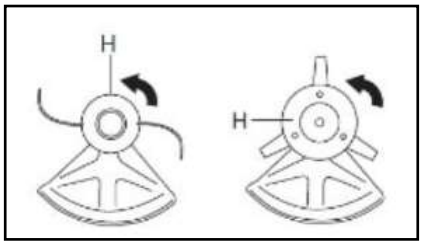

¡æInstall trimmer head/trimmer blade (H) by clockwise rotation
¡æFor removal: Reverse installation sequence

GUARD ATTACHMENT:

Select appropriate trimmer guard (A) for trimmer head/trimmer blade

HANDLE BAR INSTALLATION GUIDE (FF55/ FF55E/ FF55R)

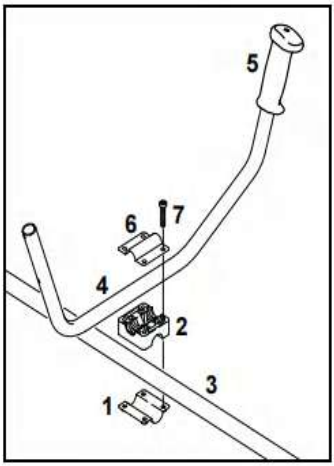

¡æInstall clamp bracket (1) and handle bar bracket (2) onto shaft (3)
¡æInsert tubular handle bar (4) into bracket, ensuring rubber grip (5) faces left side (viewed from engine toward handle bar)
¡æPosition upper clamp bracket (6) over handle bar bracket
¡æSecure components by inserting bolt (7) through aligned holes

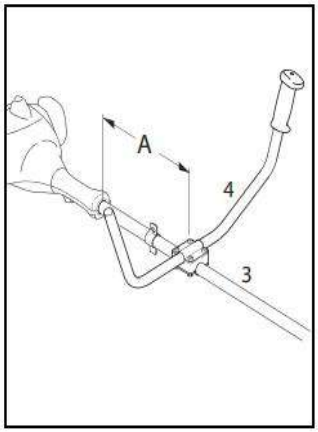

¡æMount handle bar (4) on shaft 15cm (6") forward from engine
¡æAlign handle bar and tighten mounting bolts

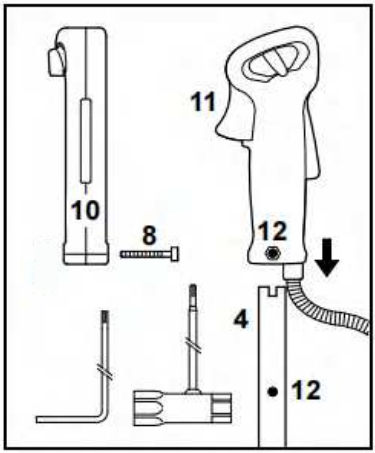

¡æRemove bolt (8) using combination wrench/screwdriver (retain nut (9) in control handle bar (10))
¡æAttach control handle to handle bar (4) with throttle lever (11) facing transmission
¡æAlign hole (12) and secure with bolt (8)
¡æTighten cable clamp simultaneously

THROTTLE CABLE MOUNTING GUIDE

INDICATION:Avoid sharp bends in throttle cable routing - throttle lever must move freely

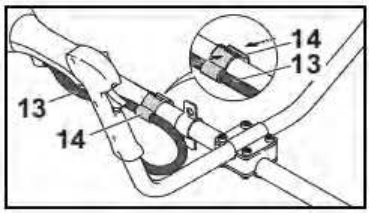

¡æInstall throttle cable holder (13) & cable on shaft
¡æCompress accelerator cable holder until (14) clicks into position
Install two-handle bar assembly

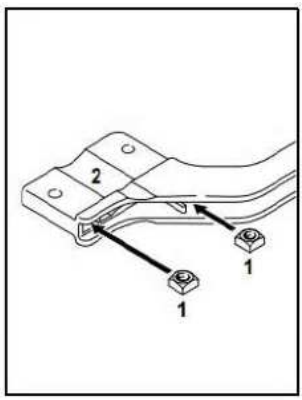

¡æAlign holes with four-sided nuts (1)

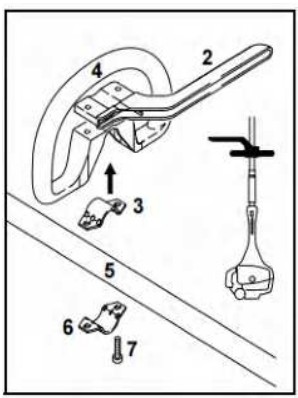

¡æInsert clamp (3) into circular handle bar (4)
¡æMount assembly onto shaft (5)
¡æInstall clamps (2) & (6) while maintaining position
¡æAlign housing holes
¡æInsert bolts (7) and tighten until flush
¡æComplete installation per circular handle bar procedure

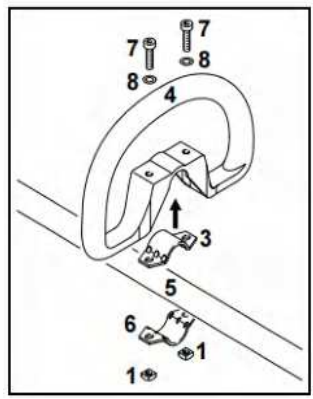

¡æInsert clamp (3) into circular handle bar (4) and mount assembly onto shaft (5)
¡æInstall clamp (6)
¡æAlign housing holes
¡æPlace washer (8) on bolt (7), insert into aligned holes and tighten with square nut (1)
¡æComplete installation per circular handle bar procedure

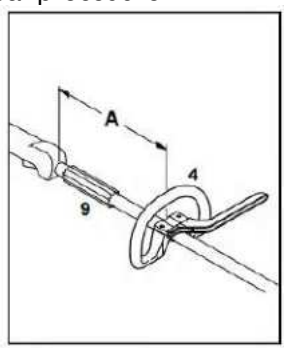

¡æAdjust distance (A) to position handle bar (4) (Recommended: 20cm/ 8")
¡æAlign handle bar (4) with shaft axis
¡æTighten bolt and secure nut if clamp is absent
COMPONENT NOTES:
Bushing (9) install between handle bar (4) and control unit
Load ring included in standard package or as special accessory

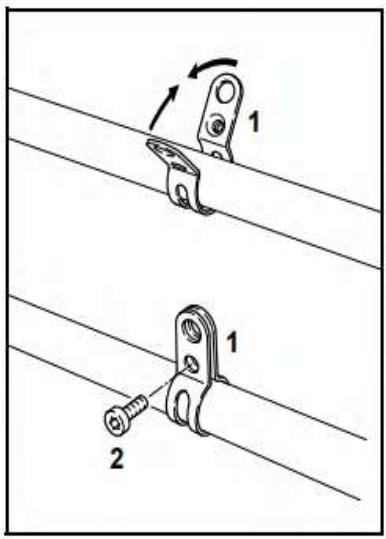

¡æInstall threaded clamp (1) on shaft left side (user-facing view)
¡æCompress and secure cushion clamp
¡æInsert bolt (2) M6x14
¡æAlign lifting eye
¡æTighten bolt to specification

PLASTIC CONSTRUCTION ASSEMBLY GUIDE

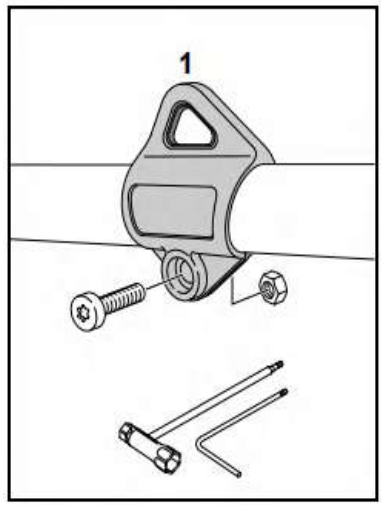

¡æPosition load-bearing hinge (1) on shaft
¡æInsert M5 nut into hex socket of hinge
¡æTighten M5x14 bolt with hex key
¡æAlign lifting eye (if applicable)
¡æVerify all bolts are secured

PROTECTIVE DEVICE INSTALLATION GUIDE (FF55/ FF55E/ FF55R)

Use correct protective shield type for each tool head

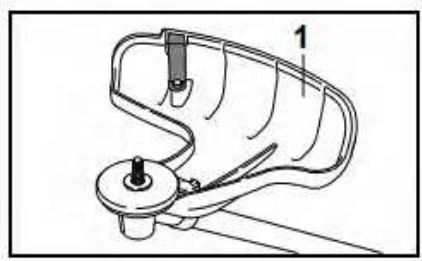

¡æApproved for trimmer head operations only
¡æMust be installed together with trimmer head
¡æInstallation sequence:
Mount shield (1) on shaft
Install trimmer head

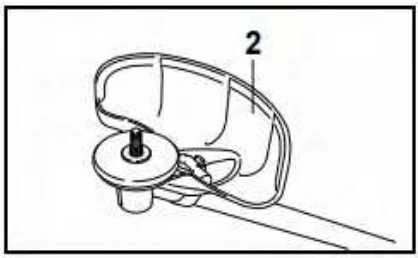

¡æApproved for mowing disc operations only
¡æMust be installed prior to mowing disc
¡æInstallation sequence:
Mount shield (2) on shaft
Install mowing disc

PROTECTIVE SHIELD INSTALLATION GUIDE

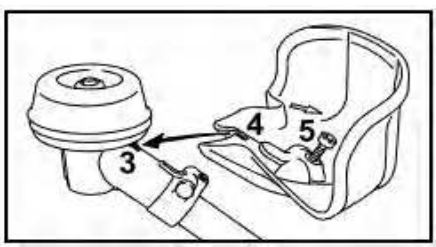

¡æInsert tab (3) on shield into slot (4) of transmission housing
¡æTighten fixing bolt (5)
¡æFor specific modifications: Use additional M5x14 bolt from delivery package
Protective shields (1) & (2) use identical mounting method

HANDLE BAR INSTALLATION GUIDE (FF400/FF450/FF480)

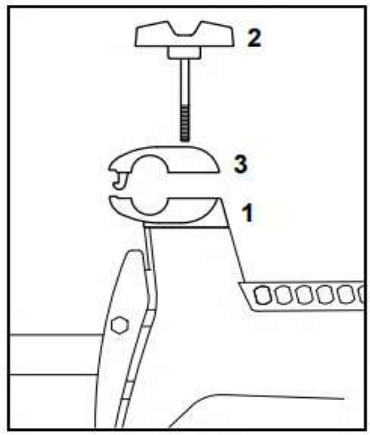

¡æHold lower clamp base (1)
¡æRemove clamp screw (2) to release locking mechanism
¡æRemove upper clamp assembly (3) from lower clamp base (1)

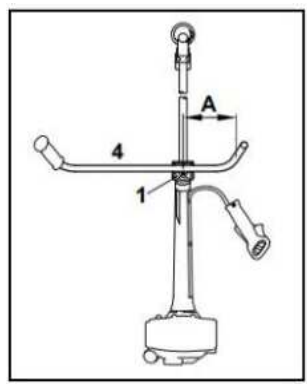

¡æInsert tubular handle bar (4) into base (1) (Max. distance A=15cm)
¡æReinstall upper clamp assembly (3) with screw (N)
¡æAdjust handle bar laterally by pressing clamp surfaces
¡æTighten clamp screw against shaft

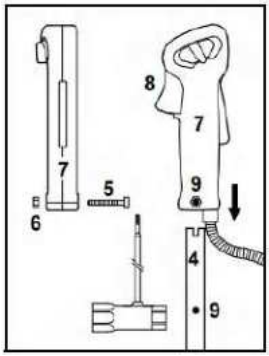

¡æRemove screw (5) (Retain nut in control handle (7))
¡æInstall control handle with fuel lever (8) facing transmission until holes (9) align
¡æTighten to N·m torque specification
¡æAdjust fault cable
¡æAdjust throttle control cable
STORAGE MODE: Loosen clamp screw, fold handle bar parallel to shaft, rotate downward

THROTTLE CONTROL CABLE ADJUSTMENT GUIDE (FF400/FF450/FF480)

APPLICABLE EQUIPMENT:
Throttle control cable adjustable on working handle bar
Correct adjustment ensures proper start/idle/full-throttle operation
ADJUSTMENT PROCEDURE:
Adjust only when fully assembled with handle bar in working position
Depress handle lock using tool

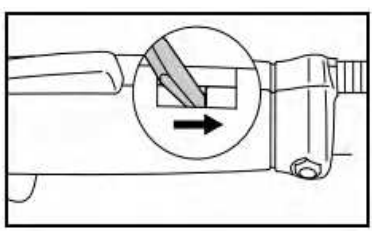

Fully press fuel lever (1) and rod (2) to " Full Throttle" position

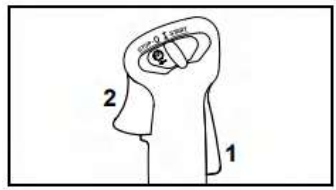

PROTECTIVE SHIELD INSTALLATION

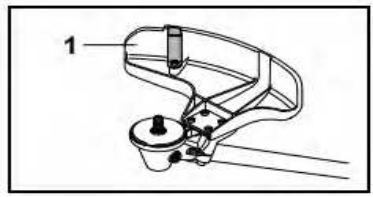

Shield (1):
WARNING: For trimmer head operations exclusively

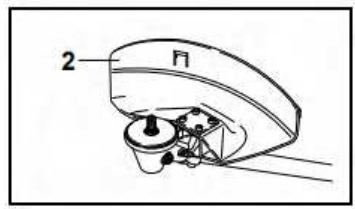

Mandatory installation before attaching trimmer head
Shield (2):
WARNING: For mowing blades & brush cutter blades only

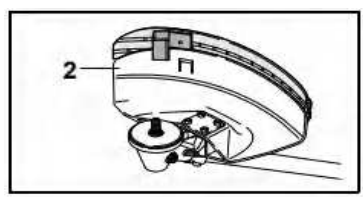

Permitted for trimmer heads ONLY with apron/blade kit installed

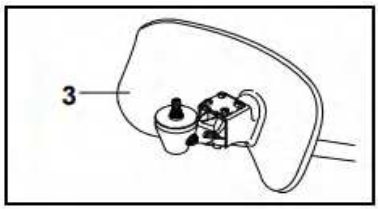

WARNING

Guard (3): For mulching blades only - must be installed before blade mounting

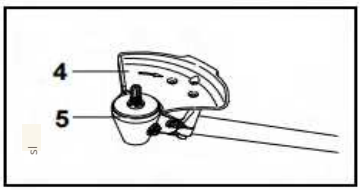

WARNING

Stop (4): For saw blades only - install stop (4) & replace protective ring (5) before operation

PROTECTIVE SHIELD INSTALLATION

Mount protections (1-4) uniformly on gearbox

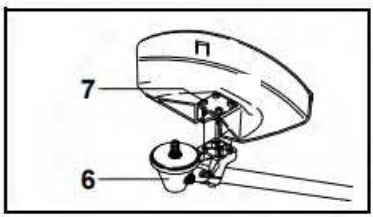

Clean gearbox joints before installation - prevent debris in threaded holes

¡æRemove old protection from gearbox (6)

¡ædInstall new protection (6)

¡ædInsert and tighten bolts (7)

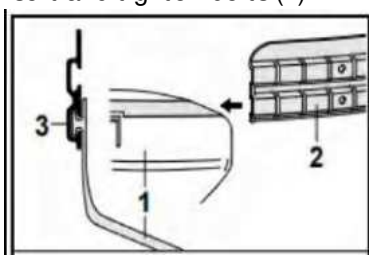

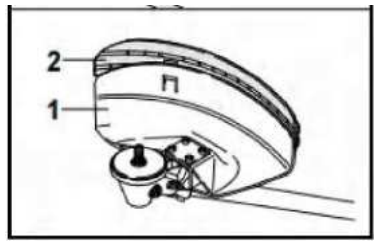

¡æEquip metal mowing tool guard (1) with apron (2) during mowing head assembly

¡æSecure apron (2) by installing lower guide rail (3) onto guard bar (1)

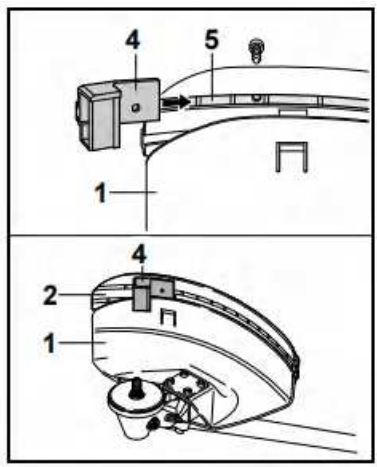

¡ædInstall blade (4) onto metal mowing tool (1)

¡ædInsert blade (4) into upper clamp slot (5) of guard plate (2)

¡æAlign blade with first fixing hole on housing

¡æTighten mounting bolts

CUTTING TOOL INSTALLATION GUIDE

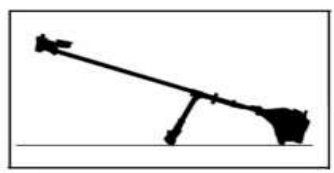

SAFETY PREPARATION:

¡æStop engine before installation

¡æPosition unit with tool mounting surface upward

FASTENING PARTS FOR CUTTING TOOLS

Fastener quantities vary based on initial equipment configuration INSTALLATION REQUIREMENTS:

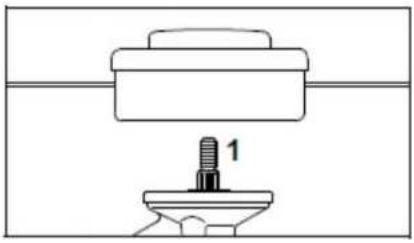

Only shaft-mounted (1) mowing heads are compatible

FASTENING COMPONENTS DELIVERY SCOPE

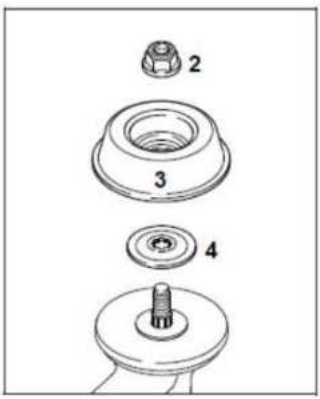

Mowing heads and metal cutting tools require additional fastening components based on tool design specifications: nut (2), adjusting disk (3), and thrust washer (4). These components are included in the standard accessory kit or available as special order items.

SHAFT LOCK OPERATION GUIDE

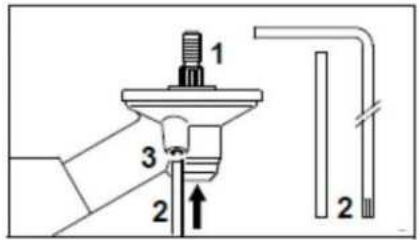

LOCKING PROCEDURE:

¡æInsert locking rod/curved screwdriver (2) fully into drive housing hole (3)

¡æApply light shaft pressure while rotating nut until lock engagement

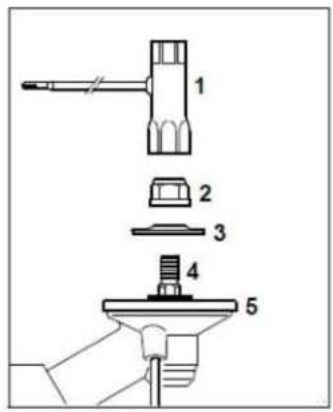

UNLOCKING PROCEDURE:

¡æUse combination wrench (1) to rotate left-hand thread nut (2) clockwise

¡æRemove high-pressure washer (3) from shaft (4) - retain pressure plate

COMPONENT NOTES:

Locking tools (2) included in standard package or available as special accessories

Maintain shaft (1) alignment during operations

THREADED TRIMMER HEAD INSTALLATION GUIDE

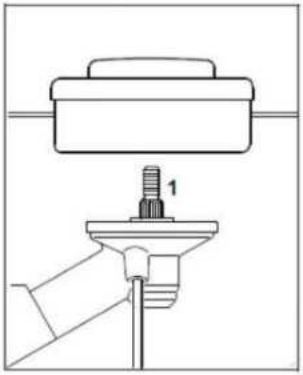

¡æRotate trimmer head (1) counter-clockwise until contacting shaft
¡æLock shaft with dedicated tool
¡æTighten trimmer head fully
¡æRemove shaft locking tool after completion

REMOVAL

Engage shaft lock with tool
Rotate trimmer head clockwise for disengagement

METAL CUTTER WARNING:

Always wear protective gloves
Install only one metal cutting tool at a time

CUTTING TOOL INSTALLATION GUIDE

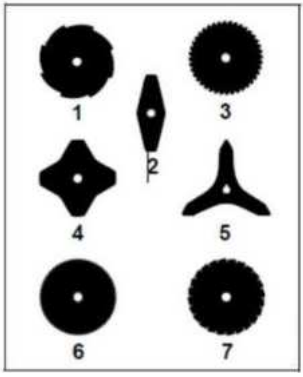

¡æTools with 2/3/4 blades (2,4,5): Install in any orientation, rotate periodically to prevent unilateral wear
¡æTools with cutting edges (1,3,6,7): Align edges clockwise
WARNING:Follow rotation direction marked by guard inner arrow

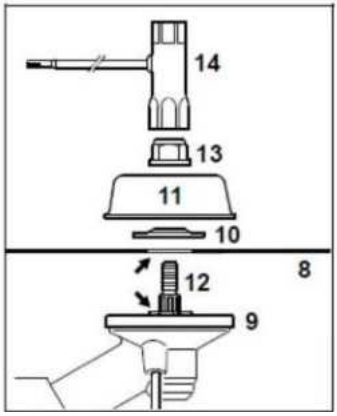

MOUNTING PROCEDURE:
Place cutting tool (8) on clamp disk (9)
Assemble components (10-14) as per tool configuration

METAL CUTTER INSTALLATION & REMOVAL GUIDE

¡æInstall thrust washer (10) with convex side upward
¡æMount adjusting disk
¡æLock shaft using combination wrench (14).Secure nut (13) counterclockwise

WARNINGS:

Replace loose nuts immediately
Remove shaft locking tool after installation

REMOVAL PROCEDURE:

¡æWear cut-resistant gloves
¡æRotate nut clockwise to disengage
¡æRemove cutter & fasteners from transmission housing
Retain clamp disk (9)

FUEL SPECIFICATION GUIDE

FUEL REQUIREMENTS:

¡æUse gasoline/2-stroke oil mixture for air-cooled 2-stroke engines

¡æAvoid direct contact with fuel and vapor inhalation

¡æProhibited: 2-stroke oils for water-cooled engines or 4-stroke engines

RECOMMEND

Use only high-quality brand-name gasoline with a minimum octane rating of 90 ¤Cleaded or unleaded.

Warning: Substandard fuels/oils may damage engine components (seals, fuel lines, tank)

MIXING RATIOS

High-quality brand-name oils: 1:30
(30 parts gasoline to 1 part oil)

amount of gasoline	High-quality brand-name: 1:30	
Liters	**Liters**	**ml**
1	0,025	25
5	0,125	125
10	0,25	250
15	0,375	375
20	0,5	500
25	0,625	625

REFUELING OPERATION GUIDE



PREPARATION STEPS:

¡æClean fuel cap and adjacent surfaces before refueling

¡æPrepare fuel mixture in approved container:

Add oil first, then gasoline
Mix thoroughly

FUEL STORAGE

¡æStore mixture only in certified fuel containers

¡æKeep in dry, secure location (avoid light/direct sunlight)

¡æMaximum storage duration: 14 days

¡æTemperature extremes accelerate degradation

REFUELING PROCEDURE

¡æShake fuel container vigorously before use

¡æOpen container cautiously - pressure may build up

¡æClean fuel tank and containers regularly

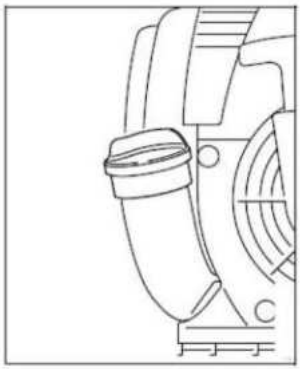

¡æPosition unit with fuel cap upward
¡æOpen fuel cap immediately
¡æRefuel tank completely
¡æSecurely close fuel cap

WARNING

¡æMaintain fuel containment during refueling and avoid filling beyond 95% capacity
¡æAfter refueling:
Manually tighten fuel tank cap clockwise until firm resistance
Confirm seal engagement through visual alignment marks

SUSPENSION STRAP POSITIONING GUIDE

Strap types and specifications vary by regional market requirements

SINGLE-SHOULDER STRAP:

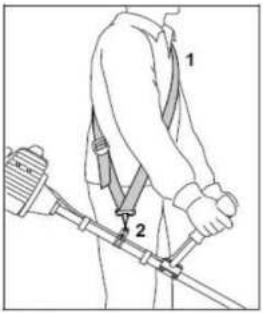

¡æInstall strap (1)
¡æAdjust length until hook (2) aligns one palm-width below thigh
¡æBalance unit

TWO-SHOULDER STRAP:

Install straps (1) and secure locking plate (3)
Adjust to proper length

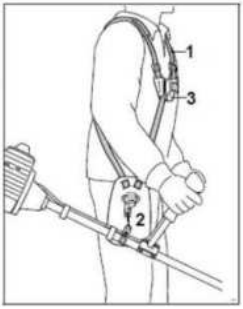

COMPONENT POSITIONING: During suspension, ensure hook (2) maintains hand-width clearance under thigh

UNIT SUSPENSION & DETACHMENT GUIDE

Attach carabiner (1) to lifting ring (2) on shaft
Strap configurations vary by regional markets

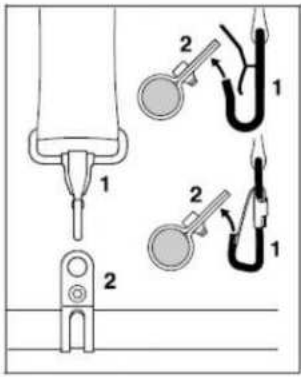

DETACHMENT PROCEDURE

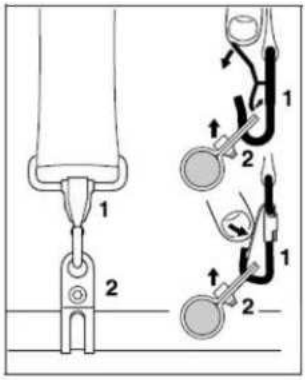

Press release tab and extract pin (1)
Remove carrying ring (2) from hook assembly

COMPONENT NOTES:

Ensure carabiner (1) and lifting ring (2) maintain full engagement during suspension

QUICK-RELEASE SYSTEM OPERATION GUIDE

WARNING:

Activate quick-release immediately during critical hazards

Conduct training drills without dropping unit (avoid ground impact)

OPERATION PROCEDURES:

Single-shoulder strap: Practice harness detachment from shoulder

Two-shoulder strap: Train rapid buckle plate disengagement & harness removal

REFERENCE:Follow "Unit Detachment from Suspension Strap" chapter for detailed steps

UNIT BALANCING GUIDE

Warning: Always suspend unit on rigging during operation

Damaged quick-release locks are prohibited

LOAD DISTRIBUTION ADJUSTMENT



Tighten side straps to evenly distribute shoulder load

Adjust tool position for optimal operation

HEIGHT ALIGNMENT



Set shoulder straps until cutting unit is parallel to ground

PROPER BALANCE



Lower cutter to ground contact & adjust suspension point for balance

ENGINE START/ STOP CONTROL GUIDE (FF85/ FF120/ FF200/ FF250/ FF280)CONTROL ELEMENTS:

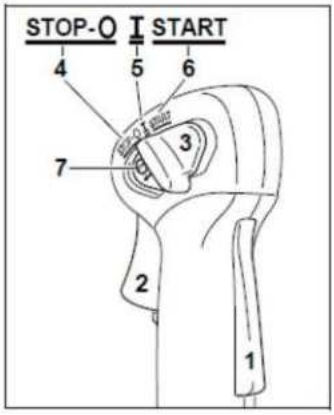

Throttle trigger interlock(1)

Throttle trigger (2)

Slide control (3)

STOP - 0: – engine off – the ignition is switched of

I – normal run position (5) – the engine is running or can start

START (6) - the ignition is switched on, the engine can start

(7) – stop symbol and arrow – to stopthe engine, push the slide control in direction of arrow on stop symbol ( ) to STOP-O.

START PROCEDURE

Hold the throttle trigger interlock and pull the throttle trigger.
While keeping these two levers in this position, move the slide control to " START" and hold it in that position.
Now release the throttle trigger, slide control, and trigger interlock in that order. This is the starting throttle position.

AIR DAMPER SETTINGS:

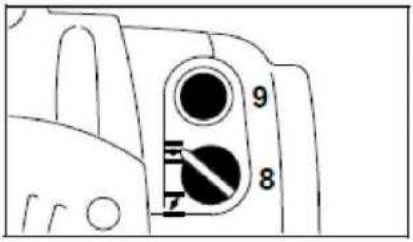

Adjust damper knob (8):
Cold engine: Initial position
Warm engine: Intermediate position
Press fuel pump bulb (9) at least five times – even if the bulb is already filled with fuel.

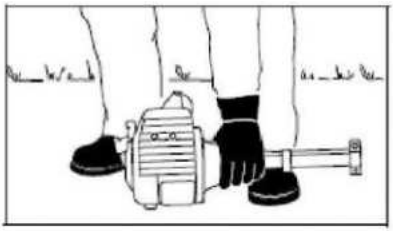



START - UP OPERATION INSTRUCTIONS

¡æPlace the machine firmly on the ground, ensuring that the engine support and the cutting tool guard form a stable support surface.

¡æIf the cutting tool has a transport shield, remove it. The cutting tool should never touch the ground or any object to avoid accident risks.

¡æYou can stand, bend over, or kneel on one knee.

¡æUse your left hand to firmly hold the machine against the ground, avoiding contact with the throttle lever, throttle switch, or combined switch.

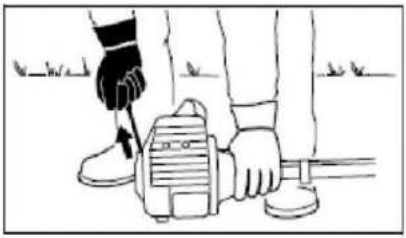

¡æDo not place your feet on the shaft or kneel on the shaft.

¡æGrasp the starting handle with your right hand.

¡æPull the starting handle slowly until the first distinct pause, then pull it quickly and forcefully.

¡æDo not pull the starting cord out completely to avoid the risk of breakage.

¡æDo not let the starting handle snap back quickly. Instead, guide it back slowly in the opposite direction of the pull so that the starting cord can wind correctly.

¡æContinue the starting operation.

IGNITION PROCEDURE:

¡æTurn choke knob to "e" position and continue pulling starter handle

¡æImmediately tap throttle trigger to move slide control to operational position I (idle speed)

¡æEnsure carburetor is properly adjusted.Cutting tool must rotate at idle (operational readiness confirmed)

ENGINE STOP

Push slide control along " STOP " arrow direction to stop

COLD WEATHER OPERATION

After engine starts:

¡æTap throttle trigger to disengage starting position

¡æMove slide control to position I (idle)

¡æSlightly open throttle

¡æAllow brief warm-up

START FAILURE PROTOCOL

Flooded combustion chamber prevention:

¡æTurn choke knob to "e" immediately if ignition delay occurs

¡æSelect starting throttle position

¡æPull starter cord forcefully (10-20 pulls required)

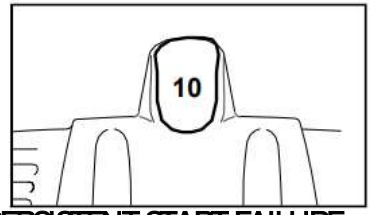

PERSISTENT START FAILURE:

¡æMove slide control to "STOP-0"

¡æDisconnect spark plug boot (10)

¡æRemove and dry spark plug ¡œFully open throttle

¡æPull starter 5-6 times to clear combustion chamber

¡æReinstall spark plug ¡œSecurely reconnect boot

¡æMove slide control to "START"

¡æSet choke knob to "e" if engine is cold

¡æRestart engine

THROTTLE CABLE ADJUSTMENT:

Verify throttle cable tension (Refer to " THROTTLE CABLE" chapter)

POST-REFUELING PROCEDURE:

¡æPress primer bulb 5 times minimum after refueling

¡æSet choke knob according to engine temperature

¡æRestart engine

ENGINE START/STOP PROCEDURE (FF143RII/PRO, FF226R/PRO, FF541R/PRO)

COLD START SEQUENCE:

¡æSet switch to START position

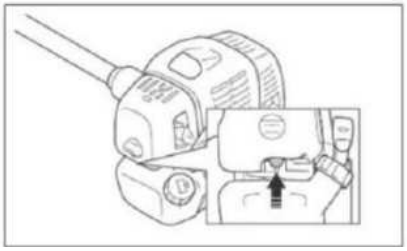

¡æPress primer bulb until fuel flow initiates

¡æClose choke lever fully

¡æMaintain unit in horizontal position

Starter rope operation:

¡æPull starter handle slowly with right hand until resistance is felt

¡æThen pull rapidly [WARNING: Never wrap starter cord around hand]

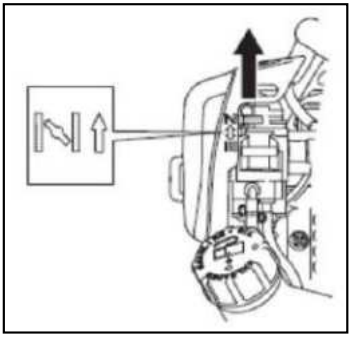

Post-ignition adjustment:

¡æReturn choke lever to initial position after ignition attempt

¡æRepeat start attempts until engine runs

¡æFully open throttle upon startup (auto-choke disengages)

WARNING

Do NOT pull or release the starter handle when the cord is fully extended

Risk of unit damage from improper cord handling

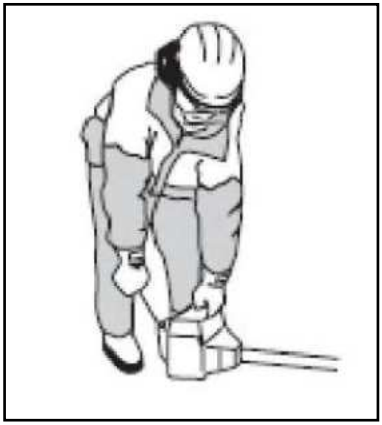

WARNING
Keep body parts clear of marked surfaces
Damaged covers may cause burns/ electric shock
Mandatory: Use work gloves
Prohibited: Operating units with compromised covers

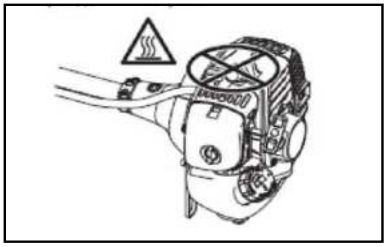

THROTTLE HANDLE OPERATION GUIDE

Engagement sequence:
Press throttle lock & adjuster simultaneously
Depress button (A) ¡ce Release adjuster ¡ce Release button (A)
Applies to new units after 3rd refueling under no-load/high RPM operation

BREAK-IN PERIOD REQUIREMENTS:
Avoid component replacement during break-in (0-3 refueling cycles)
Increased inter-component friction expected

IDLE MODE SWITCH:
Start sequence activated
Press throttle lock & adjuster to return to idle

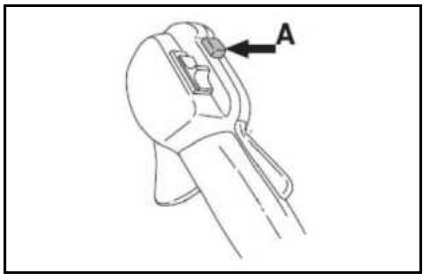

SHUTDOWN PROCEDURE

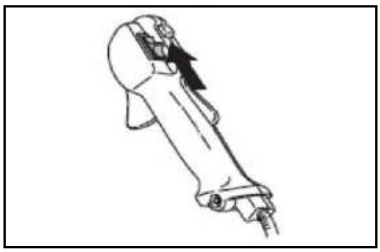

Move throttle lever to idle
Turn switch to STOP

OPERATIONAL NOTES
Maximum power achieved after 5-15 refueling cyclesPost full-load overheating:
a) Run engine briefly for heat dissipation
b) Introduce cold air intake

Start / stop Engine (FF55 FF55E FF55R)

Elements control

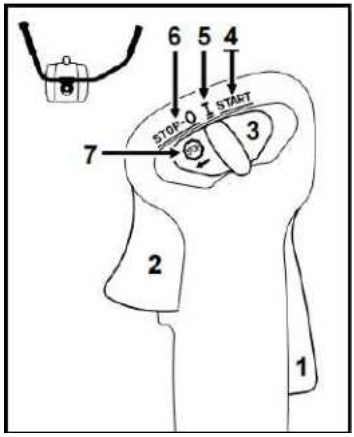

1 Throttle trigger lock-out
2 Throttle trigger
3 Slide control
Positions of slide control
4 START - the ignition is switched on - the engine can start
5 I - normal run position - the engine is running or can start
6 STOP-0 - engine off - the ignition is switched off
Symbol on slide control
7 - stop symbol and arrow. To stop the engine, push the slide control in the direction of the arrow on the stop symbol ( ) to STOP-0.
Starting
¡æ Press down the trigger lockout lever and squeeze the throttle trigger.
¡æ and hold them in that position.
¡æ Move the slide control to START and hold it there.
¡æ Now release the throttle trigger, slide control and trigger lockout in that order. This is the starting throttle position.
¡æ Go to "All versions".

Version with loop handle

Controls

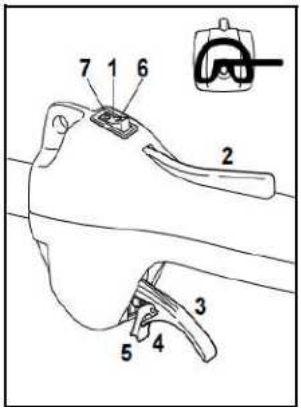

1 Stop switch
2 Throttle trigger lockout
3 Throttle trigger
4 Tongue of throttle trigger
5 Catch
Positions of stop switch
6 I¡C normal run position ¤C the engine can start or is running
7 0-Stop ¤C engine off ¤C the ignition is switched off
Starting

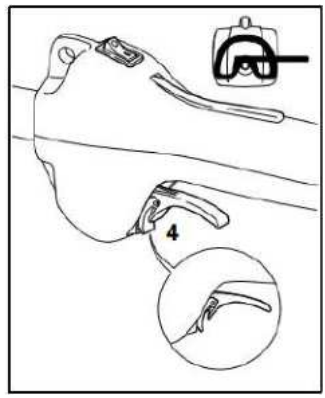

¡æ Move the stop switch to I .
¡æ Press down the throttle trigger lockout and hold it there.
¡æ Squeeze the throttle trigger until the catch on the tongue (4) can be engaged on the housing.
¡æ Now release the throttle trigger, tongue and trigger lockout in that order. This is the starting throttle position.
¡æ Go to "All versions".

All versions

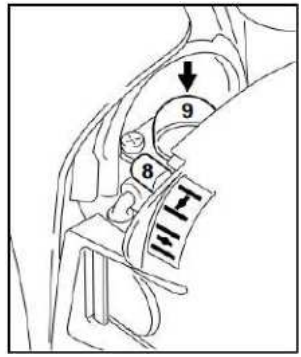

Set the choke lever (8) to
 if the engine is cold
 for warm start – also use this pos ition if the engine has been running b ut is still cold.
Press the fuel pump bulb (9) at least five times – even if the bulb is alread y filled with fuel.

Starting

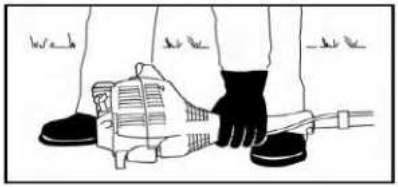



¡æ Place the unit on the ground: It must rest securely on the engine support and the deflector. Check that the cutting attachment is not touching the ground or any other obstacles.
¡æ Make sure you have a safe and secure footing.
¡æ Hold the unit with your left hand and press it down firmly ¤C your thumb should be under the fan housing.
Do not stand or kneel on the drive tube.

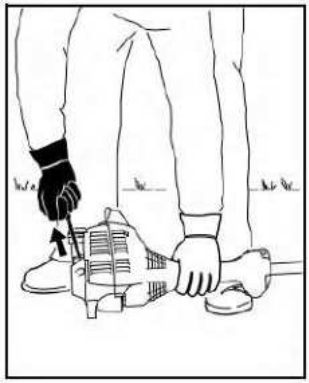

¡æ Hold the starter grip with your right hand.

Version without Easy Start
¡æ Pull the starter grip slowly until you feel it engage and then give it a brisk strong pull.Do not pull out the starter rope all the way ¤C it might otherwise break.

Version with Easy Start
¡æ Pull the starter grip slowly until you feel it engage and then pull it out slowly and steadily.
Do not pull out the starter rope all the way ¤C it might otherwise break.

Both versions
¡æ Do not let the starter grip snap back. Guide it slowly back into the housing so that the starter rope can rewind properly.

When the engine begins to fire

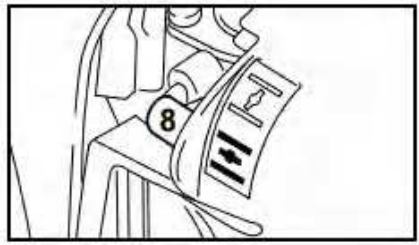

¡æ After no more than five pulls, move the choke lever (8) to .
¡æ Continue cranking.
As soon as the engine runs
Version with bike handle
¡æ Blip the throttle trigger ¤C the engine settles down to idle speed.
Version with loop handle
¡æ Squeeze the throttle trigger to disengage the tongue ¤C the engine will settle down to idle speed.
Your machine is now ready for operation.
Make sure the carburetor is correctly adjusted. The cutting attachment must not rotate when the engine is idling.

Stopping the engine

¡æMove the slide control in direction of the arrow ( ) to STOP-0 or the stop switch to STOP / 0.

If the engine does not start

Choke lever

If you did not move the choke lever to quickly enough after the engine began to fire, the combustion chamber is flooded.

¡æSet the choke lever to

¡æSet the slide control, trigger lockout lever and throttle trigger to the starting throttle position.

¡æStart the engine by pulling the starter rope briskly ¤C 10 to 20 pulls may be necessary.

If the engine still does not start

¡æMove the slide control or stop switch to STOP / 0.

¡æRemove the spark plug ¤C see "Spark Plug".

¡æDry the spark plug.

¡æCrank the engine several times with the starter to clear the combustion chamber.

¡æRefit the spark plug ¤C see "Spark Plug".

¡æMove the slide control or stop switch to I / I.

¡æSet the choke lever to ¤C even if the engine is cold.

¡æNow start the engine.

Fuel tank run until completely dry

¡æAfter refueling, press the fuel pump bulb at least five times ¤C even if the bulb is filled with fuel.

¡æSet the choke lever to suit the engine temperature.

¡æStart the engine.

Start / stop the engine FF400, FF450, FF480

Control Elements

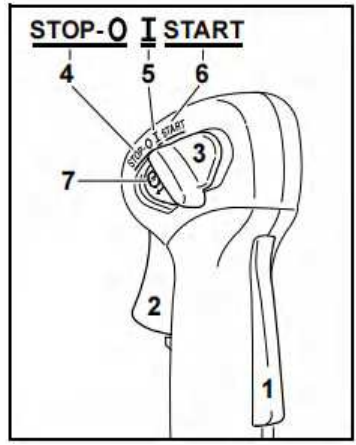

1 Throttle trigger lockout
2 Throttle trigger
3 Slide control
Positions of slide control
4 STOP-0 ¤C engine off ¤C ignition is switched off
5 I ¤Cnormal run position ¤C the engine is running or can start
6 START ¤C ignition is switched on ¤C the engine can start

Symbol on slide control

7 ¤C stop symbol and arrow. To stop the engine, push the slide control in the direction of the arrow on the stop symbol ( ) to STOP-0.

Starting

¡æ Press down the trigger lockout lever and squeeze the throttle trigger

¡æ and hold them in that position.

¡æ Move the slide control to START and hold it there.

¡æ Now release the throttle trigger, slide control and trigger lockout in that order. This is the starting throttle position.

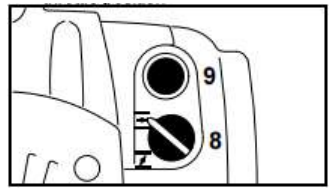

¡æ Set the choke knob (8)
I if the engine is cold
⊟ for warm start ¤C also use this position if the engine has been running but is still cold.
¡æ Press the manual fuel pump bulb (9) at least five times ¤C even if the bulb is filled with fuel.

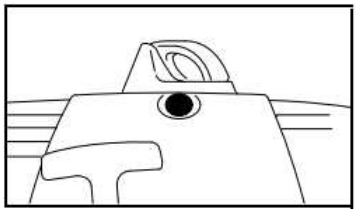

¡æ Press in the decompression valve button for each starting attempt.

Cranking

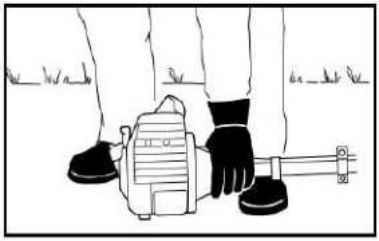

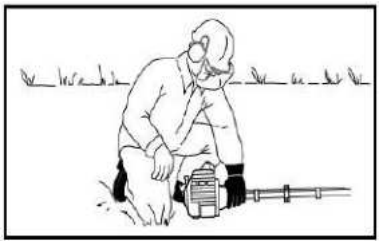

¡æ Place the unit on the ground: It must rest securely on the engine support and the detector. Check that the cutting attachment is not touching the ground or any other obstacles.
¡æ Make sure you have safe and secure footing.
¡æ Hold the unit firmly on the ground with your left hand and press down - do not touch the throttle trigger or lockout lever. Your thumb should be under the fan housing.

NOTICE
Do not stand or kneel on the drive tube

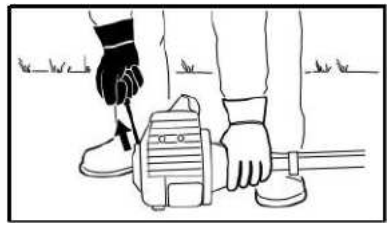

¡æ Hold the starter grip with your right hand
¡æ Pull the starter grip slowly until you feel it engage and then give it a brisk strong pull.
NOTICE: Do not pull out the starter rope all the way ¤C it might otherwise break.
¡æ Do not let the starter grip snap back. Guide it slowly back into the housing so that the starter rope can rewind properly
¡æ Continue cranking.

When engine begins to fire

¡æ Turn the choke knob to ⊟
¡æ Press in button to open the decompression valve.
¡æ Continue cranking until the engine runs.

As soon as the engine runs

¡æ Blip the throttle trigger immediately. The slide control moves to the normal run position I and the engine settles down to idle speed.

WARNING: Make sure the carburetor is correctly adjusted. The cutting attachment must not rotate when the engine is idling. The machine is now ready for operation.

Shut off the engine

¡æ Push the slide control in the direction of the arrow on the stop symbol (STOP) to STOP-0.

At very low outside temperatures

As soon as the engine runs:
¡æ Bip the throttle trigger to disengage the starting throttle position. The slide control moves to the normal run position I and the engine settlements down to idle speed.

¡æ Open the throttle slightly.
¡æ Warm up the engine for a short period.

If engine does not start

Choke knob - If you did not turn the choke knob to ⇄ quickly enough after the engine began to fire, the combustion chamber is flooded.
¡æ Turn the choke knob to ⇄.
¡æ Select the starting throttle position.
¡æ Start the engine by pulling the starter rope briskly ¤C 10 to 20 pulls may be necessary.

If the engine still does not start

¡æ Move the slide control to STOP-0.
¡æ Remove the spark plug ¤C see " Spark Plug".
¡æ Dry the spark plug.
¡æ Open the throttle wide and hold it that position.
¡æ Crank the engine several times with the starter to clear the combustion chamber.
¡æ Refit the spark plug ¤C see "Spark Plug".
¡æ Move the slide control to START.
¡æ Set the choke knob to ⇄ ¤C even if the engine is cold.
¡æ Start the engine.

Throttle cable adjustment

¡æ Check adjustment of throttle cable ¤C see chapter on "Adjusting the Throttle Cable".

Fuel tank run until completely dry

¡æ After refueling, press the manual fuel pump bulb at least five times ¤C even if the bulb is filled with fuel.
¡æ Set the choke knob according to engine temperature.
¡æ Start the engine.

Operating Instructions

INITIAL COMMISSIONING

New units (factory-fresh) must avoid high-speed no-load operation during break-in period (0-3 refueling cycles) Increased inter-component friction occurs as parts wear in
Engine reaches maximum power after 5-15 refueling cycles

DURING OPERATION

Prevents thermal stress on drive components (ignition/carburetor)

POST-OPERATION HANDLING:

For short-term shutdown, allow the unit to cool completely and store fueled equipment in a dry area away from ignition sources. For extended storage periods, refer to the " Equipment Storage" chapter to ensure proper preservation protocols.

Air filter

Perform maintenance when engine power drops significantly

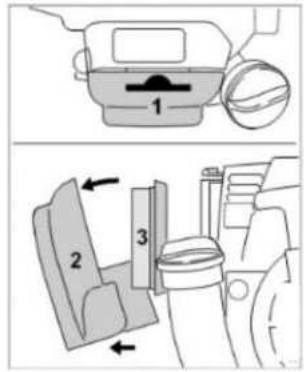

¡æ Remove Air Filter Cover:
Press lever (1) ¡œ Detach cover (2)

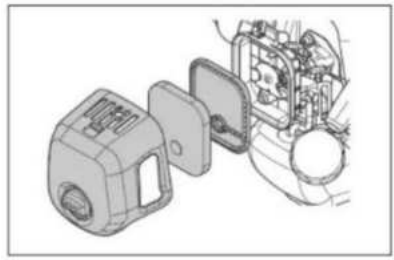

¡æ Clean Components:
Wipe inner surfaces of cover and surrounding area of filter (3)
Remove coarse contaminants
¡æ Inspect & Replace Filter:
Extract filter for inspection ¡ç Replace if soiled/damaged
¡æ Reinstall Filter:
Insert filter into cover assembly

CARBURETOR ADJUSTMENT

BASIC INFORMATION:
¡æ Carburetor preset to factory-standard mixture ratio
¡æ Optimized for ideal fuel-air mixture across operating conditions
¡æ WARNING: Excessively lean settings risk drive mechanism damage due to insufficient lubrication and overheating

ADJUSTMENT REQUIREMENTS

Contact certified HOLZFFORMA dealer for calibration

UNIT PREPARATION

¡æ Stop engine
¡æ Install cutting tool
¡æ Inspect air filter - Clean/replace if required
¡æ Verify throttle cable tension (Refer to "Throttle Cable Adjustment" chapter)

Spark plug

Replacement indicators:
Power loss / Hard starting / Unstable idle
Mandatory replacement after 100 operating hours (or severe electrode erosion)Use manufacturer-specified spark plugs

REMOVAL PROCEDURE

¡æ Stop engine

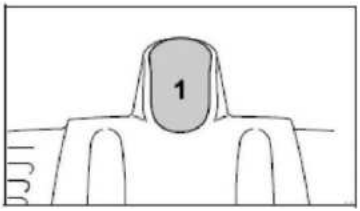

¡æ Detach spark plug boot (1)
¡æ Unscrew spark plug

INSPECTION

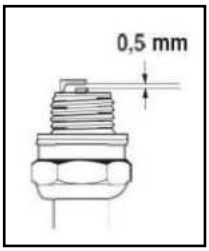

¡æ Clean contaminated plugs
¡æ Verify 0.5mm electrode gap ¡ç Adjust if necessary
¡æ Eliminate contamination sources

COMMON CONTAMINATION CAUSES

Excessive oil in fuel mixture
Clogged air filter
Harsh operating environments

INSTALLATION

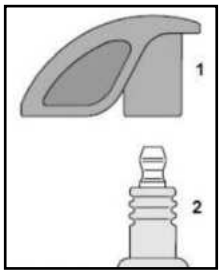

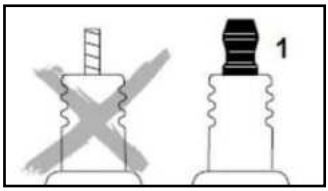

¡æ Hand-tighten spark plug (2)
¡æ Secure connector nut (1) firmly to prevent arcing and fire hazards

ENGINE PERFORMANCE

performance remains unsatisfactory after air filter cleaning and proper carburetor adjustment, contact authorized Holzfforma service centers
Holzfforma Advisory: Maintenance and repair must be performed exclusively by certified dealers

TRANSMISSION LUBRICATION PROCEDURE

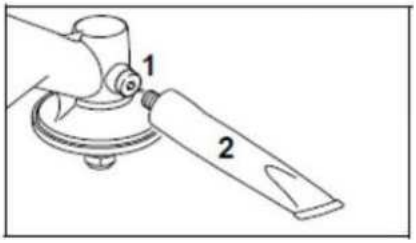

¡æ Remove threaded plug (1)
¡æ If no lubricant is present internally: Insert lubricant tube (2) into transmission housing
Inject 5g of grease
¡æ IMPORTANT: Do not overfill transmission housing

POST-LUBRICATION CHECK:

¡æ Remove lubricant tube (2)
¡æ Reinstall threaded plug (1) and tighten securely

Equipment Storage

LONG-TERM STORAGE PROTOCOL (3+ MONTHS)
FUEL SYSTEM PREPARATION:
¡æ Drain and clean fuel tank in ventilated area
¡æ Dispose fuel per environmental regulations
¡æ Fully drain carburetor to prevent diaphragm adhesion

CUTTING TOOL MAINTENANCE

¡æ Remove, clean, and inspect cutting tool
¡æ Apply protective oil to metal surfaces

ADDITIONAL REQUIREMENTS

¡æ Thoroughly clean all surfaces
¡æ Clean/replace air filter

STORAGE CONDITIONS

¡æ Store in dry, secure location
¡æ Prevent unauthorized access (e.g., children)

METAL CUTTING TOOL SHARPENING

¡æ Minor wear (e.g., small nicks): Sharpen with file (special accessory)
¡æ Excessive wear: Use professional grinding equipment or service
¡æ Perform frequent sharpening with minimal material removal
Typical requirement: 2-3 filing passes
¡æ Grind cutting edge (1) uniformly without altering blade body (2) shape

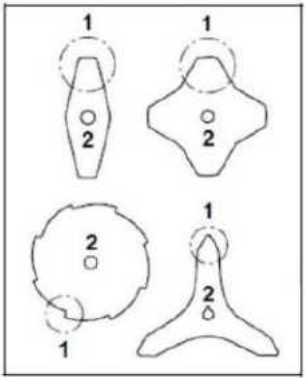

BALANCE PROTOCOL:

¡æ Maximum 5 sharpening cycles permitted
¡æ After 5 cycles:Check imbalance with dynamic balance tester

MOWING HEAD MAINTENANCE GUIDE

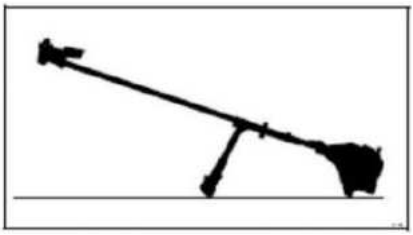

¡æ Stop engine

¡æ Position unit with cutting tool mounting upward

TRIMMER LINE REPLACEMENT

¡æ Pre-check: Inspect trimmer head for wear before line replacement

¡æ Critical wear: Replace entire trimmer head if significant damage is detected

¡æ Line handling: Use manufacturer-approved trimmer line (abbreviated as "line" hereafter)

WARNING: Dismantle mowing head only if necessary

TRIMMER HEAD ADJUSTMENT GUIDE

¡æ Maintain trimmer head 3-5cm above turf surface during operation

¡æ Ensure continuous rotation without ground contact

¡æ Lightly tap trimmer head on ground to activate guard-mounted blade

¡æ Auto-trim system cuts line to optimal length per ground contact

¡æ WARNING: Excessive tapping causes premature line consumption

¡æ Supplementary trimming permitted only when both line ends have minimum 2.5cm residual length

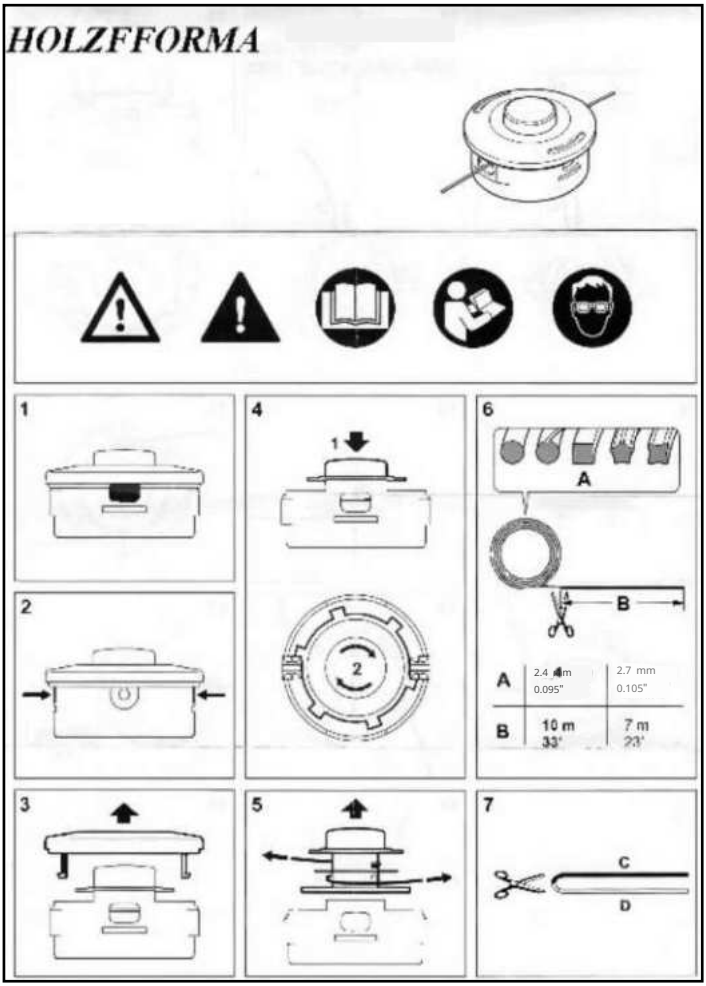

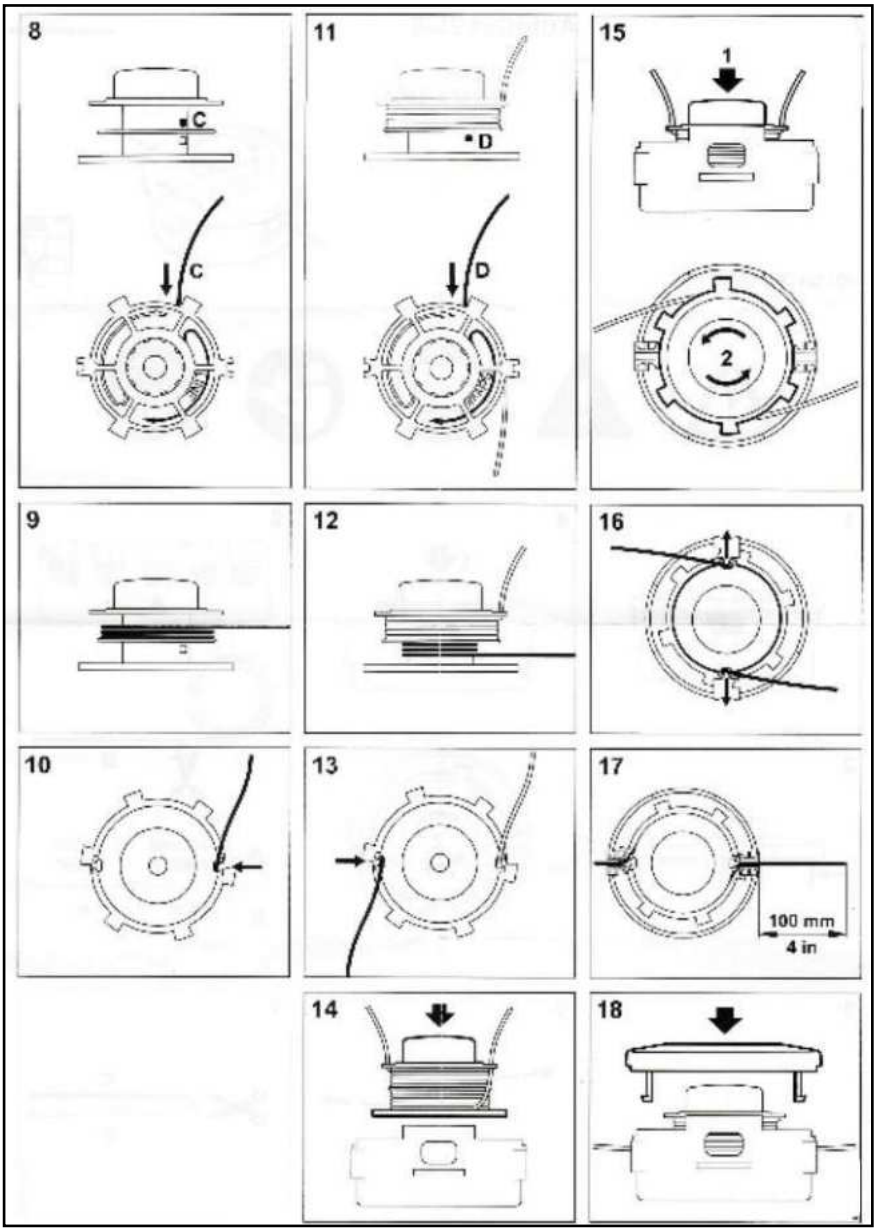
8
C
C
11
D
D
15
1
2
9
12
16
10
13
17
100 mm
4 in
14
18

FUEL SYSTEM MAINTENANCE

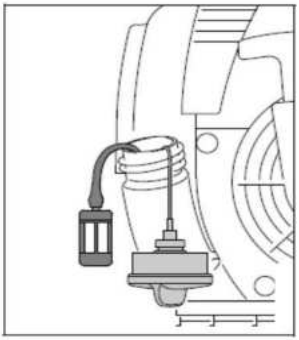

¡æ Drain fuel tank completely
¡æ Remove suction head with extraction hook ¡ç Detach from hose
¡æ Install new suction head into hose assembly
¡æ Reinsert suction head into tank
CRITICAL NOTES:
¡æ Do not attempt DIY repairs on fuel system components

HOLZFFORMA Advisory

Maintenance and repairs must be performed exclusively by certified dealers

Minimize Wear and Avoid Damage

Observing the instructions in this manual helps reduce the risk of unnecessary wear and damage to the power tool. The power tool must be operated, maintained, and stored with the due care and attention described in this owner's manual.

User Responsibility

The user is responsible for all damage caused by non-observation of the safety precautions, operating, and maintenance instructions in this manual. This includes:

¡æ Damage to the engine due to neglect or deficient maintenance (e.g., air and fuel filters), incorrect carburetor adjustment, or inadequate cleaning of cooling air inlets (intake ports, cylinder fins).
¡æ Corrosion and other consequential damage resulting from improper storage.
¡æ Damage to the machine resulting from the use of poor-quality replacement parts.
¡æ Consequential damage caused by continuing to use the product with defective components.
¡æ Alterations or modifications to the product not approved by Holzfforma.
¡æ Using tools or accessories that are neither approved nor suitable for the product or are of poor quality.
¡æ Using the product for purposes for which it was not designed, including sports or competitive events.

Maintenance Work

All the operations described in the " Maintenance Chart" must be performed on a regular basis. If these maintenance operations cannot be performed by the owner, they should be performed by a servicing dealer. Holzfforma recommends that servicing and repair work be carried out by trained professionals.

Parts Subject to Wear and Tear

Some parts of the power tool are subject to normal wear and tear even during regular operation in accordance with instructions and, depending on the type and duration of use, have to be replaced in good time. These include:

¡æ Cutting attachments (all types)
¡æ Mounting hardware for cutting attachments (rider plate, nuts, etc.)
¡æ Deflectors for cutting attachments
¡æ Clutch
¡æ Filters (air, fuel)

Important components (FF85,FF120,FF200,FF250,FF280)

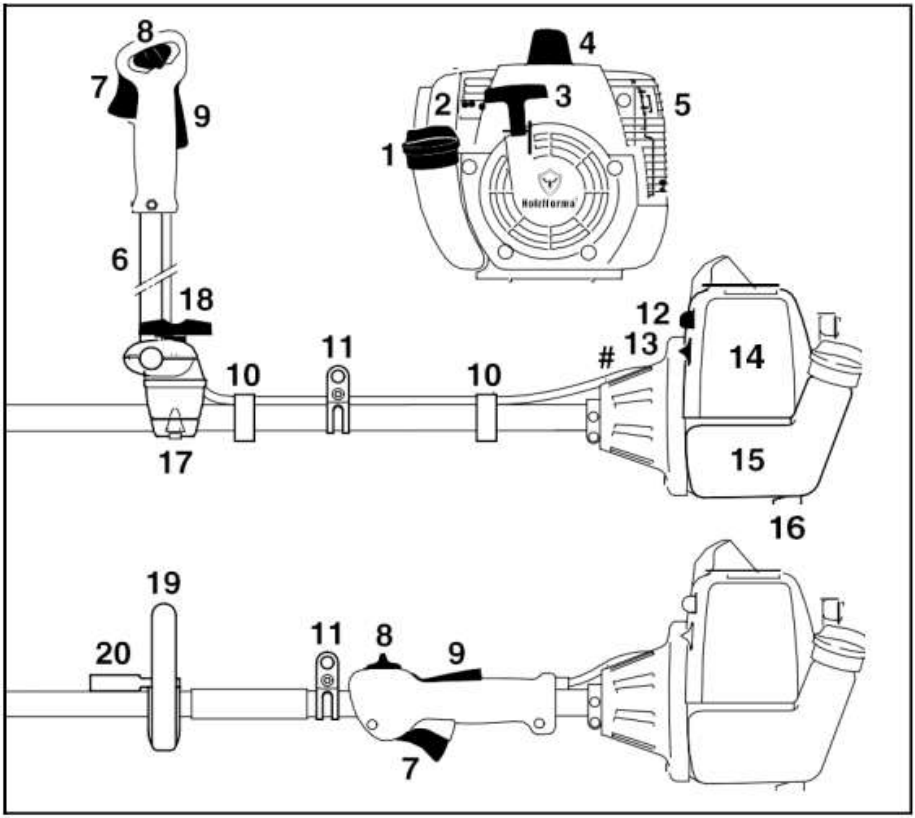

1 Fuel Filler Cap
2 Carburetor adjusting screws3
Starter Grip
4 Spark Plug Boot
5 Muffler
6 Bike Handle
7 Throttle Trigger
8 Slide Control
9 Throttle Trigger Interlock
10 Throttle Cable Retainer
11 Carrying Ring
12 Fuel Pump
13 Rotary Choke Knob
14 Air Filter Cover
15 Fuel Tank
16 Machine Support
17 Handle Support
18 Wing Screw
19 Loop Handle
20 Barrier Bar

Important components (FF143RII/PRO, FF226R/PRO,FF541R/PRO)

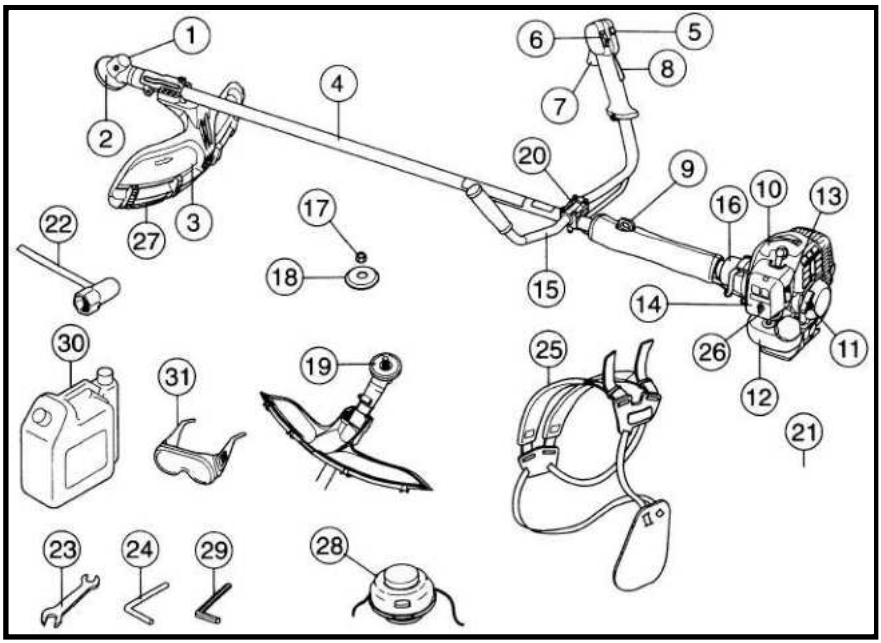

1 Grease filler cap, bevel gear
2 Bevel gear
3 Cutting attachment guard
4 Shaft
5 Start throttle button
6 Stop switch
7 Throttle control
8 Throttle lockout
9 Suspension ring
10 Cylinder cover
11 Starter handle
12 Fuel tank
13 Choke control
14 Air filter cover
15 Handlebar
16 Clutch cover
17 Locking nut
18 Support flange
19 Drive disc
20 Handlebar clamp
21 Operator's manual
22 Socket spanner
23 Spanner
24 Locking pin
25 Harness
26 Air purge
27 Guard extension
28 Trimmer head
29 Allen key
30 Tank
31 Goggle

Important components (FF55,FF55E,FF55R)

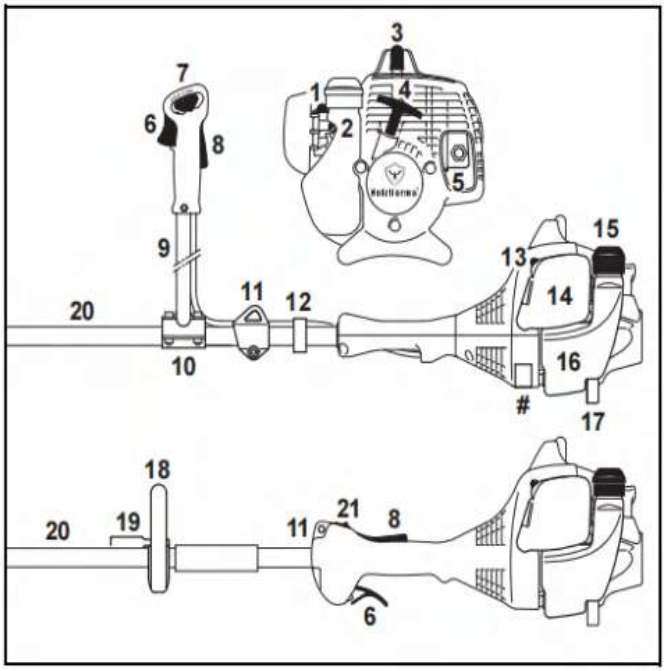

1 Fuel Pump
2 Carburetor Adjusting Screws
3 Spark Plug Boot
4 Starter Grip
5 Muffler with Spark Arresting Screen
6 Throttle Trigger
7 Slide Control
8 Throttle Trigger Lockout
9 Bike Handle
10 Handle Support
11 Carrying Ring
12 Throttle Cable Retainer
13 Choke Lever
14 Air Filter Cover
15 Fuel Filler Cap
16 Fuel Tank
17 Machine Support
18 Loop Handle
19 Barrier Bar
20 Drive Tube
21 Stop Switch

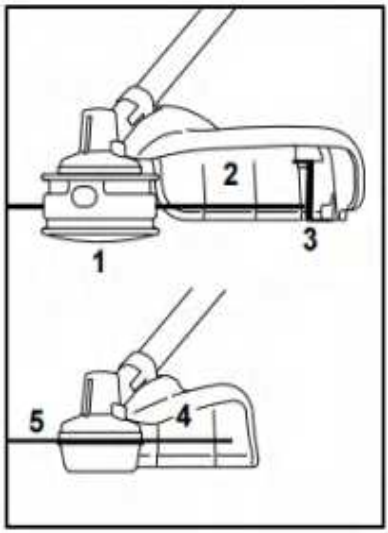

1 Mowing Head
2 Deflector for Mowing Heads
3 Line Limiting Blade
4 Deflector with Skirt for all Mowing Attachments
5 Metal Mowing Tool

Important Components (FF400, FF450, FF480)

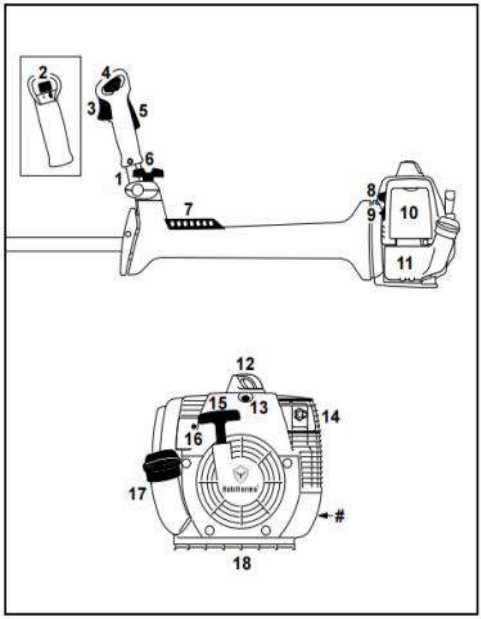

1 Handlebar
2 Switch for handle heating (option)
3 Throttle trigger
4 Slide control
5 Throttle trigger lockout
6 Clamp screw
7 Carrying strip
8 Manual fuel pump
9 Choke knob
10 Filter cover
11 Fuel tank
12 Spark plug boot
13 Decompression valve
14 Muffler
15 Starter grip
16 Carburetor adjusting screw
17 Tank cap
18 Guard plate

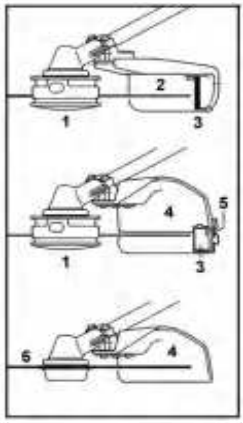

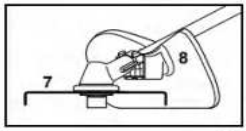

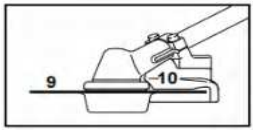

1 Mowing head
2 Defector for mowing heads only
3 Blade
4 Deflector for all mowing attachments
5 Skirt
6 Metal mowing attachment
7 Shredder blade
8 Shredder deflector (for shredder blade only)
9 Circular saw blade
10 Limit stop for circular saw blades only

TECHNICAL DATA

Model:	FF55/E/R	FF85	FF120	FF200	FF250	FF280
Type of the engine:	Two-stroke air-cooled single-cylinder engine					
Cylinder Displacement(cm3):	27.2	25.4	30.8	36.3	40.2	38.9
Power Output to ISO 7293(KW):	0.8	0.8	1.2	1.3	1.4	1.7
Cylinder Bore(mm):	34	34	35	38	40	40
Cylinder Stroke (mm):	30	28	32	32	32	31
Idle Speed(rpm):	3000±200	3000±200	3000±200	3000±200	3000±200	3000±200
Maximum Power Speed(rpm):	9500	10500	12300	12300	12300	12500
Max. output shaft speed(cutting tool) (rpm):	7700	7500	8790	8790	8790	8930
Fuel tank capacity (L):	0.33	0.44	0.64	0.64	0.64	0.58
Total Mass(excl. cutting equipment) (kg):	5	5.3	6.3	6.3	6.3	7.9
Rotational direction:	counterclockwise					
Cutting Length (blade length)(mm):	230	250	255	255	255	300
Sound power levelдB(A):	108	106	111	111	112	115
Model:	**FF400**	**FF450**	**FF480**	**FF143RII/ PRO**	**FF226R/PRO**	**FF541R/ PRO**
Type of the engine:	Two-stroke air-cooled single-cylinder engine					
Cylinder Displacement(cm3):	40.2	44.3	48.7	41.5	25.4	41.5
Power Output to ISO 7293(KW):	1.7	1.9	2	1.5	0.8	1.6
Cylinder Bore(mm):	40	42	44	40	34	40
Cylinder Stroke (mm):	32	32	32	33	28	33
Idle Speed(rpm):	3000±200	3000±200	3000±200	3000±200	3000±200	3000±200
Maximum Power Speed(rpm):	12500	12500	12500	12000	12000	12000
Max. output shaft speed(cutting tool) (rpm):	8800	8800	8800	8570	8570	8570
Fuel tank capacity (L):	0.67	0.67	0.67	0.94	0.75	0.94
Total Mass(excl. cutting equipment) (kg):	8.5	8.5	8.5	7.6	5.1	7.3
Rotational direction:	counterclockwise					
Cutting Length (blade length)(mm):	300	300	300	255	255	255
Sound power levelдB(A):	112	113	113	113	112	109

WARRANTY CONDITIONS

By presenting this warranty card, the seller confirms the right to free of charge elimination of faults that occur in the product due to the manufacturer's defect within the warranty period.
FARMERTEC Service Centers will only consider warranty claims if the warranty card is correctly and completely filled out in the prescribed form and the documents required for warranty repair are provided.
The warranty period of the FARMERTEC product is 12 months and is calculated from the date of purchase.
All maintenance work must be carried out in accordance with the operating instructions supplied with the product. If the work cannot be carried out by the user himself, it must be entrusted to a specialized service center authorized by FARMERTE. Failure to observe this condition as well as the instructions and safety precautions may result in malfunctions for which the user is responsible. These include:
Damage to the drive train due to untimely or insufficient maintenance (e.g. air or fuel filter), incorrect carburetor setting or insufficient cleaning of the air cooling system;
Damage or defects caused by the use of an incorrectly prepared fuel mixture;
Modifications to the design that are not authorized by FARMERTEC, including the use of the product with combinations of cutting tools and/or guards that are not authorized by the manufacturer;
Use of the product for other than its intended purpose.
Malfunctions due to use of the product with defective parts.
THE WARRANTY DOES NOT APPLY:
Products with mechanical damage (cracks, chips, melting) and damage caused by exposure to high or low temperatures, aggressive media and high humidity (working in the rain, cleaning with water, etc.), as well as damage caused by improper storage (corrosion, etc.);
Parts and assemblies subject to natural wear and tear and classified as wearing parts according to the Operating Instructions (filters, blades, chain drums, springs, starter elements, lubricants, oil seals, rubber seals, etc.);
Products that have prematurely failed due to natural wear and tear caused by excessive use (commercial of household tools, rental, etc.).
In case any condition mentioned in the guarantee card is recognized as non-compliant with the law, its invalidity does not affect the validity of other conditions.
Please read this warranty card and the operating instructions carefully before using the product.

Warranty Card

Owner Information:

Name: _____Phone: _____

Address: _____ Email: _____

Product Details£"

Product:_____ Model: _____Serial No.: _____

Retailer: _____Purchase Date: _____Inv No.:_____



Holzfforma®

for the working man