FS 85, 85 R

STIHL



2 - 46 Instruction Manual

Contents

1 Introduction.....2
2 Guide to Using this Manual.....2
3 Safety Precautions and Working Techniques.....3
4 Approved Combinations of Cutting Attachment, Deflector, Handle and Harness.....12
5 Approved Power Tool Attachments.....13
6 Mounting the Bike Handle.....13
7 Mounting the Loop Handle.....17
8 Adjusting the Throttle Cable.....18
9 Fitting the Carrying Ring.....19
10 Mounting the Deflector.....19
11 Mounting the Cutting Attachment.....20
12 Fuel.....24
13 Fueling.....25
14 Fitting the Harness.....25
15 Balancing the Machine.....27
16 Starting / Stopping the Engine.....28
17 Transporting the Unit.....30
18 Operating Instructions.....32
19 Cleaning the Air Filter.....33
20 Adjusting the Carburetor.....33
21 Spark Plug.....35
22 Lubricating the Gearbox.....36
23 Replacing the Starter Rope and Rewind Spring.....36
24 Storing the Machine.....38
25 Sharpening Metal Cutting Blades.....39
26 Maintaining the Mowing Head.....39
27 Inspection and Maintenance by User.....40
28 Inspections and Maintenance by Dealer.....41
29 Maintenance and Care.....41
30 Minimize Wear and Avoid Damage.....42
31 Main Parts.....43
32 Specifications.....44
33 Maintenance and Repairs.....45
34 Disposal.....45
35 EC Declaration of Conformity.....45

1 Introduction

Dear Customer,

Thank you for choosing a quality engineered STIHL product.

It has been built using modern production techniques and comprehensive quality assurance. Every effort has been made to ensure your satisfaction and trouble-free use of the product.

Please contact your dealer or our sales company if you have any queries concerning this product.

Your

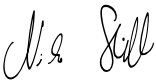

Dr. Nikolas Stihl

2 Guide to Using this Manual

2.1 Pictograms

The meanings of the pictograms attached to the machine are explained in this manual.

Depending on the model concerned, the following pictograms may be attached to your machine.



Fuel tank; fuel mixture of gasoline and engine oil



Operate decompression valve



Manual fuel pump



Operate manual fuel pump



Tube of grease



Intake air: Summer operation



Intake air: Winter operation



Handle heating

2.2 Symbols in text

WARNING

Warning where there is a risk of an accident or personal injury or serious damage to property.

NOTICE

Caution where there is a risk of damaging the machine or its individual components.

2.3 Engineering improvements

STIHL's philosophy is to continually improve all of its products. For this reason we may modify

Original Instruction Manual
0000007829_011_GB

Printed on chlorine-free paper
Paper is recyclable.

© ANDREAS STIHL AG & Co. KG 2025
0458-393-8321-C. VA4. H25.

the design, engineering and appearance of our products periodically.

Therefore, some changes, modifications and improvements may not be covered in this manual.

3 Safety Precautions and Working Techniques



Because the machine is a high-speed fast-cutting power tool, special safety precautions must be observed to reduce the risk of personal injury.



It is important that you read and understand the User Manual before commissioning and keep it in a safe place for future reference. Non-compliance with the User Manual may cause serious or even fatal injury.

Observe all applicable local safety regulations, e.g. by trade organizations, social insurance institutions, labor safety authorities etc.

If you have never used a power tool before: Have your dealer or other experienced user show you how to operate your machine – or attend a special course to learn how to operate it.

Minors should never be allowed to use the machine – except for apprentices over the age of 16 when working under supervision.

Children, animals and bystanders must remain at a distance.

When not using the machine, it must be laid down in such a way that it does not endanger anyone. Ensure that the machine cannot be used without authorization.

The user is responsible for accidents or risks involving third parties or their property.

Do not lend or rent your power tool without the User Manual. Be sure that anyone using it understands the information contained in this manual.

The use of machines that emit noise may be limited to certain hours of the day as specified by national and/or regional or local regulations.

Anyone operating the machine must be well rested, in good physical health and in good mental condition.

If you have any condition that might be aggravated by strenuous work, check with your doctor before operating a machine.

If you have a pacemaker: The ignition system of your machine produces an electromagnetic field of very low intensity. This field may interfere with some pacemakers. STIHL recommends that persons with pacemakers consult their physician and the pacemaker manufacturer to reduce any health risk.

Anyone who has consumed alcohol or drugs or medicines affecting their ability to react must not operate a power tool.

Depending on the cutting attachment fitted, use your power tool only for cutting grass, wild growth, shrubs, scrub, bushes, small diameter trees and similar materials.

The machine must not be used for any other purposes – **risk of accidents!**

Only use cutting attachments and accessories that are explicitly approved for this power tool model by STIHL or are technically identical. If you have any questions in this respect, consult your dealer. Use only high quality parts and accessories. in order to avoid the risk of accidents and damage to the machine.

STIHL recommends the use of original STIHL tools and accessories. They are specifically designed to match the product and meet your performance requirements.

Never attempt to modify your power tool in any way since this may increase the risk of personal injury. STIHL excludes all liability for personal injury and damage to property caused while using unauthorized attachments.

Do not use a high-pressure washer to clean the power tool. The solid jet of water may damage parts of the unit.

The guard provided with your machine may not protect the operator from all foreign objects (gravel, glass, wire etc.) ejected by the revolving cutting attachment. Ejected objects may also ricochet and strike the operator.

3.1 Clothing and equipment

Wear proper protective clothing and equipment.



Clothing must be sturdy but allow complete freedom of movement. Wear close-fitting clothes such as a boiler suit, not a loose jacket.



Do not wear clothing which could become trapped in wood, brush or moving parts of the machine. Do not wear a scarf, necktie or jewelry. Tie

up and confine long hair above your shoulders.



Wear safety boots with steel toe caps and non-slip soles.

Sturdy shoes with non-slip shoes are permissible only when using mowing heads.

WARNING



To reduce the risk of eye injuries, wear close-fitting safety glasses in accordance with European Standard EN 166. Make sure the safety glasses are a snug fit.

Wear face protection and make sure it is a good fit. Face protection alone is not sufficient to protect the eyes.

Wear "personal" sound protection, e.g. ear defenders.

Wear a safety hard hat for thinning operations, when working in high scrub and where there is a danger of head injuries from falling objects.



Wear sturdy protective gloves made of a resistant material (e. g. leather).

STIHL can supply a comprehensive range of personal protective equipment.

3.2 Transporting the machine

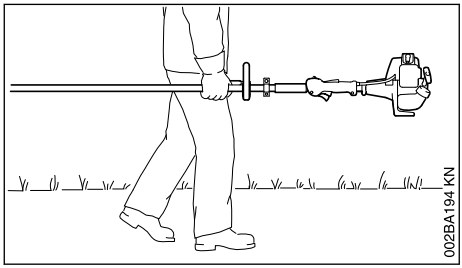

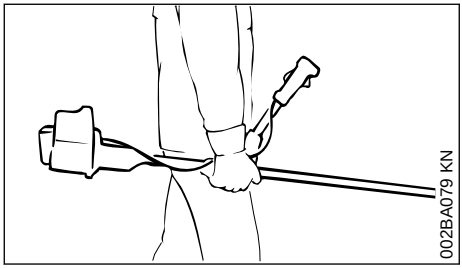

Always stop the engine.

Carry the machine hanging on the harness or by the shaft so that it is balanced.

To reduce the risk of cut injuries, fit transport guard on the cutting attachment, even when carrying the tool for short distances – see also "Transporting the Unit".



Avoid touching hot parts of the machine and gearbox – **risk of burns!**

By vehicle: When transporting in a vehicle, properly secure your machine to prevent turnover, damage and fuel spillage.

3.3 Refueling



Gasoline is an extremely flammable fuel. Keep clear of naked flames. Do not spill any fuel – do not smoke.

Always shut off the engine before refueling.

Do not fuel a hot engine – **fuel may spill and cause a fire.**

Open the fuel cap carefully to allow any pressure build-up in the tank to release slowly and avoid fuel spillage.

Only refuel the machine in a well ventilated place. If fuel has been spilled, immediately clean the machine – do not allow your clothes to be splashed with fuel. If that happens, change your clothes at once.



After refueling, close the fuel cap as tightly as possible.

This helps reduce the risk of unit vibrations causing an incorrectly tightened fuel cap to loosen or come off and spill quantities of fuel.

Check for leaks. Do not start the engine if there is a fuel leak – **serious or fatal burns could result!**

3.4 Before starting

Check that your power tool is properly assembled and in good condition – refer to appropriate chapters in the User Manual.

– Check the fuel system for leaks, especially the visible parts, e. g., fuel cap, hose connections, manual fuel pump (only in machines with a manual fuel pump). In case of leakage and damage, do not start the engine – **risk of fire!** Have the machine serviced by a dealer before using it

– Use only an approved combination of cutting attachment, deflector, handle and harness. All parts must be assembled properly and securely
– Slide control / stop switch must move easily to **STOP** or **0**
– Throttle trigger lockout (if installed) and throttle trigger must move easily – the throttle trigger must return to the idle position automatically
– Check that the spark plug boot is secure – a loose boot may cause sparking that could ignite combustible fumes **and cause a fire!**
– Cutting attachment or interchangeable attachment: correctly fitted, secure and in perfect condition
– Safety devices (e. g., deflector for cutting attachments, rider plate) for damage and/or wear. Always replace damaged parts. Do not use the machine with a damaged deflector or worn rider plate (if the writing and arrows are no longer discernible)
– Never attempt to modify the controls or safety devices
– Keep the handles dry and clean – free from oil and dirt – this is important for safe control of the machine
– Adjust the harness and handle(s) to suit your height and reach Observe the chapter "Fitting the Harness" – "Balancing the machine"

To reduce the risk of personal injury, do not operate your power tool if it is damaged or not properly assembled!

To prepare for emergencies when using a harness: Practice setting down the machine quickly. To avoid damage, do not throw the unit to the ground when practicing.

3.5 Starting the engine

Start the engine at least 3 meters from the fueling spot, outdoors only.

Place the unit on firm ground in an open area. Make sure you have good balance and secure footing. Hold the unit securely. The cutting attachment must be clear of the ground and all other obstructions because it may begin to run when the engine starts.

This is a one-person machine – ensure that there is no-one within 15 meters of the machine, not even when starting the power tool! **Risk of injury** due to ejected objects!



Avoid contact with the cutting attachment – **risk of injury!**



Do not drop-start the power tool – start the engine as described in the User Manual. The cutting attachment runs on for a short while after releasing the throttle trigger – **coasting effect!**

Check engine idling: The cutting attachment must remain at a standstill when the engine idles – throttle trigger released.

Keep easily combustible materials (e. g., wood chips, bark, dry grass, fuel) away from hot exhaust gases and hot muffler surfaces – **risk of fire!**

3.6 Holding and guiding the machine

Always hold the unit firmly with both hands on the handles.

Make sure you always have good balance and secure footing.

3.6.1 For versions with bike handle

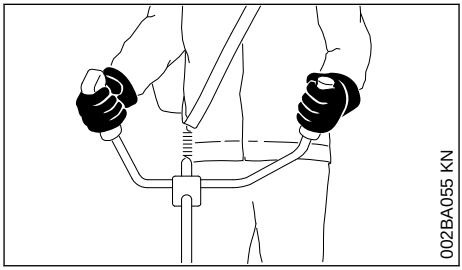

Right hand on control handle, left hand on grip on handlebar.

3.6.2 For versions with loop handle

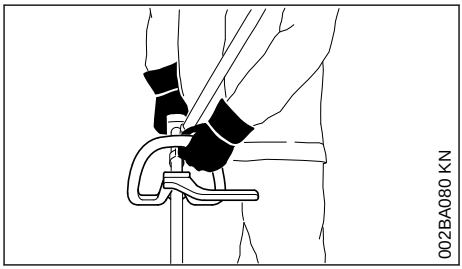

For versions with loop handle and loop handle with barrier bar, left hand on the loop handle, right hand on the control handle – even if you are left-handed.

3.7 While working

Make sure you always have good balance and secure footing.

In the event of impending danger or in an emergency, switch off the engine immediately - move the slide control/stop switch to **STOP** or **0**.



Within a wide area around the workplace, there is a risk of accident by ejected objects, therefore ensure that there is no-one within a 15 m radius of the machine. This distance must also be maintained in relation to objects (vehicles, window panes) – **risk of property damage!** Even at a distance over 15 m, danger cannot be ruled out.

Check that the engine is properly idling so that the cutting tool will not continue rotating after you release the throttle trigger.

Check and correct the idle speed setting at regular intervals. If the cutting attachment still rotates at idle speed, have your dealer make proper adjustments or repairs. STIHL recommends you have this work done by a STIHL servicing dealer.

Take special care in slippery conditions – **damp, snow, ice,** on slopes or uneven ground.

Watch out for obstacles: tree stumps, roots – **risk of tripping or stumbling!**

Only work while standing on the ground, never on a ladder or mobile elevated work platform.

Be particularly alert and cautious when wearing hearing protection because your ability to hear warnings (shouts, alarms, etc.) is restricted.

Take breaks when you start getting tired or feeling fatigue – **risk of accidents!**

Work calmly and carefully – in daylight conditions and only when visibility is good. Proceed with caution, do not put others in danger.



As soon as the engine is running, the power machine generates toxic exhaust gas.As soon as the engine is running, the power machine generates toxic exhaust gas. These gases may be odorless and invisible and may contain unburned hydrocarbons and benzene. Never run the engine indoors or in poorly ventilated locations, even if your model is equipped with a catalytic converter.

To reduce the risk of **serious or fatal injury from breathing toxic fumes**, ensure proper ventilation when working in trenches, hollows or other confined locations.

Stop work immediately if you start suffering from nausea, headaches, impaired vision (e.g. your field of vision gets smaller), impaired hearing, dizziness, or impaired concentration – these symptoms may possibly be the result of too-high exhaust gas concentration – **Risk of accidents!**

Operate your power tool so that it produces a minimum of noise and emissions – do not run the engine unnecessarily, accelerate the engine only when working.

To reduce the risk of fire, **do not smoke** while operating or standing near your power tool. Combustible fuel vapor may escape from the fuel system.

Dust, fumes and smoke produced while working may be hazardous to health. Wear respiratory protection in case of heavy dust or smoke emission.

If your power tool is subjected to unusually high loads for which it was not designed (e.g. heavy impact or a fall), always check that it is in good condition before continuing work – see also "Before Starting".

Check in particular that the fuel system has no leaks and the safety equipment is fully operative. Never use a power tool that is no longer safe to operate. In case of doubt, contact a dealer.

Do not operate your power tool in the starting throttle position – engine speed cannot be controlled in this position.



To **reduce the risk of injury**from ejected objects, never operate the unit without the proper deflector for the type of cutting attachment being used.



Check the work site – rocks, metal objects etc. may be caught up and ejected – possibly over a distance of 15 m – **risk of injury!** – They can also damage the cutting attachment and other property (e. g. parking vehicles, windows).

Be particularly careful when working on difficult, densely grown terrain.

When mowing in high shrubbery, under shrubbery and hedges: Hold the cutting tool at a working height of at least 15 cm – avoid risks to animals.

Always shut off the engine before leaving the unit unattended.

Examine the cutting attachment periodically at short intervals and as soon as you note any noticeable changes:
– Stop the engine, hold the machine securely, allow the cutting attachment to come to a stop
– Check condition and secure fitting; watch out for cracks
– Ensure that the cutting blades are sharp
– Replace damaged or blunt cutting attachments immediately, even in the event of minor hairline cracks

Clean grass and plant residue off the cutting attachment mounting at regular intervals – remove any accumulated material from the cutting attachment and deflector.

To **reduce the risk of injury**, shut off the engine before replacing the cutting attachment.



The gearbox gets hot during operation. Never touch the gearbox – **risk of burns!**

If a rotating cutting attachment touches a rock or another hard object, sparks can be generated which may possibly ignite combustible materials. Also dried-out plants and brushwood are combustible, above all in hot and dry weather. If there is a risk of fire, do not use cutting attachments in the vicinity of combustible materials, dried-out plants or brushwood. It is mandatory that you ask the responsible forestry office about current fire hazards.

3.8 Using mowing heads

Extend the cutting attachment deflector with the attached parts specified in the User Manual.

Only use a deflector with a properly fitted blade that limits the mowing line to the permissible length.

For manually adjustable mowing heads, always switch off the engine before adjusting the mowing line – **risk of injury!**

Misuse with mowing lines that are too long reduces the working speed of the engine. The constant slipping of the clutch causes overheating and damage to important components (e. g. clutch, plastic housing parts) – e. g. due to the cutting attachment rotating during idling – **risk of injury!**

3.9 When using metal cutting attachments

STIHL recommends the use of original STIHL metal cutting attachments. These have been optimized for the machine and the user's requirements.

Metal cutting attachments rotate very fast, generating forces acting on the attachments and on the cuttings.

Metal cutting attachments must be sharpened in regular intervals in accordance with the instructions.

Unevenly sharpened metal cutting attachments generate an imbalance which may cause extreme loads on the machine – **risk of breakage!**

Dull or improperly sharpened cutting edges can put a higher load on the cutting attachment and increase the **risk of injury**from cracked or broken parts.

After each contact of the metal cutting attachment with hard objects (e.g. stones, rocks, metal parts), check it for damage (e.g. tears and deformation). **To reduce the risk of injury**, remove burrs and other visible accumulated material because they may become detached and ejected at high speed during operation.

Do not continue using or attempt to repair damaged or cracked cutting attachments by means of welding, straightening or modifying the shape (unbalanced).

Particles or pieces may come off and hit the operator or a bystander at a high speed – **risk of most severe injuries!**

To reduce the above-named risks involved in operating a metal cutting attachment, ensure that the diameter of your metal cutting attachment is not too big. Also, the attachment must not be too heavy. It must be made of high-quality materials and have a suitable geometry (shape, thickness).

A metal cutting attachment not made by STIHL must not have a different weight, thickness, shape or a larger diameter than the largest STIHL metal cutting attachment approved for this metal cutting attachment – **risk of injury!**

3.10 Vibrations

Prolonged use of the power tool may result in vibration-induced circulation problems in the hands (whitefinger disease).

No general recommendation can be given for the length of usage because it depends on several factors.

The period of usage is prolonged by:
– Hand protection (wearing warm gloves)
– Work breaks

The period of usage is shortened by:
– Any personal tendency to suffer from poor circulation (symptoms: frequently cold fingers, tingling sensations).
– Low outside temperatures.
– The force with which the handles are held (a tight grip restricts circulation).

Continual and regular users should monitor closely the condition of their hands and fingers. If any of the above symptoms appear (e.g. tingling sensation in fingers), seek medical advice.

3.11 Maintenance and Repairs

Service the machine regularly. Do not attempt any maintenance or repair work not described in the instruction manual. Have all other work performed by a servicing dealer.

STIHL recommends that you have servicing and repair work carried out exclusively by an authorized STIHL servicing dealer. STIHL dealers are regularly given the opportunity to attend training courses and are supplied with the necessary technical information.

Only use high-quality replacement parts in order to avoid the risk of accidents and damage to the machine. If you have any questions in this respect, consult a servicing dealer.

STIHL recommends the use of genuine STIHL replacement parts. They are specifically designed to match your model and meet your performance requirements.

To reduce the risk of injury, **always shut off the engine** before carrying out any maintenance or repairs or cleaning the machine. – Exception: Carburetor and idle speed adjustments.

Do not turn the engine over on the starter with the spark plug boot or spark plug removed unless the slide control / stop switch is on **STOP** or **0** since there is otherwise a **risk of fire** from uncontained sparking.

To reduce the **risk of fire**, do not service or store your machine near open flames.

Check the fuel filler cap for leaks at regular intervals.

Use only a spark plug of the type approved by STIHL and make sure it is in good condition – see "Specifications".

Inspect the ignition lead (insulation in good condition, secure connection).

Check the condition of the muffler.

To reduce the **risk of fire and damage to hearing**, do not operate your machine if the muffler is damaged or missing.

Do not touch a hot muffler since **burn injury** will result.

Vibration behavior is influenced by the condition of the AV elements – check the AV elements at regular intervals.

3.12 Symbols on Deflectors

An **arrow** on the deflector shows the correct direction of rotation of the cutting attachments.

Some of the following symbols are applied to the outside of the deflector to indicate the approved combination of cutting attachment and deflector.


Deflector may be used with mowing heads.


Deflector may be used with grass cutting blades.


Deflector must not be used with mowing heads.


Do not use deflector with brush knives, shredder blades or circular saw blades.


Do not use deflector with brush knives, shredder blades, grass cutting blades or circular saw blades.


Deflector may be used with mowing heads. Not approved for use with brush knives, shredder blades or circular saw blades.


Deflector may be used with mowing heads – do not use metal cutting attachments.

3.13 Harness / Strap

The harness is included in the scope of supply or available as a special accessory.

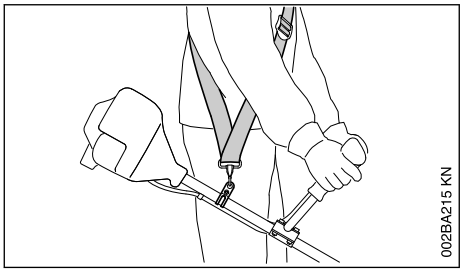

- Use a shoulder strap.
- With the engine running, attach the machine to the shoulder strap.

Grass cutting blades and brush knives must always be used in combination with a shoulder strap.

Circular saw blades must always be used in combination with a full harness with a quick-release system.

3.14 Mowing Head with Nylon Line

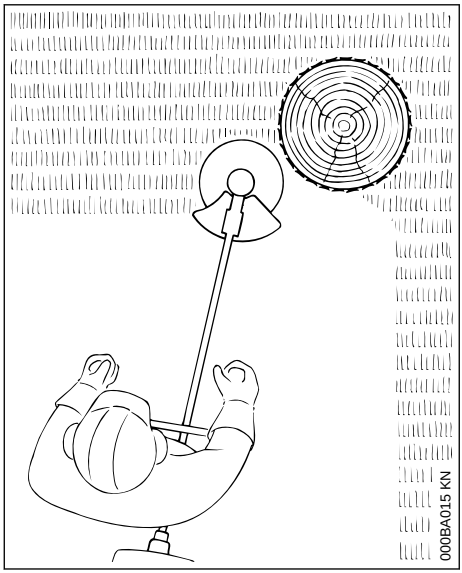

Nylon line achieves a soft cut for edging and trimming around trees, fence posts, etc. – less risk of damaging tree bark.

The mowing head comes with an instruction leaflet. Refill the mowing head with nylon line as described in the instruction leaflet.

WARNING

To reduce the risk of serious injury, never use wire or metal-reinforced line in place of the nylon line.

3.15 STIHL Polycut Mowing Head with Polymer Blades

For mowing unobstructed edges of meadows (without posts, fences, trees or similar obstacles).

Check the wear limit marks!

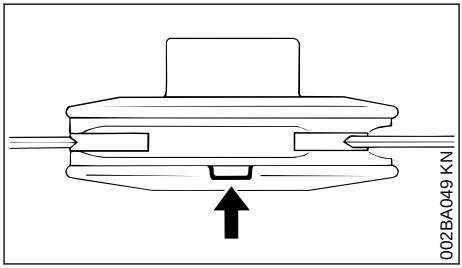

If one of the wear limit marks on the PolyCut mowing head is worn through (arrow): Do not continue using the mowing head. Install a new one. There is otherwise a **risk of injury** from thrown parts of the head.

It is important to follow the maintenance instructions for the PolyCut mowing head.

The PolyCut can also be equipped with mowing line in place of the polymer blades.

The mowing head comes with instruction leaflets. Equip the mowing head with polymers blades or nylon line as described in the instruction leaflets.

WARNING

Never use wire in place of the nylon mowing line – **risk of injury**.

3.16 Risk of Kickout (Blade Thrust) with Metal Cutting Attachments

WARNING



When using metal cutting attachments there is a risk of kickout when the rotating blade comes into contact with a solid object such as a tree trunk, branch, tree stump, rock or similar. The machine is thrown to the

right or to the rear – opposite to the attachment's direction of rotation.

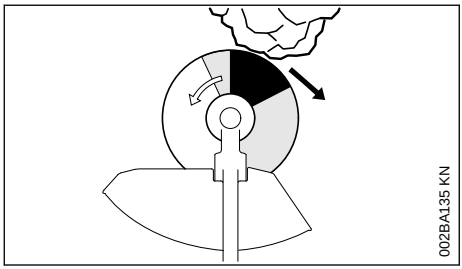

The **risk of kickout is greatest** when the **black area** of the rotating cutting attachment comes into contact with a solid object.

3.17 Grass Cutting Blade

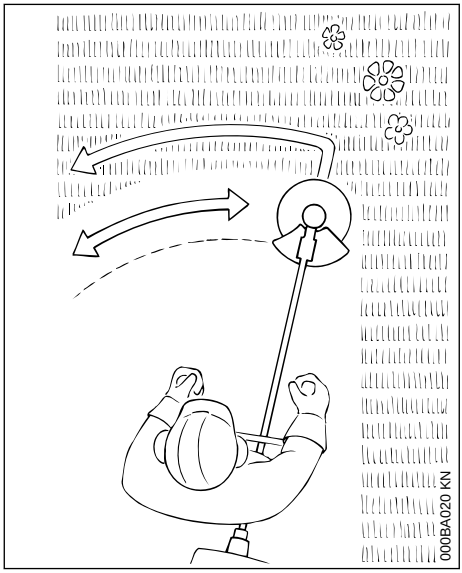

Use for grass and weeds only – sweep the brushcutter in an arc like a scythe.

WARNING

Improper use may damage the grass cutting blade – **risk of injury** from thrown parts.

Resharpen the grass cutting blade according to instructions when it has dulled noticeably.

3.18 Brush Knife

For cutting matted grass, wild growth and scrub and thinning young stands with a stem diameter of no more than 2 cm – do not cut thicker stems – **risk of accidents.**

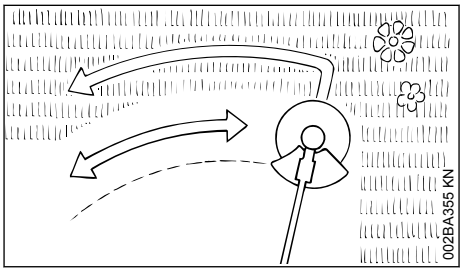

Use the brushcutter like a scythe (sweep it to the right and left) at ground level when cutting grass and thinning young stands.

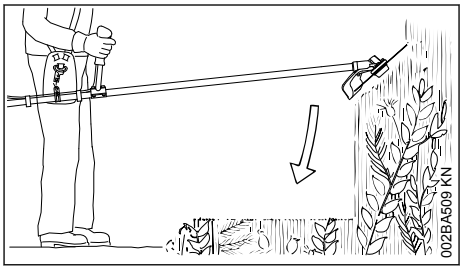

To cut wild growth and scrub, lower the brush knife down onto the growth to achieve a shredding effect – always keep the cutting attachment below hip level during this process.

Exercise extreme caution when using this method of cutting. The higher the cutting attachment is off the ground, the greater the risk of injury from cuttings being thrown sideways.

Warning! Improper use of a brush knife may cause it to crack, chip or shatter – **risk of injury** from thrown parts.

To reduce the risk of injury it is essential to take the following precautions:

– Avoid contact with stones, rocks, pieces of metal and other solid foreign objects.
– Never cut wood or shrubs with a stem diameter of more than 2 cm – use a circular saw blade for such work.
– Inspect the brush knife at regular short intervals for signs of damage. Do not continue working with a damaged brush knife.
– Resharpen the brush knife regularly and whenever it has dulled noticeably, and have it balanced if necessary (STIHL recommends a STIHL servicing dealer).

3.19 Circular Saw Blade

Suitable for cutting shrubs and trees with a maximum stem diameter of 4 cm.

Before starting the cut, accelerate the engine up to full throttle. Perform cut with uniform pressure.

Use circular saw blades only with a matching limit stop of the correct diameter.

WARNING

To reduce the risk of blade damage, avoid contact with stones and the ground. Resharpen the blade properly in good time – dull teeth may result in the blade cracking and shattering and causing serious injury.

When felling, maintain a distance of at least two tree lengths from the next felling site.

3.19.1 Risk of kickout

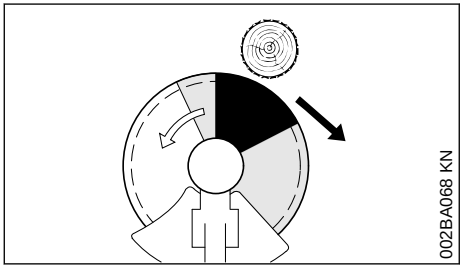

The risk of kickout is highest in the black area of the blade: Do not use this area of the circular saw blade for cutting.

There is also a risk of kickout when using the lighter shaded areas of the blade: These areas of the blade should only be used by experienced operators with specialized training.

STIHL recommends that you use the non-shaded area of the circular saw blade. Always start the cut with this area of the blade.

4 Approved Combinations of Cutting Attachment, Deflector, Handle and Harness

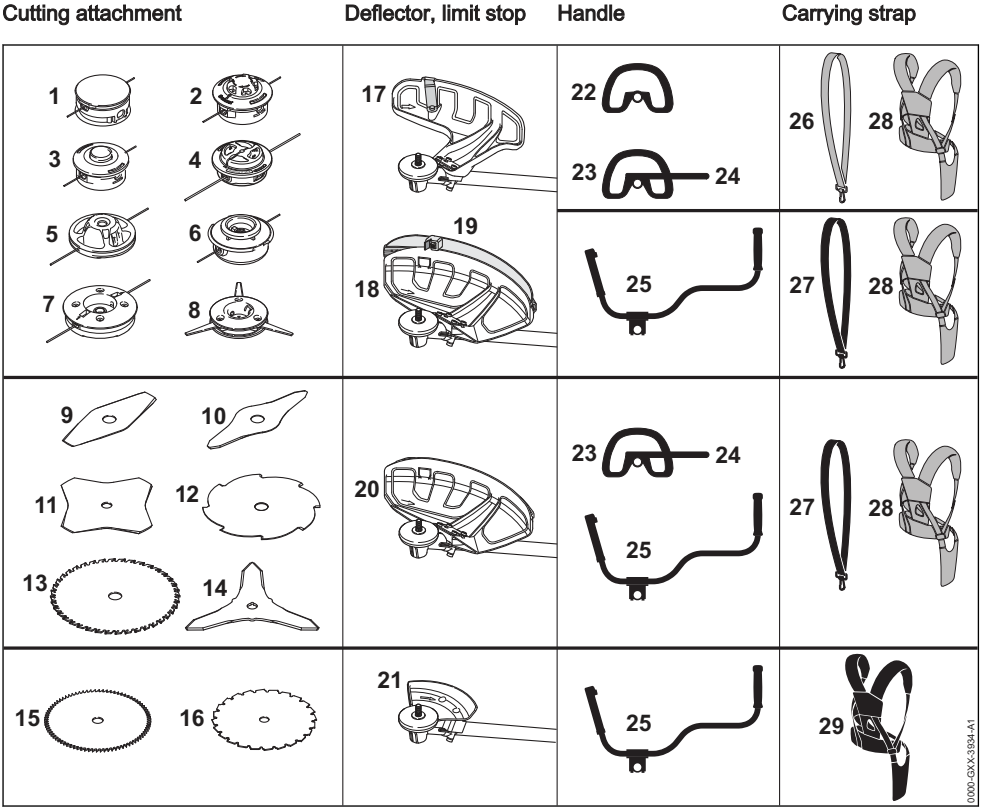

4.1 Permissible combinations

Choose the correct combination from the table depending on the cutting tool!

WARNING

For safety reasons only the cutting attachments, deflector, handle and harness versions within one line of the table may be combined with one another. No other combinations are permitted because of the **risk of accidents!**

4.2 Cutting attachments

4.2.1 Mowing heads

1 STIHL SuperCut 20-2

2 STIHL AutoCut C 25-2

3 STIHL AutoCut 25-2 / AutoCut 27-2

4 STIHL AutoCut C 26-2

5 STIHL FixCut 31-2

6 STIHL TrimCut 31-2

7 STIHL DuroCut 20-2

8 STIHL PolyCut 20-3

4.2.2 Metal cutting tools

9 Grass cutting blade 230-2 (230 mm dia.)

10 Grass cutting blade 260-2 (260 mm dia.)

11 Grass cutting blade 230-4 (230 mm dia.)

12 Grass cutting blade 230-8 (230 mm dia.)

13 Grass cutting blade 250-40 Spezial (250 mm dia.)

14 Brush knife 250-3 (250 mm dia.)

15 Circular saw blade 200 scratcher tooth (Ø 200 mm)

16 Circular saw blade 200 chisel tooth (Ø 200 mm)

WARNING

Grass cutting blades, brush knives and circular saw blades made of other, non-metallic materials must not be used.

4.3 Deflectors, limit stop

17 Deflector for mowing heads

18 Deflector with

19 Skirt and blade for mowing heads

20 Deflector without skirt and blade for metal cutting attachments, items 9 to 14

21 Limit stop for circular saw blades

4.4 Handles

22 Loop handle

23 Loop handle with

24 Barrier bar

25 Bike handle

4.5 Shoulder straps

26 Shoulder strap can be used

27 Shoulder strap must be used

28 Full harness can be used

29 Full harness must be used

5 Approved Power Tool Attachments

The following STIHL attachments may be mounted to the basic power tool:

Attachment	Application
BF	Cultivator with pick tines
FCS [2) 3)]	Edger
FH	Power scythe, adjustable
HL 0° [1)]	Long reach hedge trimmer
HL 145° [2)]	Hedge trimmer, adjustable
HT [1)]	Pole saw
SP [1) 4)]	Special harvester
SP 10 [1)]	Special harvester
SP 20 [1) 5)]	Special harvester

6 Mounting the Bike Handle

6.1 Versions

The trimmer comes in versions with a fixed handle support and a swiveling handle support.

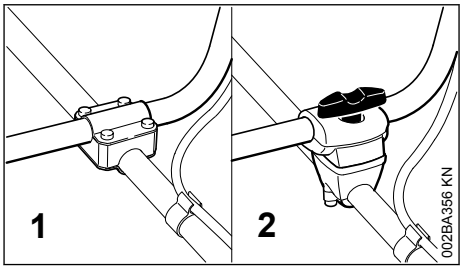

1 Version with fixed handle support – see "Mounting Bike Handle with Fixed Handle Support".

2 Version with swiveling handle support – see "Mounting Bike Handle with Swiveling Handle Support".

6.2 Mounting Bike Handle with Fixed Handle Support

The fixed handle support is supplied separately and must be mounted to the drive tube.

1) Not approved for models with bike handle

2) Limited suitability for models with bike handle

3) It is not necessary to use the shoulder strap

4) Use handle hose supplied with the machine

5) Use flexible shaft supplied with the attachment

6.2.1 Mounting the Handlebar

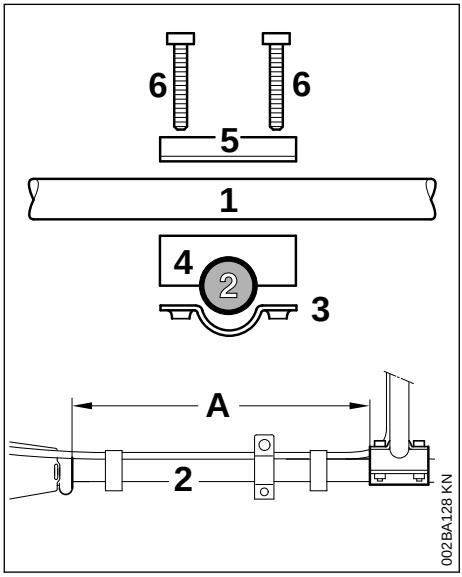

- Mount the handlebar (1) on the drive tube (2) about 40 cm (16 in) (A) from the engine.
- Place the clamp (3) and handle support (4) against the drive tube.
- Fit the handlebar (1) in the handle support – the rubber handle must be on the left (viewed from the engine).
- Place the clamp (5) on the handle support.
- Insert the screws (6) through the holes in the parts and screw them into the clamp (3) as far as stop.
- Line up the handlebar.
- Tighten down the screws firmly.

6.2.2 Mounting the Control Handle

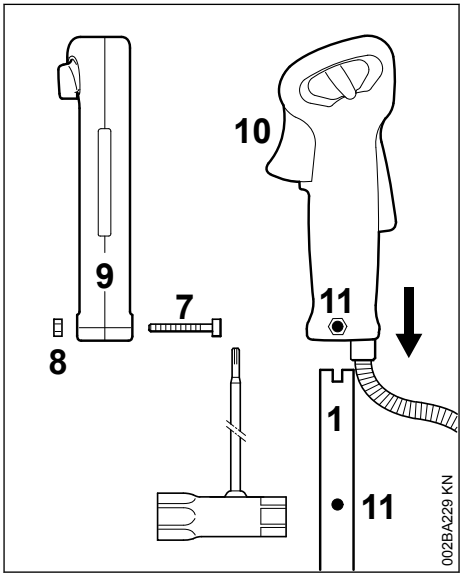

- Take out the screw (7) – the nut (8) **remains** in the control handle (9).
- Push the control handle onto the handlebar (1) until the holes (11) line up – the throttle trigger (10) must point towards the gearbox.
- Insert the screw and tighten it down firmly.

6.2.3 Fitting the Throttle Cable

NOTICE

Do not kink the throttle cable or lay it in tight radii – make sure the throttle trigger moves freely.

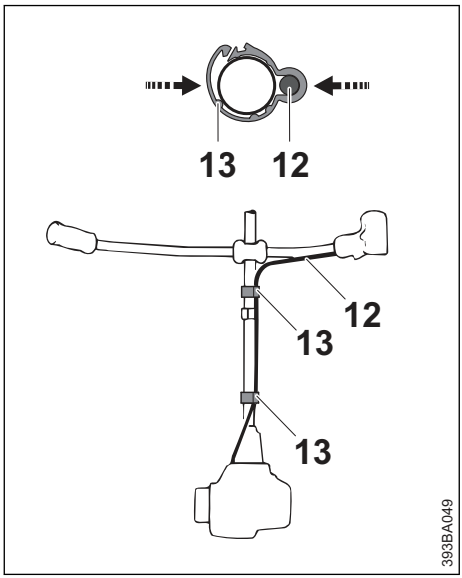

- Position the throttle cable retainer (13) and throttle cable (12) against the drive tube.
- Close the throttle cable retainer (13). The retainer (13) snaps into place.

6.2.4 Adjusting the Throttle Cable

- Check adjustment of throttle cable – see chapter on "Adjusting the Throttle Cable".

6.3 Mounting Bike Handle with Swiveling Handle Support

The machine is supplied with the swiveling handle support already mounted on the shaft. To mount the handlebar it is necessary to remove the clamp moldings.

6.3.1 Removing the Clamp Moldings

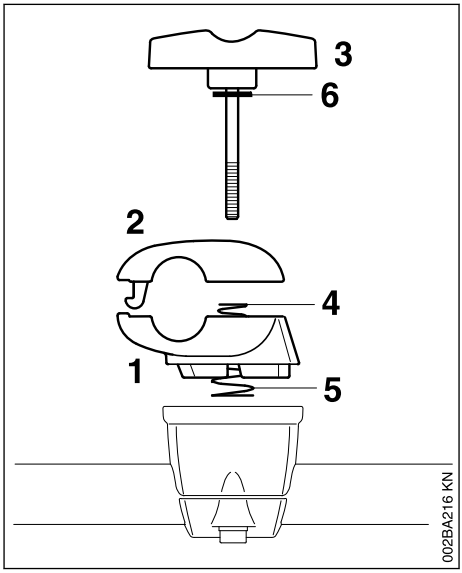

- Hold the lower clamp (1) and upper clamp (2) firmly together.
- Release the wing screw (3) – the clamps are loose once the wing screw has been released. They are pushed apart by the two springs (4 and 5).
- Pull out the wing screw – the washer (6) remains on the wing screw.
- Separate the clamp moldings – the springs (4 and 5) remain in the lower clamp.

6.3.2 Securing the Handlebar

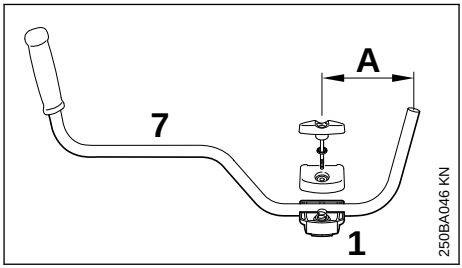

- Place the handlebar (7) in the lower clamp (1) so that distance A is no more than 15 cm (6 in).
- Place the upper clamp in position and hold both clamp moldings together.
- Push the wing screw through the two clamps as far as stop – hold all parts together and secure them.

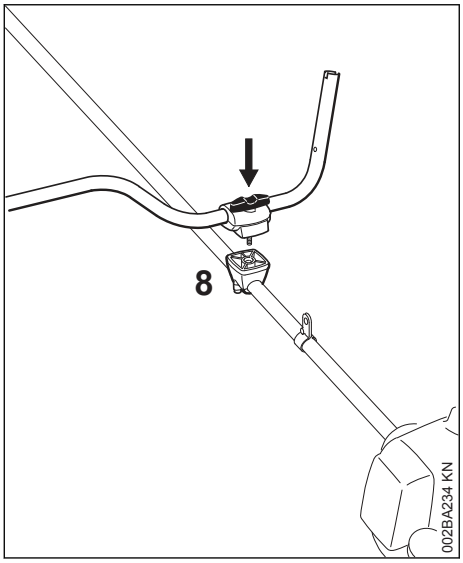

- Place the secured assembly on the handle support (8) with the wing screw at the side nearest the engine.
- Push the wing screw into the handle support as far as stop and then screw it down – but do not finally tighten yet.
- Line up the handlebar at a right angle to the drive tube – check distance A again.
- Tighten down the wing screw firmly.

6.3.3 Mounting the Control Handle

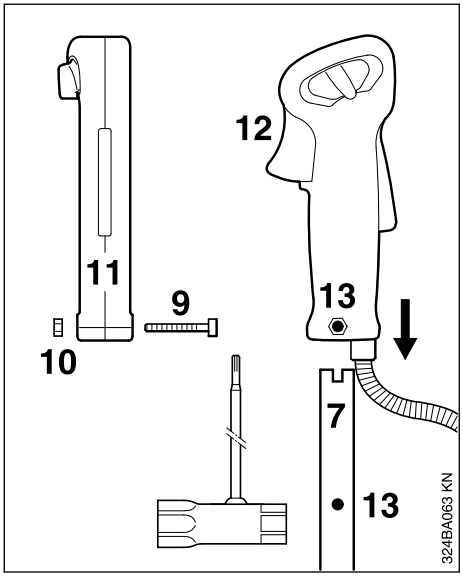

- Take out the screw (9) – the nut (10) remains in the control handle (11).
- Push the control handle onto the handlebar (7) until the holes (13) line up – the throttle trigger (12) must point towards the gearbox.
- Insert the screw (9) and tighten it down firmly.

6.3.4 Fitting the Throttle Cable

NOTICE

Do not kink the throttle cable or lay it in tight radii – make sure the throttle trigger moves freely.

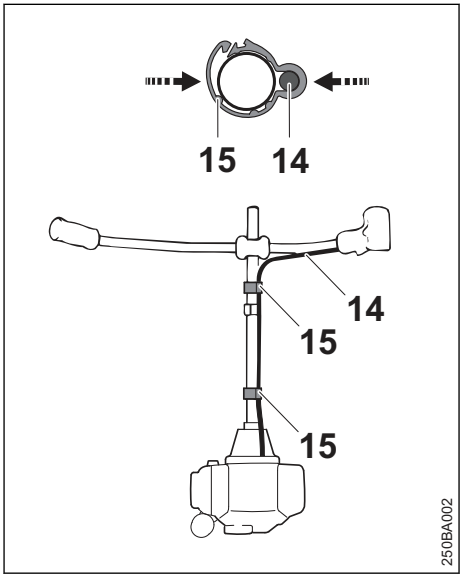

- Position the throttle cable retainer (15) and throttle cable (14) against the drive tube.
- Close the throttle cable retainer (15). The retainer (15) snaps into place.

6.3.5 Adjusting the Throttle Cable

- Check adjustment of throttle cable – see chapter on "Adjusting the Throttle Cable".

6.3.6 Swiveling the Handlebar

Transport position

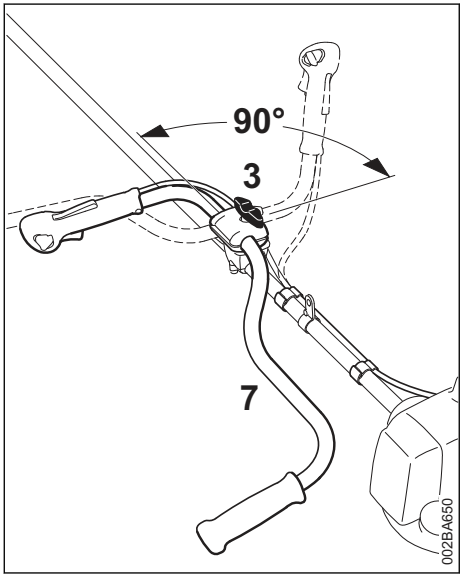

- Loosen the wing screw (3) and unscrew it until the handlebar (7) can be rotated.
- Rotate the handlebar 90° counterclockwise and then swing the handles down.
- Tighten down the wing screw (3) firmly.

Working position

- Reverse the sequence described above to swing the handles up and turn the handlebar clockwise.

7 Mounting the Loop Handle

7.1 Mounting Loop Handle with Barrier Bar

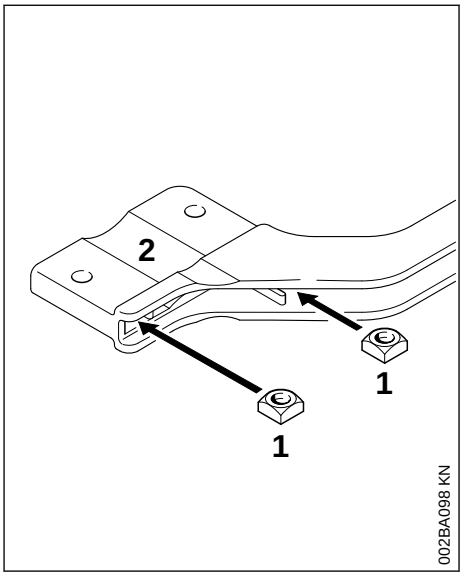

- Fit the square nuts (1) in the barrier bar (2); the holes must line up.

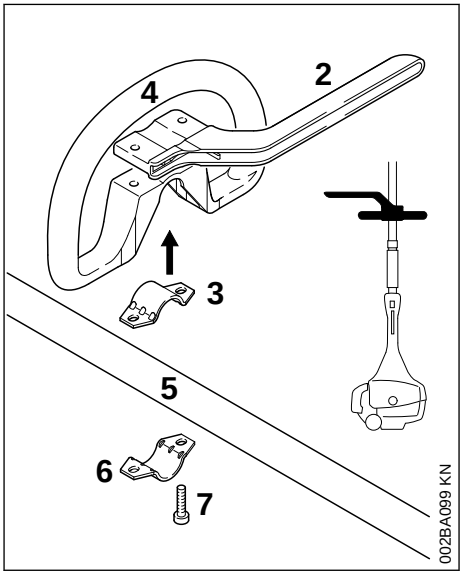

- Place the clamp (3) in the loop handle (4) and position them both against the drive tube (5).
- Position the clamp (6) against the drive tube.

- Place the barrier bar (2) in position as shown.
- Line up the holes.
- Insert the screws (7) in the holes and screw them into the barrier bar (2) as far as stop.
- Go to "Securing the Loop Handle".

7.2 Mounting the Loop Handle without Barrier Bar

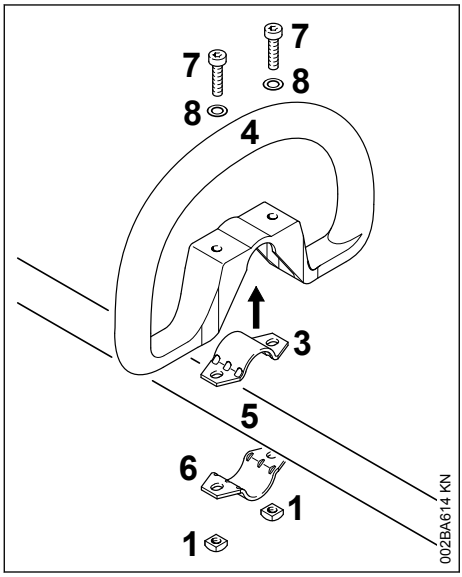

- Place the clamp (3) in the loop handle (4) and position them both against the drive tube (5).
- Position the clamp (6) against the drive tube.
- Line up the holes.
- Fit washers (8) on the screws (7) and insert the screws in the holes. Fit the square nuts (1) and screw them down as far as stop.
- Go to "Securing the Loop Handle".

7.3 Securing the Loop Handle

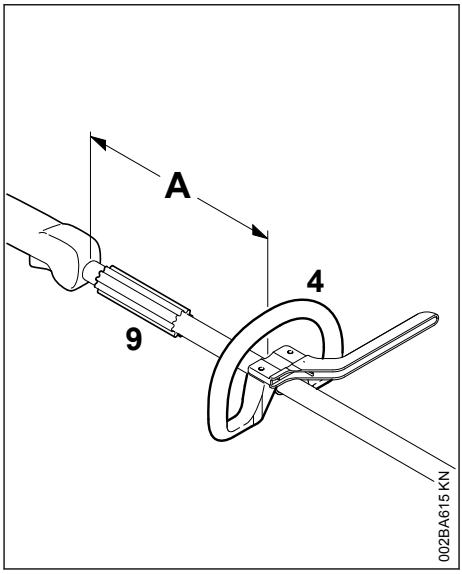

The loop handle can be adjusted to suit the height and reach of the operator and the application by changing distance (A).

Recommendation: distance (A): about 20 cm (8 in)

- Slide the handle to the required position.
- Line up the loop handle (4).
- Tighten down the screws until the loop handle can no longer be rotated on the drive tube. If no barrier bar is fitted – lock the nuts if necessary.

The sleeve (9) (not fitted on all models) must be between the loop handle and the control handle.

8 Adjusting the Throttle Cable

A properly adjusted throttle cable is the precondition for correct operation in the full throttle, starting throttle and idle positions.

Adjust the throttle cable only after the unit is fully assembled – the control handle must be in the normal operating position.

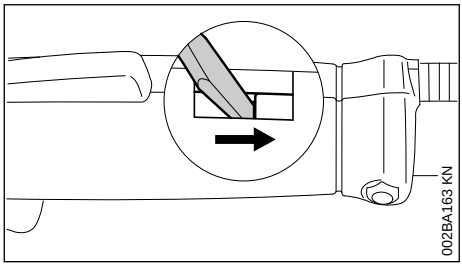

► Use a suitable tool to push the slide to the end of the slot (see illustration).

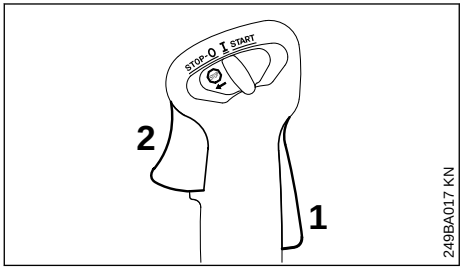

► Press down the throttle trigger lockout (1) and squeeze the throttle trigger (2) (full throttle) – this sets the throttle cable correctly.

9 Fitting the Carrying Ring

9.1 Polymer Version

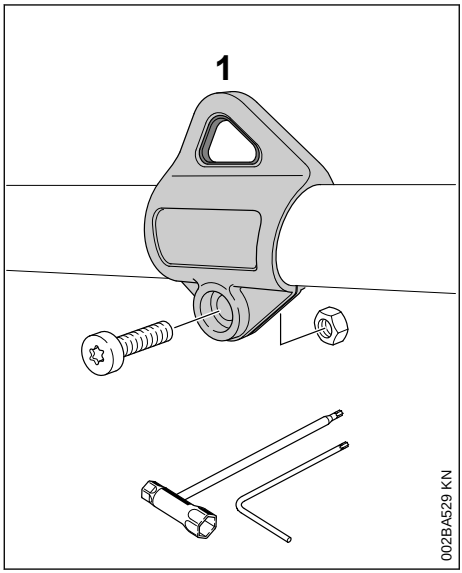

For position of carrying ring see "Main Parts".

► Push the carrying ring (1) over the drive tube.

► Insert the M5 nut in the hex recess in the carrying ring.

► Fit the M5x14 screw.

► Line up the carrying ring.

► Tighten down the screw firmly.

10 Mounting the Deflector

10.1 Mounting the Deflector

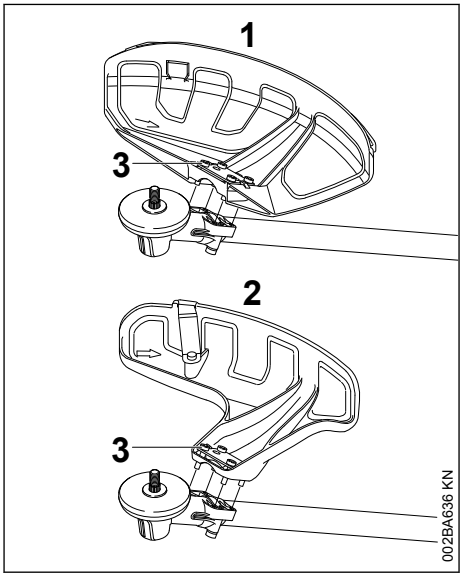

1 Deflector for mowing attachments

2 Deflector for mowing heads

Deflectors (1 and 2) are both mounted to the gearbox in the same way.

► Place the deflector on the gearbox flange.

► Insert the screws (3) and tighten them down firmly.

10.2 Fitting the Skirt and Blade

WARNING

Risk of injury from thrown objects and contact with the cutting attachment. These parts must be fitted to the deflector (**1**) when you use a mowing head.

10.3 Fitting the Skirt

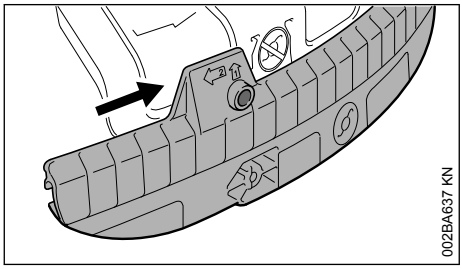

- Slide the lower guide slot of the skirt onto the deflector – it must snap into position.

10.4 Removing the Skirt

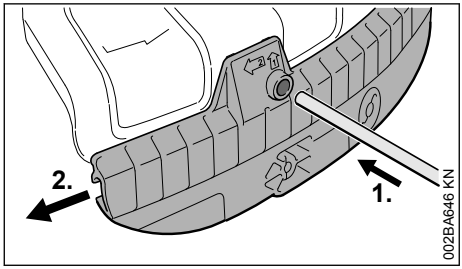

- Insert the stop pin into the hole in the skirt and use it to push the skirt to the left.
- Pull the skirt off the deflector.

10.5 Mounting the Blade

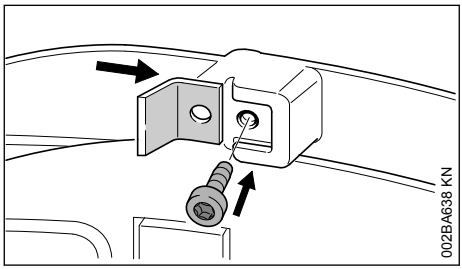

- Slide the line limiting blade into the guide on the skirt.
- Insert the screw and tighten it down firmly.

10.6 Mounting the Limit Stop

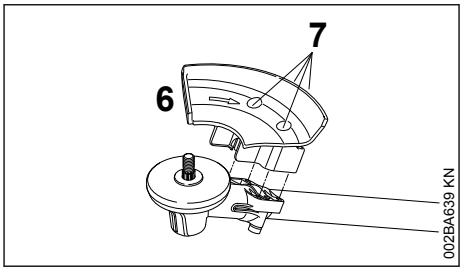

WARNING

Risk of injury from thrown objects and contact with the cutting attachment. Always fit the limit stop (6) when you use a circular saw blade.

- Position the limit stop (6) on the gearbox flange.
- Insert the screws (7) and tighten them down firmly.

11 Mounting the Cutting Attachment

11.1 Placing power tool on the ground

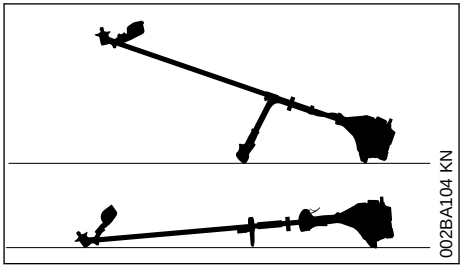

- Shut off the engine.
- Lay your power tool on its back so that the cutting attachment mounting face is pointing up.

11.2 Mounting Hardware for Cutting Attachments

The mounting hardware supplied depends on the cutting attachment that comes as original equipment with the new machine.

11.2.1 Machine Supplied without Mounting Hardware

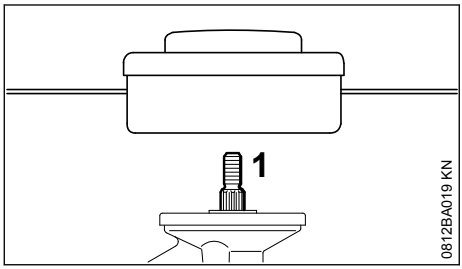

Only mowing heads may be used which mount directly to the shaft (1).

11.2.2 Machine Supplied with Mounting Hardware

Mowing heads and metal cutting attachments may be mounted.

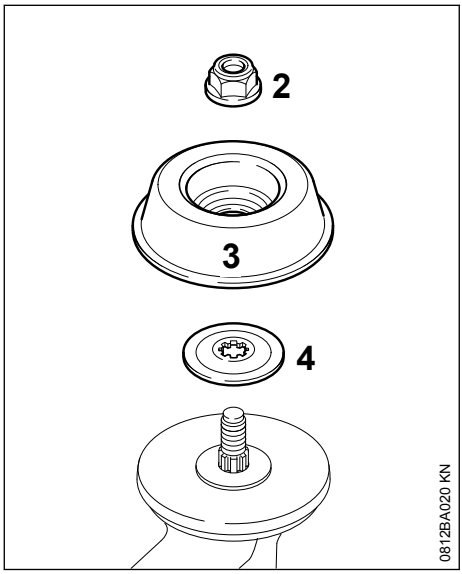

Depending on the cutting attachment, it may be necessary to use the nut (2), rider plate (3) and thrust washer (4).

These parts are included in a kit supplied with the machine and are also available as special accessories.

11.3 Blocking the Shaft

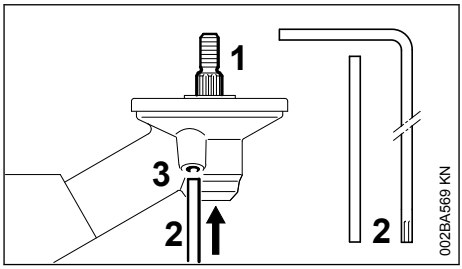

The output shaft (1) must be blocked with the stop pin (2) or screwdriver (2) to mount or remove cutting attachments. These parts come standard with the machine or are available as special accessories.

- ► Insert the stop pin (2) or screwdriver (2) in the hole (3) in the gearbox as far as stop – and apply slight pressure.
- ► Rotate shaft or cutting attachment until the stop pin slips into position and blocks the shaft.

11.4 Removing the Mounting Hardware

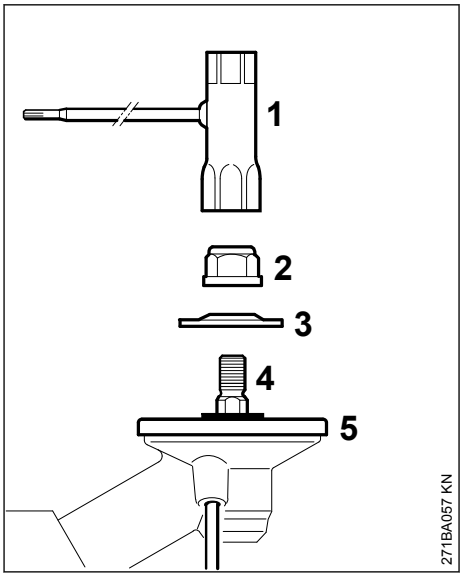

- ► Block the shaft.
- ► Use the combination wrench (1) to loosen and remove the nut (2) clockwise (left-hand thread).
- ► Take the thrust washer (3) off the shaft (4). Do not remove the thrust plate (5).

11.5 Mounting the Cutting Attachment

WARNING

Use a deflector that matches the cutting attachment – see "Mounting the Deflector".

11.6 Fitting the mowing head with screw mounting

Keep the supplement sheet for the mowing head in a safe place.

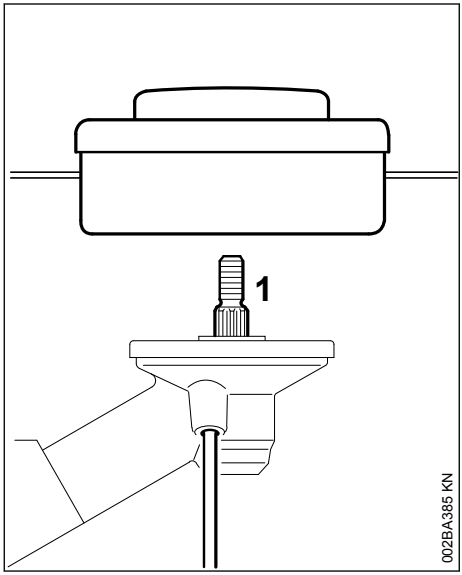

- Fit the thrust plate
- Turn the mowing head anticlockwise on the shaft (1) as far as it will go
- Retain the shaft
- Tighten the mowing head

NOTICE

Remove the tool that was used to block the shaft.

11.7 Removing the Mowing Head

- Retain the shaft
- Turn the mowing head clockwise

11.8 Fitting Mowing Head without Screw Mounting

Keep the instruction leaflet for the mowing head in a safe place.

11.8.1 STIHL FixCut 31-2

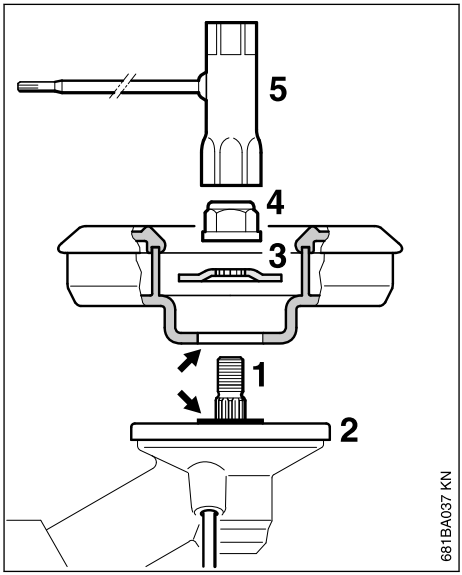

- Fit the thrust plate (2).
- Place the mowing head on the thrust plate (2).

WARNING

Collar (see arrows) must engage the mowing head's mounting hole.

- Push the thrust washer (3) (convex side up) over the shaft (1) until it is seated on the base.
- Block the shaft.
- Use the combination wrench (5) to screw the mounting nut (4) onto the output shaft and it tighten down firmly.

WARNING

If the mounting nut has become too loose, fit a new one.

NOTICE

Remove the tool used to block the shaft.

11.9 Removing the Mowing Head

- Block the shaft.
- Use the combination wrench to loosen and unscrew the mounting nut counterclockwise from the output shaft.

11.10 Mounting Metal Cutting Attachments

Keep the leaflet and packaging of the metal cutting attachment in a safe place.

WARNING

Wear protective gloves to reduce the risk of direct contact with the sharp cutting edges.

Mount only one metal cutting attachment.

Check direction of rotation of cutting attachment

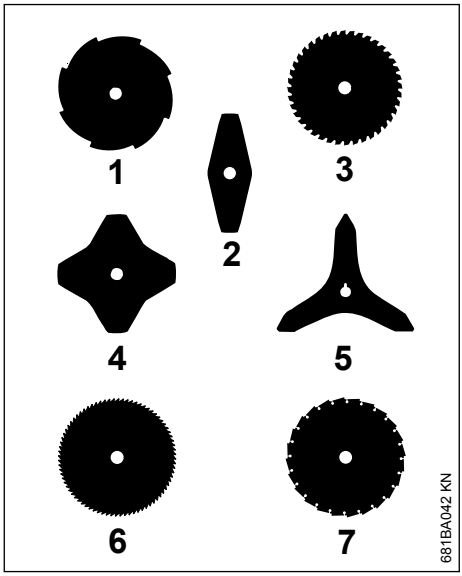

Cutting attachments 2, 4 and 5 may be mounted either way round – they must be turned over regularly to help avoid one-sided wear.

The cutting edges of cutting attachments 1, 3, 6 and 7 must point clockwise.

WARNING

Direction of rotation is indicated by an arrow on the inside of the deflector.

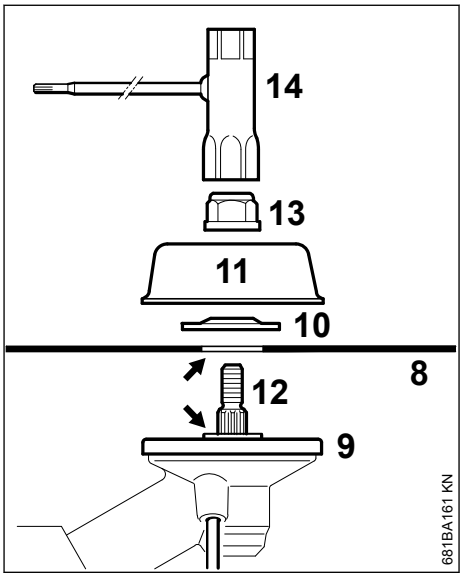

- Place the cutting attachment (8) on the thrust plate (9).

WARNING

Collar (see arrow) must engage the cutting attachment's mounting hole.

Securing the cutting attachment

- Fit the thrust washer (10) – convex side must face up.
- Fit the rider plate (11).
- Block the shaft (12).
- Use the combination wrench (14) to screw the mounting nut (13) on to the output shaft counterclockwise and tighten it down firmly.

WARNING

If the mounting nut has become too loose, fit a new one.

NOTICE

Remove the tool used to block the shaft.

11.11 Removing the Metal Cutting Attachment

WARNING

Wear protective gloves to reduce the risk of direct contact with the sharp cutting edges.

- ► Block the shaft.
- ► Unscrew the mounting nut clockwise.
- ► Remove cutting attachment and its mounting hardware from the gearbox – but **do not** remove the thrust plate (9).

12 Fuel

The engine requires a mixture of gasoline and engine oil.

WARNING

Avoid direct skin contact with fuel and breathing in of gasoline fumes.

12.1 STIHL MotoMix

STIHL recommends using STIHL MotoMix. This pre-blended fuel is free of benzene and lead, is distinguished by a high octane rating, and always provides the proper mixing ratio.

STIHL MotoMix uses STIHL HP Ultra two-stroke engine oil for optimum engine life.

MotoMix is not available in all markets.

12.2 Mixing fuel

NOTICE

Unsuitable fuels or a mixing ratio that deviates from the specification can lead to severe engine damage. The engine, seals, fuel lines and fuel tank may be damaged if low-quality gasoline or engine oil is used.

12.2.1 Gasoline

Use only **high-quality gasoline** with an octane rating of at least 90 ROC – leaded or unleaded.

Gasoline with an alcohol component exceeding 10% can cause impaired engine performance in engines with manually adjustable carburetors and thus should not be used in these engines.

Engines with M-Tronic deliver full engine performance using gasoline with an alcohol component of up to 27% (E27).

12.2.2 Engine oil

If you mix the fuel yourself, use only STIHL two-stroke engine oil or another high-performance engine oil classified as JASO FB, JASO FC, JASO FD, ISO-L-EGB, ISO-L-EGC or ISO-L-EGD.

STIHL specifies STIHL HP Ultra two-stroke engine oil or an equivalent high-performance engine oil in order to maintain emission limits over the machine's service life.

12.2.3 Mixing ratio

with STIHL two-stroke engine oil 1:50; 1:50 = 1 part oil + 50 parts gasoline

12.2.4 Examples

Quantity of gasoline	STIHL two-stroke engine oil 1:50	
Liters	Liters	(ml)
1	0.02	(20)
5	0.10	(100)
10	0.20	(200)
15	0.30	(300)
20	0.40	(400)
25	0.50	(500)

- ► Pour oil into an approved safety fuel canister first, then add gasoline and mix thoroughly

12.3 Storing fuel mixture

Store in approved safety fuel canisters only in a dry, cool and secure place protected against light and sunlight.

Fuel mixture deteriorates with age – mix only as much as needed for a few weeks. Do not store fuel mixture for longer than 30 days. The fuel mixture can become unusable more quickly if exposed to light, sunlight or low or high temperatures.

STIHL MotoMix however can be stored for up to 5 years without any problems.

- ► Shake the canister containing the fuel mixture thoroughly before refueling

WARNING

Pressure may have built up in the canister – open it carefully.

- The fuel tank and the canister in which fuel mixture is stored should be cleaned thoroughly from time to time

Residual fuel and the liquid used for cleaning must be disposed of in accordance with regulations and without harming the environment!

13 Fueling

13.1 Preparations

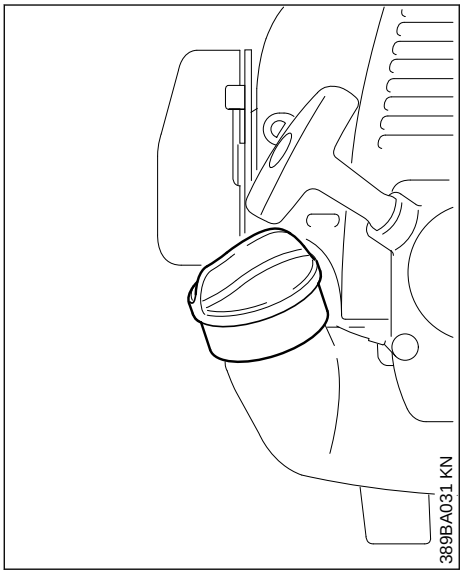

- Before fueling, clean the filler cap and the area around it to ensure that no dirt falls into the tank.
- Position the machine so that the tank cap faces up.

13.2 Filling Up with Fuel

Take care not to spill fuel while fueling and do not overfill the tank. STIHL recommends you use the STIHL filler nozzle for fuel (special accessory).

- Open the tank cap.
- Fill up with fuel.

WARNING

After fueling, tighten down the filler cap as securely as possible by hand.

14 Fitting the Harness

The type and style of the harness/shoulder strap depend on the market.

The use of the shoulder strap is described in the chapter on "Approved Combinations of Cutting Attachment, Deflector, Handle and Harness".

14.1 Shoulder Strap

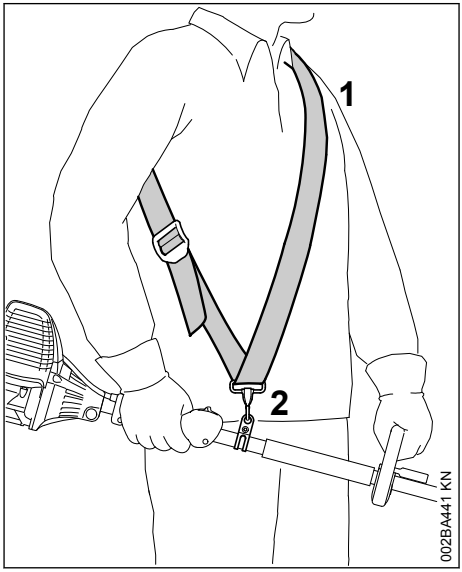

- Put on the shoulder strap (1).
- Adjust the length of the strap so that the carabiner (2) is about a hand's width below your right hip.
- Balance the machine – see "Balancing the Machine".

14.2 Full Harness

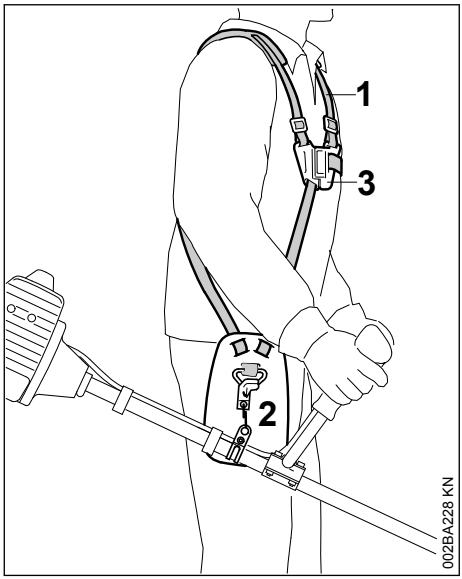

- Put on the harness (1) and close the locking plate (3).
- Adjust the length of the strap – with the machine attached, the carabiner (2) must be about a hand's width below your right hip.
- Balance the machine – see "Balancing the Machine".

14.3 Attaching Machine to Harness

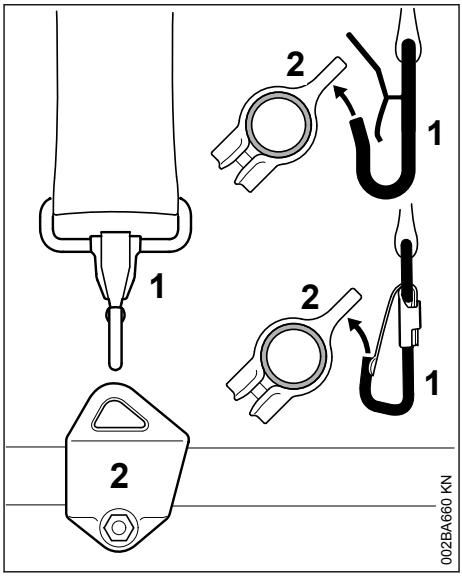

The type and style of the harness and carabiner (spring hook) depend on the market.

- Attach the carabiner (1) to the carrying ring (2) on the drive tube.

14.4 Disconnecting Machine from Harness

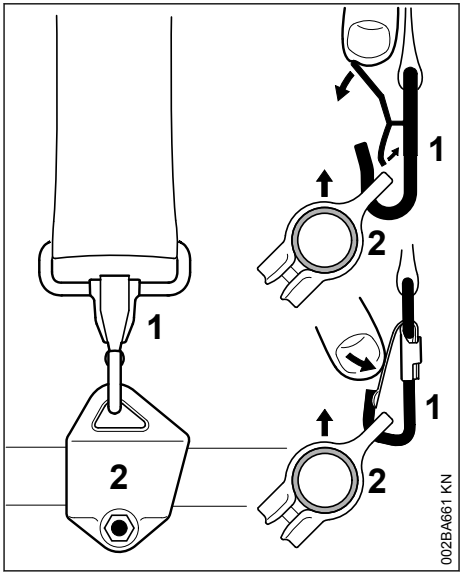

- Press down the bar on the carabiner (1) and pull the carrying ring (2) out of the carabiner.

14.5 Throwing Off the Machine

WARNING

The machine must be quickly thrown off in the event of imminent danger. Practice removing and putting down the machine as you would in an emergency. To avoid damage, do not throw the unit to the ground when practicing.

Practice quickly detaching the power tool from the carabiner as described under "Disconnecting Machine from Harness".

If you are using a shoulder strap: Practice slipping the strap off your shoulder.

If you are using a full harness: Practice quickly opening the locking plate and slipping the harness straps off your shoulders.

15 Balancing the Machine

15.1 Balancing the Machine

The unit is balanced differently depending on the cutting attachment used.

Proceed as follows until the conditions specified under "Floating positions" have been met:

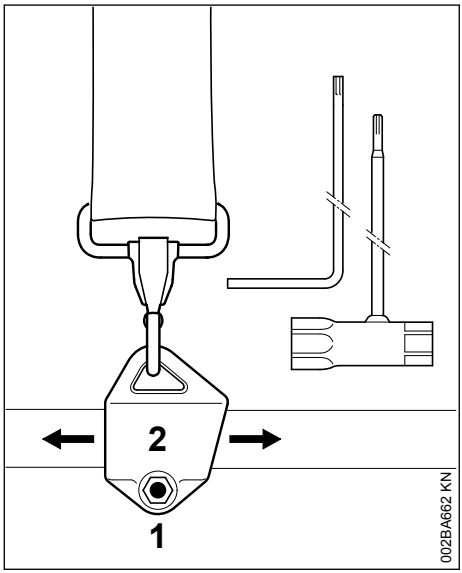

- Loosen the screw (1).
- Slide the carrying ring (2) along the drive tube.
- Tighten the screw moderately.
- Allow the unit to hang freely.
- Check the position obtained.

Balanced positions

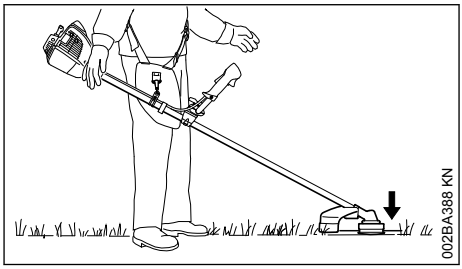

Mowing tools such as mowing heads, grass cutting blades and brush knives

- should just touch the ground.

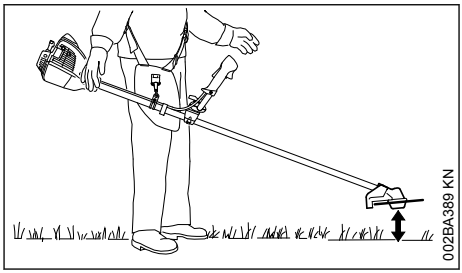

Circular saw blades

- should "hover" about 20 cm (8 in) above the ground.

When the correct floating position has been reached:

- Tighten down the screw on the carrying ring firmly.

16 Starting / Stopping the Engine

16.1 Controls

16.1.1 Control handle on handlebar

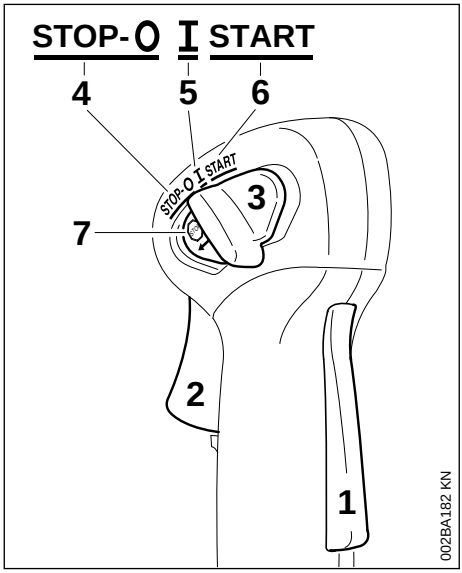

1 Throttle trigger lockout
2 Throttle trigger
3 Slide control

16.1.2 Control handle on drive tube

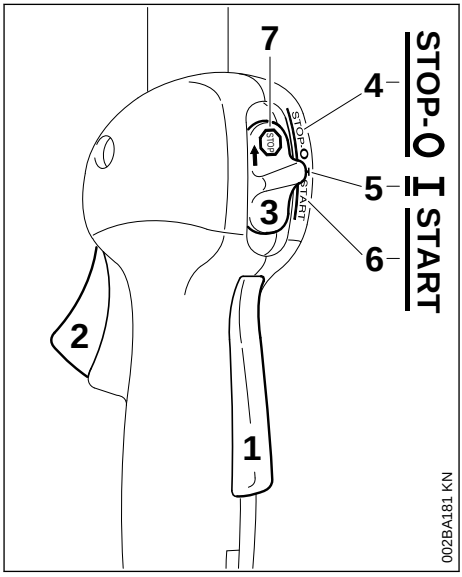

1 Throttle trigger lockout
2 Throttle trigger
3 Slide control

16.1.3 Positions of slide control

4 STOP-0 – engine off – ignition is switched off

5 I – normal run position – the engine is running or can start

6 START – ignition is switched on – the engine can start

16.1.4 Symbol on slide control

7 – stop symbol and arrow. To stop the engine, push the slide control in the direction of the arrow on the stop symbol () to STOP-0.

16.2 Starting

- Press down the trigger lockout lever and squeeze the throttle trigger
- and hold them in that position.
- Move the slide control to **START** and hold it there.
- Now release the throttle trigger, slide control and trigger lockout in that order. This is the **starting throttle position**.

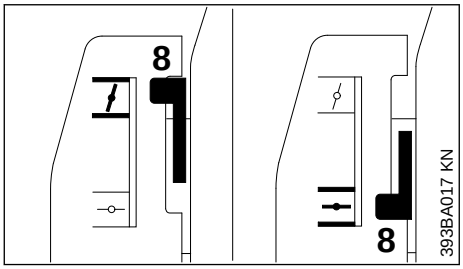

► Set the choke lever (8) to:

if the engine is cold
for warm start – also use this position if the engine has been running but is still cold.

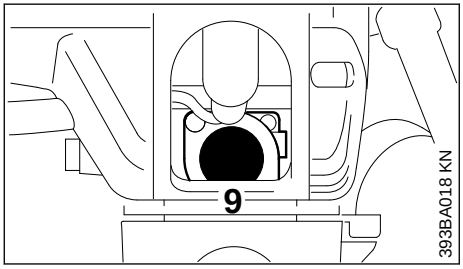

► Press the manual fuel pump bulb (9) at least five times – even if the bulb is filled with fuel.

16.2.1 Cranking

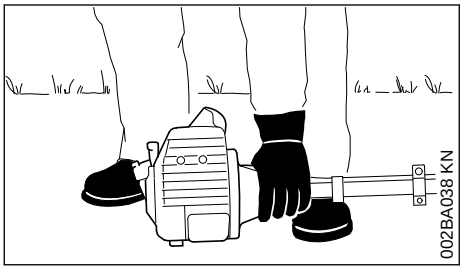

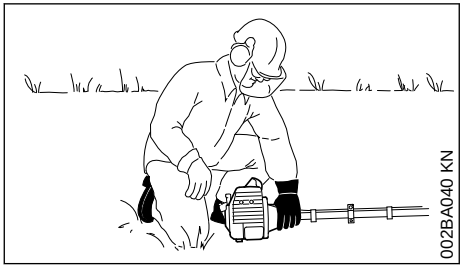

► Place the unit on the ground: It must rest securely on the engine support and the deflector.

► If fitted: Remove the transport guard from the cutting attachment.

To reduce the risk of accidents, check that the cutting attachment is not touching the ground of any other obstacles.

► Make sure you have a firm footing, either standing, stooping or kneeling.

► Hold the unit **firmly** on the ground with your left hand and press down – do not touch the throttle trigger or lockout lever – your thumb should be under the fan housing.

NOTICE

Do not stand or kneel on the drive tube.

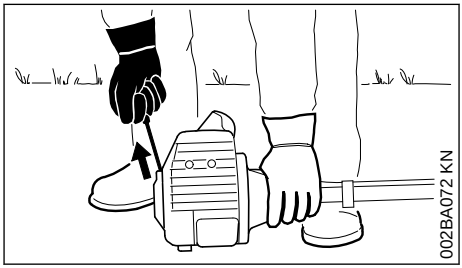

► Hold the starter grip with your right hand.

► Pull the starter grip slowly until you feel it engage and then give it a brisk strong pull.

NOTICE

Do not pull out the starter rope all the way – **it might otherwise break**.

► Do not let the starter grip snap back. Guide it slowly back into the housing so that the starter rope can rewind properly.

► Continue cranking.

16.2.2 When engine begins to fire

► Set the choke lever to .

► continue cranking until the engine runs.

16.2.3 As soon as the engine runs

► Blip the throttle trigger **immediately**. The slide control moves to the normal run position I – and the engine settles down to idle speed.

WARNING

Make sure the carburetor is correctly adjusted. The cutting attachment must not rotate when the engine is idling.

Your machine is now ready for operation.

16.3 Stopping the Engine

- Push the slide control in the direction of the arrow on the stop symbol (STOP) to **STOP-0**.

16.4 At very low outside temperatures

As soon as the engine runs:

- Blip the throttle trigger **to disengage the starting throttle position**. The slide control moves to the normal run position I – and the engine settles down to idle speed.
- Open the throttle slightly.
- Warm up the engine for a short period.

16.5 If engine does not start

16.5.1 Choke lever

If you did not move the choke lever to ⇆ quickly enough after the engine began to fire, the combustion chamber is flooded.

- Set the choke lever to ⇆.
- Set the slide control, lockout lever and throttle trigger to the **starting throttle position**.
- Start the engine by pulling the starter rope briskly – 10 to 20 pulls may be necessary.

16.5.2 If the engine still does not start

- Move the slide control to **STOP-0**.
- Remove the spark plug – see "Spark Plug".
- Dry the spark plug.
- Open the throttle wide.
- Crank the engine several times with the starter to clear the combustion chamber.
- Refit the spark plug – see "Spark Plug".
- Move the slide control to **START**.
- Set the choke lever to ⇆ – even if the engine is cold.
- Now start the engine.

16.5.3 Throttle cable adjustment

- Check adjustment of throttle cable – see chapter on "Adjusting the Throttle Cable".

16.5.4 Fuel tank run until completely dry

- After refueling, press the manual fuel pump bulb at least five times – even if the bulb is filled with fuel.
- Set the choke lever to suit the engine temperature.
- Now start the engine.

17 Transporting the Unit

17.1 Using Transport Guard

The type of transport guard depends on the metal cutting attachment supplied with the machine. Transport guards are available as special accessories.

17.2 230 mm Grass Cutting Blades

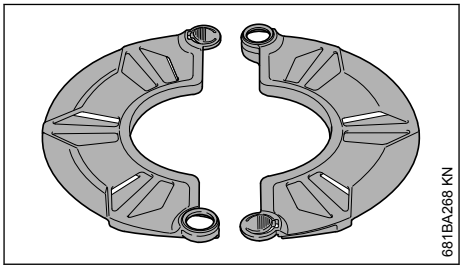

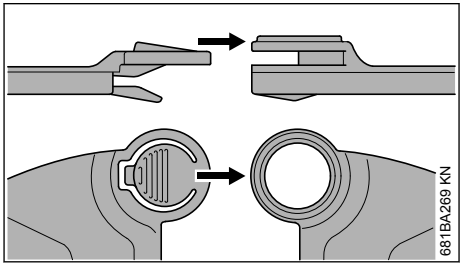

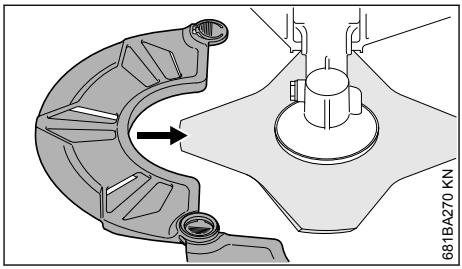

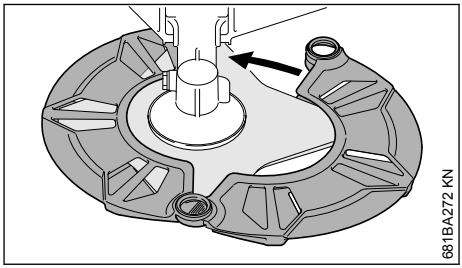

17.3 250 mm Brush Knives

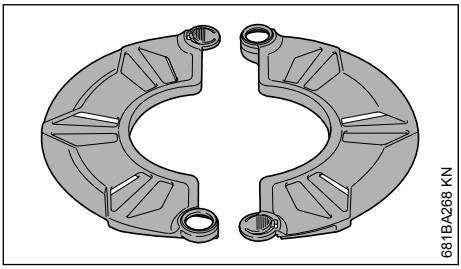

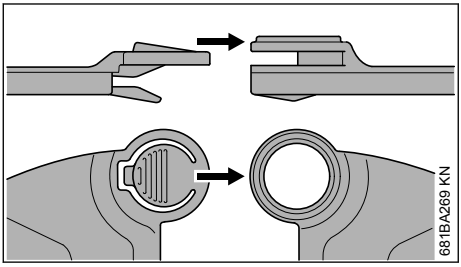

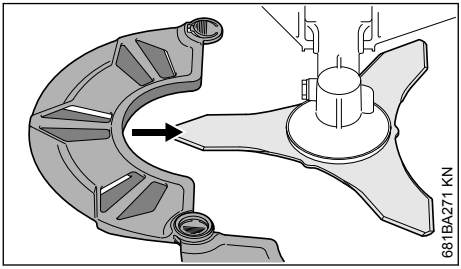

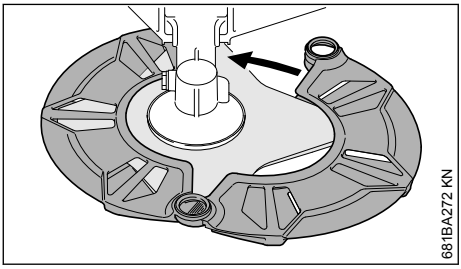

17.4 Grass Cutting Blades up to 260 mm

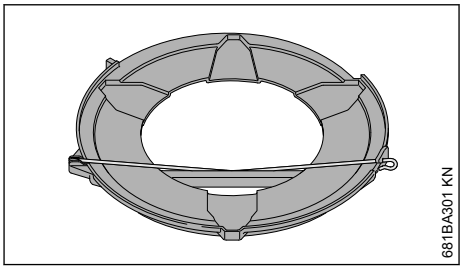

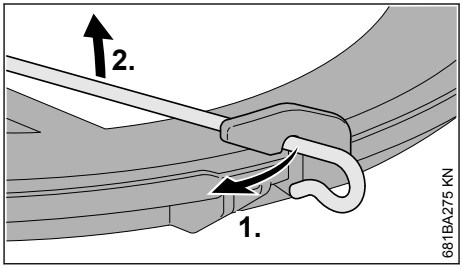

- ► Disconnect wire rod from the transport guard.
- ► Swing wire rod outwards.

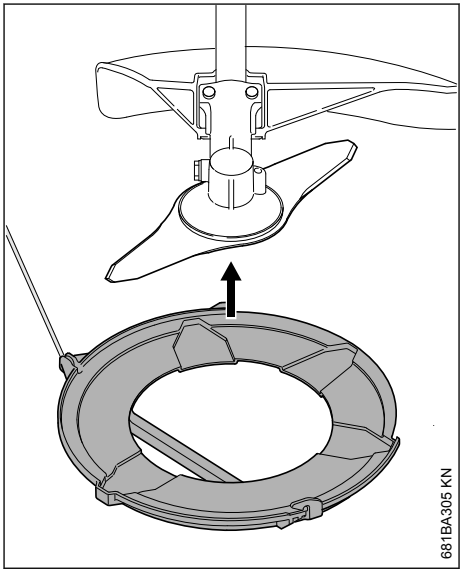

- ► Fit the transport guard on the cutting attachment from below.

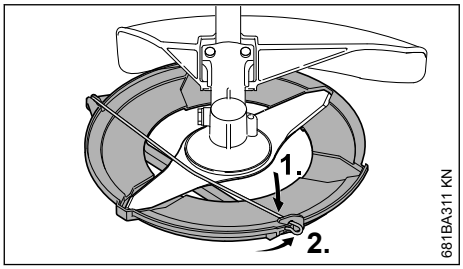

- Swing wire rod into position.
- Hook wire rod to the transport guard.

17.5 Circular Saw Blades

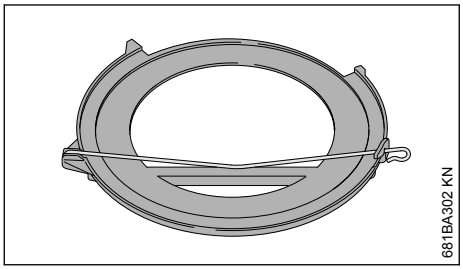

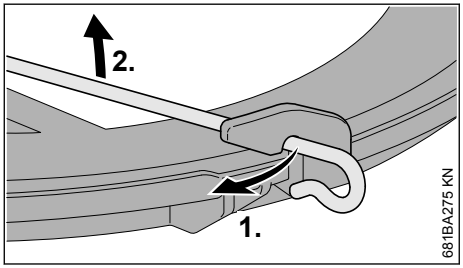

- Disconnect wire rod from the transport guard.

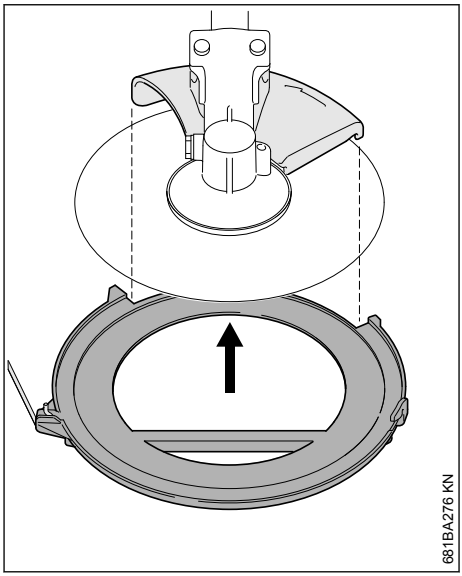

- Swing wire rod outwards.
- Fit transport guard on saw blade from below, making sure the limit stop is properly seated in the recess.

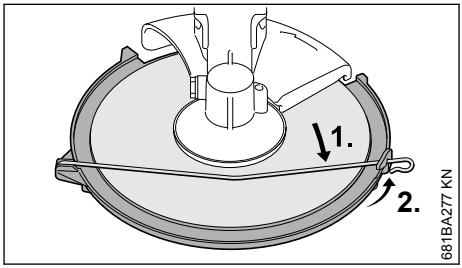

- Swing wire rod into position.
- Hook wire rod to the transport guard.

18 Operating Instructions

18.1 During break-in period

A factory-new machine should not be run at high revs (full throttle off load) for the first three tank fillings. This avoids unnecessary high loads during the break-in period. As all moving parts have to bed in during the break-in period, the frictional resistances in the engine are greater during this period. The engine develops its maximum power after about 5 to 15 tank fillings.

18.2 During Operation

After a long period of full throttle operation, allow the engine to run for a short while at idle speed so that engine heat can be dissipated by the flow of cooling air. This protects engine-mounted components (ignition, carburetor) from thermal overload.

18.3 After Finishing Work

Storing for a short period: Wait for the engine to cool down. Empty the fuel tank and keep the machine in a dry place, well away from sources of ignition, until you need it again. For longer out-of-service periods – see "Storing the Machine".

19 Cleaning the Air Filter

Dirty air filters reduce engine power, increase fuel consumption and make starting more difficult.

19.1 If there is a noticeable loss of engine power

- Set the choke lever to ⊼.

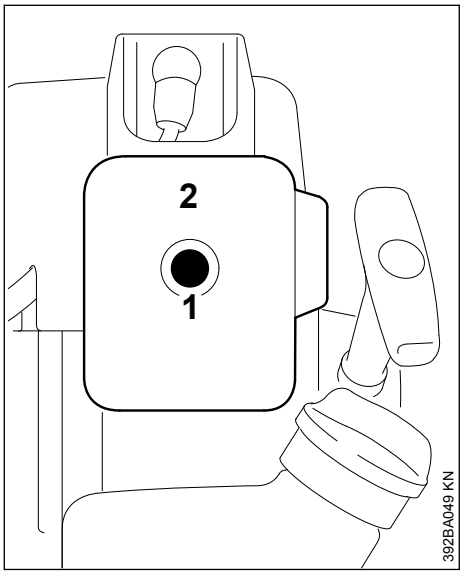

- Loosen the screw (1) and remove the filter cover (2).
- Clean away loose dirt from around the filter.
- Remove the foam and felt filter elements.
- Wash the foam element in a clean, non-flammable solution (e.g. warm soapy water) and then dry.
- Fit a new felt element – do not wash. As a temporary measure you can knock it out on the palm of your hand or blow it out with compressed air.

Replace any damaged parts.

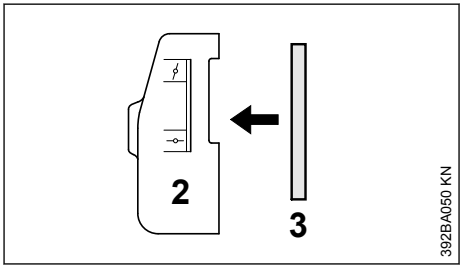

- Fit the foam filter element (3) in the filter cover.

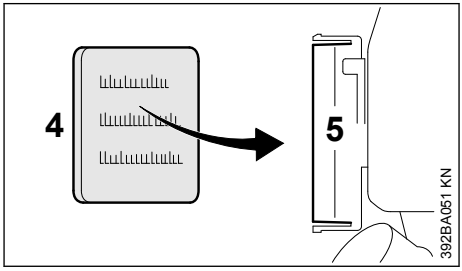

- Place the felt element (4) (lettering facing inwards) in the filter housing (5).
- Fit the filter cover.
- Tighten down the screw in the filter cover firmly.

20 Adjusting the Carburetor

The carburetor comes from the factory with a standard setting.

This setting provides an optimum fuel-air mixture under most operating conditions.

With this carburetor it is only possible to adjust the high speed screw within fine limits.

20.1 Standard Setting

- Shut off the engine.
- Mount FS cutting attachment, power tool attachment or KombiTool.
- Check the air filter and clean or replace as necessary.
- Check that the throttle cable is properly adjusted – readjust if necessary – see chapter on "Adjusting the Throttle Cable".
- Check the spark arresting screen and clean or replace as necessary.

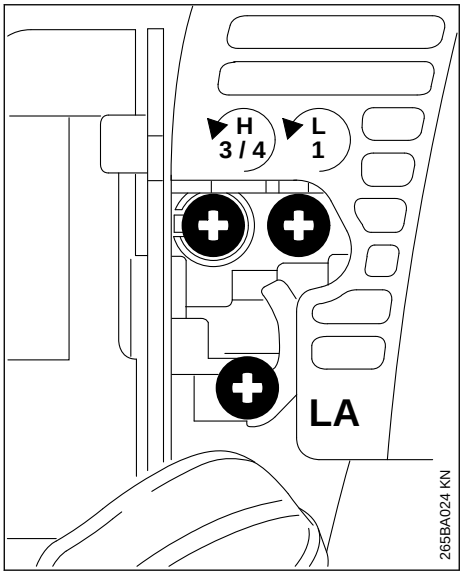

- Turn high speed screw (H) counterclockwise as far as stop (no more than 3/4 turn).
- Turn the low speed screw (L) carefully clockwise as far as stop, then turn it back 1 turn
- Start and warm up the engine.
- Adjust idle speed with the idle speed screw (LA) so that the cutting attachment does not run.

20.2 Fine Tuning

A slight correction of the setting of the high speed screw (H) may be necessary if engine power is not satisfactory when operating at high altitude, sea level or after changing the cutting attachment.

Rule of thumb:

Turn the high speed screw (H) about one quarter turn for every 1000 m (3300 ft) change in altitude.

Conditions for adjustment

WARNING

Adjust the high speed screw (H) only if you are using a mowing head, making sure the cutting lines are full length (as far as the line limiter blade on the deflector).

If a metal cutting attachment is mounted, use the standard setting and adjust the high speed screw (H) as described above under "Rule of thumb".

- Carry out the standard setting.
- Start the engine and, with the mowing head mounted, warm it up for about 3 minutes.
- Open the throttle wide.

20.2.1 At high altitude

- Turn the high speed screw (H) clockwise (leaner), no further than stop, until there is no noticeable increase in engine speed.

20.2.2 At sea level

- Turn the high speed screw (H) counterclockwise (richer), no further than stop, until there is no noticeable increase in engine speed.

It is possible that maximum engine speed may be reached with the standard setting in each case.

20.3 Adjust idle speed

It is usually necessary to change the setting of the idle speed screw (LA) after every correction to the low speed screw (L).

- Warm up the engine.

20.3.1 Engine stops while idling

- Turn the idle speed screw (LA) slowly clockwise until the engine runs smoothly – the cutting attachment must not run.

20.3.2 Cutting attachment runs when engine is idling

- Turn the idle speed screw (LA) counterclockwise until the cutting attachment stops moving and then rotate the screw another 1/2 to 1 turn in the same direction.

WARNING

If the cutting attachment continues to run when the engine is idling, have your machine checked and repaired by your servicing dealer.

20.3.3 Erratic idling behavior, engine stops even though setting of LA screw has been corrected, poor acceleration

Idle setting is too lean

- Idle setting is too lean: Rotate the low speed screw (L) about 1/4 turn counterclockwise until the engine runs and accelerates smoothly.

20.3.4 Erratic idling behavior

Idle setting is too rich:

- Rotate the low speed screw (L) about 1/4 turn clockwise until the engine runs and accelerates smoothly.

21 Spark Plug

- If the engine is down on power, difficult to start or runs poorly at idle speed, first check the spark plug.
- Fit a new spark plug after about 100 operating hours – or sooner if the electrodes are badly eroded. Install only suppressed spark plugs of the type approved by STIHL – see "Specifications".

21.1 Removing the Spark Plug

- Move the slide control to **STOP-0**.

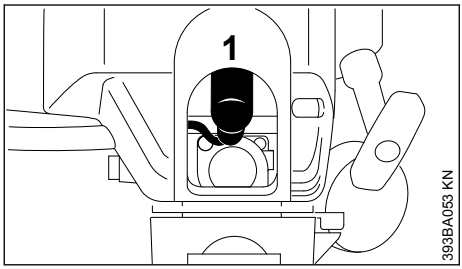

- Pull off the spark plug boot (1).
- Unscrew the spark plug.

21.2 Checking the Spark Plug

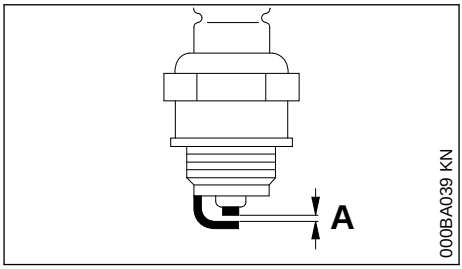

- Clean dirty spark plug.
- Check electrode gap (A) and readjust if necessary – see "Specifications".
- Rectify the problems which have caused fouling of the spark plug.

Possible causes are:

– Too much oil in fuel mix.
– Dirty air filter.
– Unfavorable running conditions.

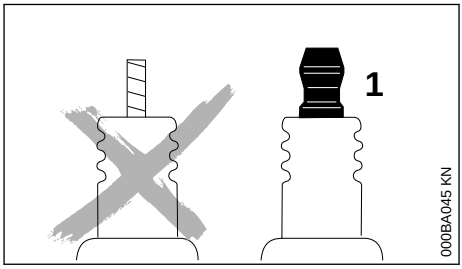

WARNING

Arcing may occur if the adapter nut (1) is loose or missing. Working in an easily combustible or explosive atmosphere may cause a fire or an explosion. This can result result in serious injuries or damage to property.

- Use resistor type spark plugs with a properly tightened adapter nut.

21.3 Installing the spark plug

- Screw home the spark plug, fit the boot and press it down firmly.

22 Lubricating the Gearbox

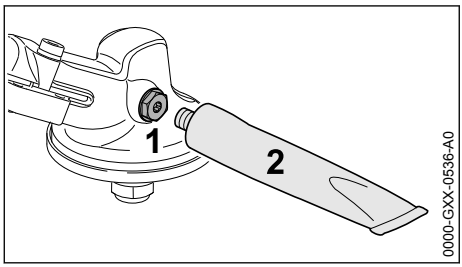

Check grease level after every 25 hours of operation and re-lubricate if necessary.

- ► Remove the screw plug (1).
- ► If no grease can be seen on the inside of the screw plug (1): Screw the tube (2) of STIHL gear lubricant (special accessory) into the filler hole.
- ► Squeeze no more than 5 g (1/5 oz) grease into the gearbox.

NOTICE

Do not completely fill the gearbox with grease.

- ► Unscrew the tube (2).
- ► Insert the screw plug (1) and tighten it down firmly.

23 Replacing the Starter Rope and Rewind Spring

23.1 Removing the Starter Cover

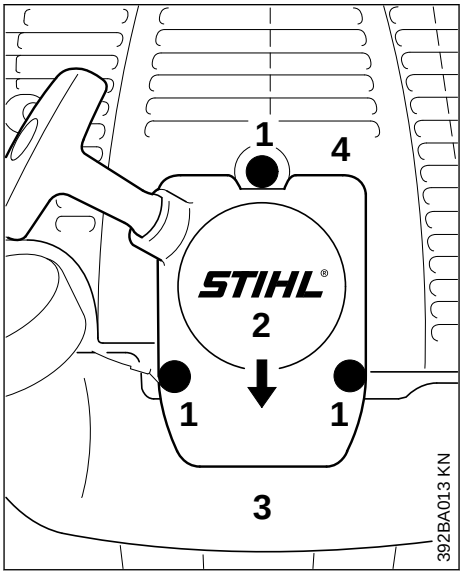

- ► Take out the screws (1).
- ► Lift the cover (2) away from the tank (3) and pull it out from under the shroud (4).

23.2 Removing the Rope Rotor

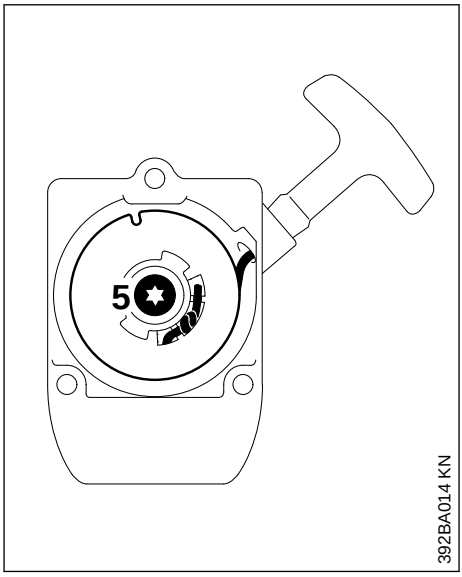

- Take out the screw (5) and remove the rope rotor.

WARNING

The rewind spring is seated in the rope rotor and may pop out and uncoil if care is not taken. The pieces of broken spring may be under tension and fly apart unexpectedly when you remove the rope rotor – **to help reduce the risk of injury**, wear a face shield and work gloves.

23.3 Replacing the Starter Rope

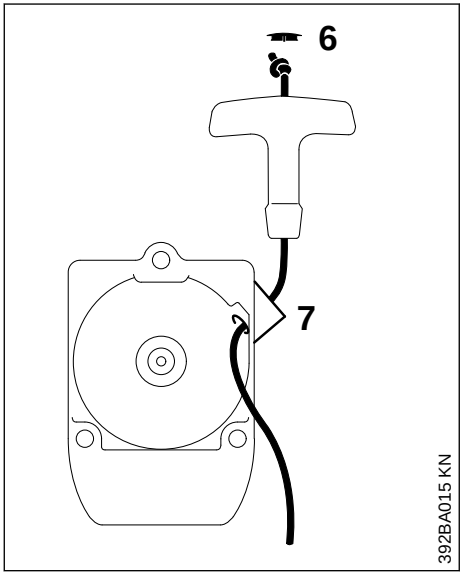

- Use a screwdriver to pry the cap (6) out of the starter grip.
- Remove the remaining rope from the rotor and grip, making sure the ElastoStart sleeve is not pushed out of the grip.
- Tie a simple overhand knot in the new rope and then thread it through the top of the grip and the rope bushing (7).
- Refit the cap in the grip.

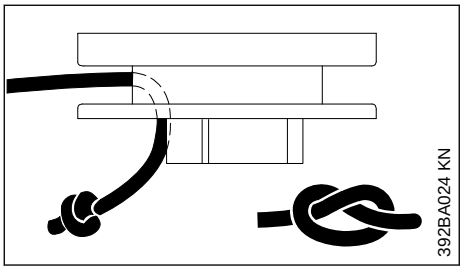

- Thread the rope through the rotor and secure it with a simple overhand knot.
- Go to "Installing the Rope Rotor".

23.4 Replacing a Broken Rewind Spring

Two types of replacement springs are available from the factory:
– A ready-to-fit rewind spring secured with a wire retainer.
– A rope rotor with pre-installed rewind spring.

23.4.1 Installing the ready-to-fit rewind spring

- Lubricate the spring with a few drops of resin-free oil – see "Special Accessories" – do not open the wire retainer!
- Carefully remove the parts of the old spring from the starter cover and rope rotor.
- Insert the new rewind spring in the rope rotor and, at the same time, engage the outer spring loop in the rotor's recess – the wire retainer slips off in this process. If the spring pops out and uncoils, refit it in the counter-clockwise direction, starting outside and working inwards.
- Go to "Installing the Rope Rotor".

23.4.2 Installing rope rotor with rewind spring

- Carefully unpack the new rope rotor with rewind spring. The spring may pop out if not handled with care –**risk of injury.**
- Lubricate the spring with a few drops of resin-free oil – see "Special Accessories".
- Go to "Installing the Rope Rotor".

23.5 Installing the Rope Rotor

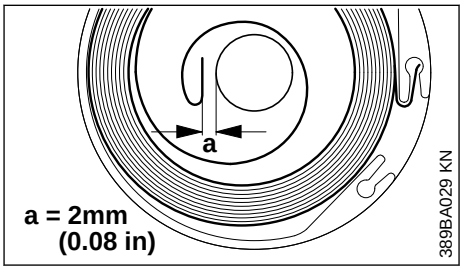

- Check dimension "a" for inner spring anchor loop and bend it slightly if necessary.
- Coat rope rotor bearing bore with resin-free oil – see "Special Accessories".

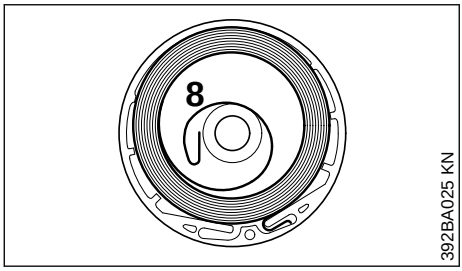

- Slip the rotor over the starter post – turn it back and forth to engage the anchor loop (8) of the rewind spring.
- Insert the screw (5) and tighten it down firmly.
- Go to "Tensioning the Rewind Spring".

23.6 Tension the rewind spring.

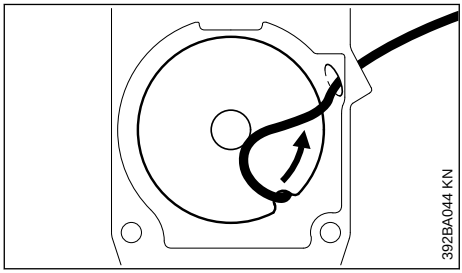

- Make a loop in the unwound starter rope and use it to turn the rope rotor six full revolutions counterclockwise.
- Hold the rotor steady. Pull out and straighten the twisted rope.
- Release the rope rotor.
- Release the rope slowly so that it winds onto the rotor.
- Check spring tension:
  - The starter grip must be firmly seated in the rope bushing. If the grip droops to one side: Add one more turn on rope rotor to increase spring tension
  - When the starter rope is fully extended it must still be possible to rotate the rotor another half turn. If this is not the case, the spring is overtensioned **and could break**. Take one turn of the rope off the rotor.
- Go to "Fitting the Starter Cover".

23.7 Fitting the Starter Cover

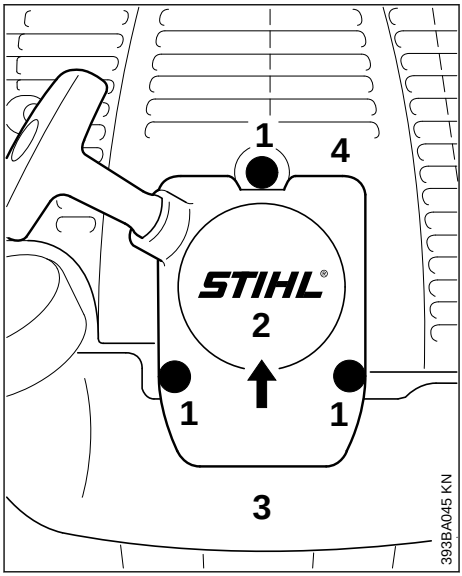

- Push the upper mounting boss of the cover (2) under the shroud (4).
- Line up the tank and push the bottom of the cover onto the tank.
- Insert the screws (1) and tighten them down firmly.

24 Storing the Machine

If out of use for periods of about 30 days or longer

- Drain and clean the fuel tank in a well-ventilated area.
- Dispose of fuel properly in accordance with local environmental requirements.
- If a manual fuel pump is fitted: Press the manual fuel pump at least 5 times.
- Start the engine and run it at idling speed until it stops
- Remove, clean and inspect the cutting attachment. Treat metal cutting attachments with protective oil.
- Thoroughly clean the machine
- Cleaning the Air Filter
- Store the machine in a dry and safe place, out of the reach of children and other unauthorized users

25 Sharpening Metal Cutting Blades

- Use a sharpening file (see "Special Accessories") to sharpen dull cutting attachments. In case of more serious wear or nicks: Resharpen with a grinder or have the work done by a dealer – STIHL recommends a STIHL servicing dealer.
- Sharpen frequently, take away as little metal as possible – two or three strokes of the file are usually enough.

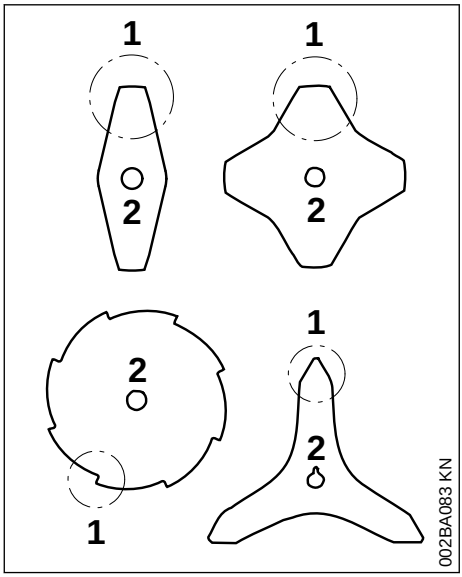

- Resharpen the teeth (1) uniformly – do not alter the contour of the parent blade (2) in any way.

See cutting attachment packaging for additional sharpening instructions. Keep the packaging for future reference.

25.1 Balancing

- After resharpening about 5 times, check the cutting attachment for out-of-balance on a STIHL balancer – see “Special Accessories” – or have it checked by a dealer and re-balanced as necessary – STIHL recommends a STIHL servicing dealer.

26 Maintaining the Mowing Head

26.1 Placing power tool on the ground

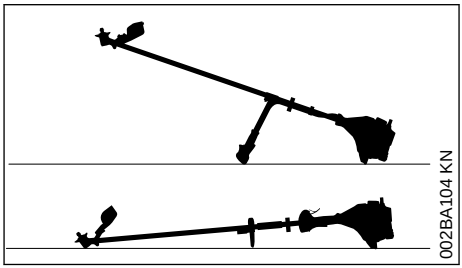

- Shut off the engine.
- Lay your power tool on its back so that the cutting attachment mounting face is pointing up.

26.2 Replacing Nylon Line

Always check the mowing head for signs of wear before replacing the nylon line.

WARNING

If there are signs of serious wear, replace the complete mowing head.

The nylon mowing line is referred to as "nylon line" or "line" in the following.

The mowing head is supplied with illustrated instructions for replacing the nylon line. Keep the instructions for the mowing head in a safe place.

- If necessary, remove the mowing head.

26.3 Adjusting Nylon Line

STIHL SuperCut

Fresh line is advanced automatically if the remaining line is at least 6 cm (2 1/2 in) long. The blade on the deflector trims overlong lines to the correct length.

STIHL AutoCut

- With the engine running, hold the rotating mowing head above the grass surface.
- Tap it on the ground once – fresh line is advanced and the blade on the deflector trims it to the right length.

Fresh line is advanced every time the mowing head is tapped on the ground. For this reason observe the mowing head's cutting performance during operation. If the mowing head is tapped on the ground too often, the line limiting blade

will unnecessarily cut off unused lengths of nylon line.

Line feed operates only if both lines are still at least 2.5 cm (1 in) long.

26.4 Replacing Nylon Line

STIHL PolyCut

Precut lengths of nylon line can be fitted to the PolyCut in place of the cutting blades.

STIHL DuroCut, STIHL FixCut 31-2, STIHL PolyCut

WARNING

To reduce the risk of injury, always shut off the engine before refilling the mowing head.

- Fit precut lengths of nylon line in the mowing head as described in the instructions supplied.

26.5 Replacing Cutting Blades

26.5.1 STIHL PolyCut

Always check the mowing head for signs of wear before installing new cutting blades.

WARNING

If there are signs of serious wear, replace the complete mowing head.

The thermoplastic cutting blades are referred to as "blades" in the following.

The mowing head is supplied with illustrated instructions for replacing the blades. Keep the instructions for the mowing head in a safe place.

WARNING

To reduce the risk of injury, always shut off the engine before installing the blades.

- Remove the mowing head.
- Replace blades as shown in the illustrated instructions.
- Mount the mowing head on the machine.

27 Inspection and Maintenance by User

27.1 Changing the Fuel Pickup Body

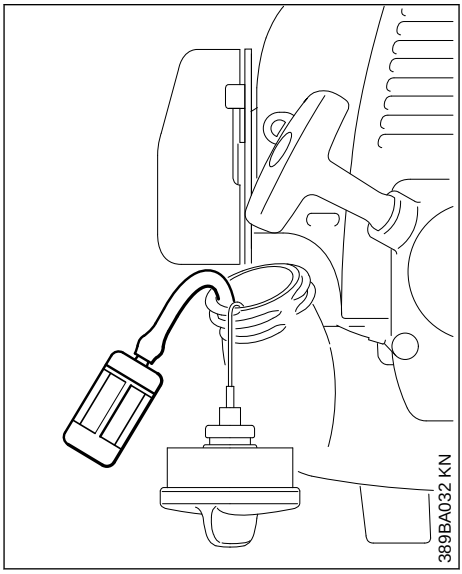

Change the fuel pickup body every year:

- Drain the fuel tank.
- Use a hook to pull the fuel pickup body out of the tank and take it off the hose.
- Push the new pickup body into the hose.
- Place the pickup body in the tank.

27.2 Spark Arresting Screen in Muffler

If the engine is down on power, check the spark arresting screen in the muffler.

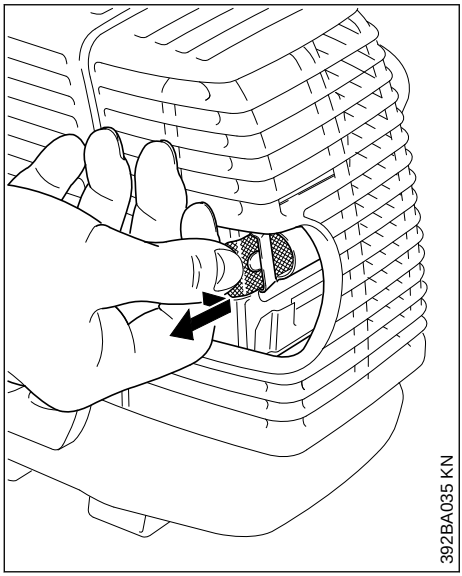

- Lift the spark arresting screen and pull it out.
- Clean the spark arresting screen. If the screen is damaged or heavily carbonized, fit a new one.
- Refit the spark arresting screen.

28 Inspections and Maintenance by Dealer

28.1 Maintenance Work

STIHL recommends that you have servicing and repair work carried out exclusively by an authorized STIHL servicing dealer.

28.2 Antivibration Element

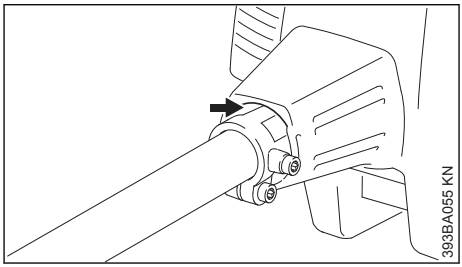

A vibration-absorbing rubber element is installed between the powerhead and the drive tube. Have it checked if there are signs of wear or a noticeable increase in vibration levels.

29 Maintenance and Care

The following intervals apply to normal operating conditions only. If your daily working time is longer or operating conditions are difficult (very dusty work area, etc.), shorten the specified intervals accordingly.		**before starting work**	**after finishing work or daily**	**after each refueling stop**	**weekly**	**monthly**	**every 12 months**	**if problem**	**if damaged**	**as required**
Complete machine	Visual inspection (condition, leaks)	X		X						
	Clean		X							
	Replace any damaged parts	X							X	
Control handle	Check operation	X		X						
Air filter	Visual inspection					X		X		
	Clean							X		X
	Replace								X	
Manual fuel pump (if fitted)	Check	X								
	Have repaired by servicing dealer[1)]								X	
Pickup body (filter) in fuel tank	Check							X		
	Replace						X		X	X

The following intervals apply to normal operating conditions only. If your daily working time is longer or operating conditions are difficult (very dusty work area, etc.), shorten the specified intervals accordingly.		before starting work	after finishing work or daily	after each refueling stop	weekly	monthly	every 12 months	if problem	if damaged	as required
Fuel tank	Clean							X		X
Carburetor	Check idle adjustment – the cutting attachment must not rotate	X		X						
	Adjust idle speed									X
Spark plug	Adjust electrode gap							X		
	Replace after every 100 operating hours									
Cooling inlets	Visual inspection		X							
	Clean									X
Spark arresting screen in muffler	Check							X		X
	Clean or replace								X	X
All accessible screws and nuts (not adjusting screws)	Re-tighten									X
Antivibration elements	Check[2)]	X						X		X
	Have replaced by servicing dealer[1)]								X	
Cutting attachment	Visual inspection	X		X						
	Replace								X	
	Check tightness	X		X						
Metal cutting attachment	Sharpen	X								X
Gearbox lubrication	Check				X					
	Replenish									X
Safety labels	Replace								X	

[1)]STIHL recommends an authorized STIHL servicing dealer.
[2)]see chapter "Inspections and Maintenance by Dealer", section "Antivibration Elements"

30 Minimize Wear and Avoid Damage

Observing the instructions in this manual helps reduce the risk of unnecessary wear and damage to the power tool.

The power tool must be operated, maintained and stored with the due care and attention described in this owner's manual.

The user is responsible for all damage caused by non-observance of the safety precautions, operating and maintenance instructions in this manual. This includes in particular:

– Alterations or modifications to the product not approved by STIHL.
– Using tools or accessories which are neither approved or suitable for the product or are of a poor quality.
– Using the product for purposes for which it was not designed.
– Using the product for sports or competitive events.
– Consequential damage caused by continuing to use the product with defective components.

30.1 Maintenance Work

All the operations described in the "Maintenance Chart" must be performed on a regular basis. If these maintenance operations cannot be performed by the owner, they should be performed by a servicing dealer.

STIHL recommends that you have servicing and repair work carried out exclusively by an authorized STIHL servicing dealer. STIHL dealers are regularly given the opportunity to attend training courses and are supplied with the necessary technical information.

If these maintenance operations are not carried out as specified, the user assumes responsibility for any damage that may occur. Among other parts, this includes:
– Damage to the engine due to neglect or deficient maintenance (e.g. air and fuel filters), incorrect carburetor adjustment or inadequate cleaning of cooling air inlets (intake ports, cylinder fins).
– Corrosion and other consequential damage resulting from improper storage.
– Damage to the machine resulting from the use of poor quality replacement parts.

30.2 Parts Subject to Wear and Tear

Some parts of the power tool are subject to normal wear and tear even during regular operation in accordance with instructions and, depending on the type and duration of use, have to be replaced in good time. Among other parts, this includes:
– Cutting attachments (all types)
– Mounting hardware for cutting attachments (rider plate, nut, etc.)
– Deflectors for cutting attachments
– Clutch
– Filters (air, fuel)
– Rewind starter
– Spark plug
– Antivibration elements

31 Main Parts

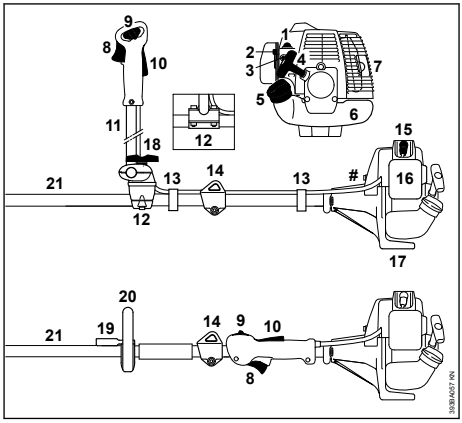

1 Manual fuel pump
2 Choke lever
3 Carburetor adjusting screws
4 Starter grip
5 Tank cap
6 Fuel tank
7 Muffler with spark arresting screen
8 Throttle trigger
9 Slide control
10 Throttle trigger lockout
11 Bike handle (handlebar)
12 Handle support
13 Throttle cable retainer
14 Carrying ring (not all markets, country-specific)
15 Spark plug boot
16 Air filter cover
17 Machine support
18 Wing screw
19 Barrier bar (country specific)
20 Loop handle
21 Drive tube
Serial number

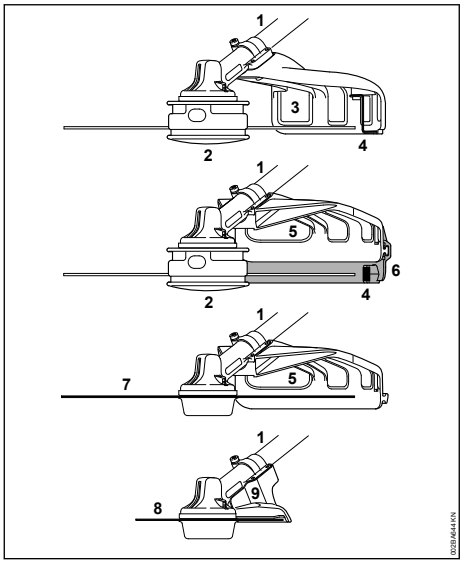

1 Drive tube
2 Mowing head
3 Deflector for mowing heads only
4 Line limiting blade
5 Deflector for all mowing attachments
6 Skirt for mowing heads
7 Metal mowing attachment
8 Circular saw blade
9 Limit stop for circular saw blades only

32 Specifications

32.1 Engine

Single-cylinder two-stroke engine

Displacement:	25.4cm^3
Cylinder bore:	34 mm
Piston stroke:	28 mm
Engine power:	0.95 kW (1.3 hp) at 8500 rpm
Idle speed:	2800 rpm
Cut-off speed (nominal value):	10500 rpm
Max. output shaft speed (cutting attachment):	8150 rpm

32.2 Ignition system

Electronic magneto ignition

Spark plug (suppressed):	Bosch WSR 6 F, NGK BPMR 7 A
Electrode gap:	0.5 mm

32.3 Fuel system

All-position diaphragm carburetor with integral fuel pump

Fuel tank capacity: 440 cm^3 (0.44 l)

32.4 Weight

Dry, without cutting attachment and deflector

FS 85:	5.2 kg
FS 85 R:	4.9 kg

32.5 Overall length

without cutting attachment: 1760 mm

32.6 Equipment features

R Loop handle

32.7 Noise and vibration values

For further details on compliance with Vibration Directive 2002/44/EC, see

www.stihl.com/vib

32.7.1 Cutting attachment

The idle and nominal maximum speed operating states are given equal consideration when calculating sound and vibration values for clearing saws.

Sound pressure level L_{peq} in accordance with ISO 22868

with mowing head	
FS 85 with bike handle:	94 dB(A)
FS 85 R:	94 dB(A)
with metal mowing tool	
FS 85 with bike handle:	94 dB(A)
FS 85 R with barrier bar:	94 dB(A)

Sound power level L_{weq} to ISO 22868

with mowing head	
FS 85 with bike handle:	106 dB(A)
FS 85 R:	106 dB(A)
with metal mowing tool	
FS 85 with bike handle:	106 dB(A)
FS 85 R with barrier bar:	106 dB(A)

Vibration level $a_{hv,eq}$ in accordance with ISO 22867

with mowing head	Handle, left	Handle, right
FS 85 with bike handle:	2.9 m/s^2	3.6 m/s^2
FS 85 R:	4.6 m/s^2	4.6 m/s^2

with metal mowing tool	Handle, left	Handle, right
FS 85 with bike handle:	2.1 m/s^2	3.3 m/s^2

with metal mowing tool	Handle, left	Handle, right
FS 85 R:	4.4 m/s^2	5.6 m/s^2

32.7.2 Tool attachment

The noise and vibration values of the approved tool attachments are listed in the User Manual of each tool attachment.

The K-factor in accordance with Directive 2006/42/EC is 2.0 dB(A) for the sound pressure level and sound power level; the K-factor in accordance with Directive 2006/42/EC is 2.0 m/s^2 for the vibration level.

32.8 REACH

REACH is an EC regulation and stands for the Registration, Evaluation, Authorization and Restriction of Chemical substances.

For information on compliance with the REACH regulation (EC) No. 1907/2006 see

www.stihl.com/reach

32.9 Exhaust Emissions

The CO_2 value measured in the EU type approval procedure is specified at

www.stihl.com/co2

in the product-specific technical data.

The measured CO_2 value was determined on a representative engine in accordance with a standardized test procedure under laboratory conditions and does not represent either an explicit or implied guarantee of the performance of a specific engine.

The applicable exhaust emission requirements are fulfilled by the intended usage and maintenance described in this User Manual. The operating license shall be void if the engine is modified in any way.

33 Maintenance and Repairs

Users of this machine may only carry out the maintenance and service work described in this user manual. All other repairs must be carried out by a servicing dealer.

STIHL recommends that you have servicing and repair work carried out exclusively by an authorized STIHL servicing dealer. STIHL dealers are regularly given the opportunity to attend training courses and are supplied with the necessary technical information.

When repairing the machine, only use replacement parts which have been approved by STIHL for this power tool or are technically identical. Only use high-quality replacement parts in order to avoid the risk of accidents and damage to the machine.

STIHL recommends the use of original STIHL replacement parts.

Original STIHL parts can be identified by the STIHL part number, the STIHL® logo and the STIHL parts symbol (the symbol may appear alone on small parts).

34 Disposal

Contact the local authorities or your STIHL servicing dealer for information on disposal.

Improper disposal can be harmful to health and pollute the environment.

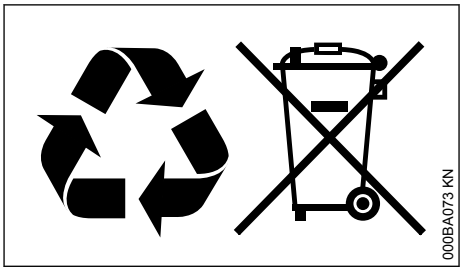

- Take STIHL products including packaging to a suitable collection point for recycling in accordance with local regulations.
- Do not dispose with domestic waste.

35 EC Declaration of Conformity

ANDREAS STIHL AG & Co. KG
Badstr. 115
D-71336 Waiblingen

Germany

declares under its sole responsibility that

Designation:	Brushcutter
Make:	STIHL
Series:	FS 85 FS 85 R
Serial identification number:	4137
Displacement:	25.4 cm^3

conforms to the relevant provisions of Directives 2011/65/EU, 2006/42/EC, 2014/30/EU and 2000/14/EC and has been developed and manufactured in compliance with the following stand-

ards in the versions valid on the date of production:

EN ISO 11806-1, EN 55012, EN 61000-6-1

The measured and the guaranteed sound power level have been determined in accordance with Directive 2000/14/EC, Annex V, and standard ISO 10884.

Measured sound power level

109 dB(A)

Guaranteed sound power level

111 dB(A)

Technical documents deposited at:

ANDREAS STIHL AG & Co. KG
Produktzulassung

The year of manufacture and serial number are indicated on the power tool.

Waiblingen, 2022-08-01

ANDREAS STIHL AG & Co. KG

pp



Robert Olma, Vice President, Regulatory Affairs & Global Governmental Relations

CE



www.stihl.com



0458-393-8321-C