FS 38

STIHL



2 - 25 Instruction Manual

Contents

1 Introduction 2
2 Guide to Using this Manual 2
3 Safety Precautions and Working Techniques 2
4 Approved Combinations of Cutting Attachment, Deflector, Handle and Harness 8
5 Mounting the Loop Handle 9
6 Mounting the Deflector 10
7 Mounting the Cutting Attachment 10
8 Fuel 13
9 Fueling 14
10 Starting / Stopping the Engine 14
11 Operating Instructions 17
12 Cleaning the Air Filter 17
13 Adjusting the Carburetor 18
14 Spark Plug 18
15 Engine Running Behavior 19
16 Storing the Machine 19
17 Maintaining the Mowing Head 19
18 Inspections and Maintenance by Dealer 20
19 Maintenance and Care 21
20 Minimize Wear and Avoid Damage 22
21 Main Parts 22
22 Specifications 23
23 Maintenance and Repairs 23
24 Disposal 24
25 EC Declaration of Conformity 24
26 UKCA Declaration of Conformity 24
27 Addresses 25

1 Introduction

Dear Customer,

Thank you for choosing a quality engineered STIHL product.

It has been built using modern production techniques and comprehensive quality assurance. Every effort has been made to ensure your satisfaction and trouble-free use of the product.

Please contact your dealer or our sales company if you have any queries concerning this product.

Your



Dr. Nikolas Stihl

2 Guide to Using this Manual

2.1 Pictograms

The meanings of the pictograms attached to the machine are explained in this manual.

Depending on the model concerned, the following pictograms may be attached to your machine.



Fuel tank; fuel mixture of gasoline and engine oil



Operate decompression valve



Manual fuel pump



Operate manual fuel pump



Tube of grease



Intake air: Summer operation



Intake air: Winter operation



Handle heating

2.2 Symbols in text

WARNING

Warning where there is a risk of an accident or personal injury or serious damage to property.

NOTICE

Caution where there is a risk of damaging the machine or its individual components.

2.3 Engineering improvements

STIHL's philosophy is to continually improve all of its products. For this reason we may modify the design, engineering and appearance of our products periodically.

Therefore, some changes, modifications and improvements may not be covered in this manual.

3 Safety Precautions and Working Techniques



Some special safety precautions must be observed to reduce the risk of personal injury when operating this

Original Instruction Manual
0000011180_004_GB

Printed on chlorine-free paper
Paper is recyclable.

© ANDREAS STIHL AG & Co. KG 2025
0458-234-0121-F. VA4.H25.

power tool because of the very high speed of its cutting attachment.



It is important you read and understand the User Manual before commissioning and keep it in a safe place for future reference. Non-compliance with the User Manual may cause serious or even fatal injury.

Observe all applicable local safety regulations, e.g. by trade organizations, social insurance institutions, labor safety authorities etc.

If you have never used a power tool before: Have your dealer or other experienced user show you how to operate your machine – or attend a special course to learn how to operate it.

Minors should never be allowed to use the machine – except for apprentices over the age of 16 when working under supervision.

Children, animals and bystanders must not be allowed near the machine.

When not using the machine, it must be laid down in such a way that it does not endanger anyone. Ensure that the machine cannot be used without authorization.

The user is responsible for accidents or risks involving third parties or their property.

Do not lend or rent your power tool without the User Manual. Be sure that anyone using it understands the information contained in this manual.

The use of machines that emit noise may be limited to certain hours of the day as specified by national and/or regional or local regulations.

Anyone operating the machine must be well rested, in good physical health and in good mental condition.

If you have any condition that might be aggravated by strenuous work, check with your doctor before operating a machine.

If you have a pacemaker: The ignition system of your machine produces an electromagnetic field of very low intensity. This field may interfere with some pacemakers. STIHL recommends that persons with pacemakers consult their physician and the pacemaker manufacturer to reduce any health risk.

Anyone who has consumed alcohol or drugs or medicines affecting their ability to react must not operate a power tool.

Depending on the cutting attachment fitted, use your trimmer only for cutting grass, wild growth and similar materials.

The power tool must not be used for any other purpose because of the increased risk of accidents and damage to the machine. Never attempt to modify your power tool in any way since this may result in accidents or damage to the machine.

Only use cutting attachments and accessories that are explicitly approved for this power tool model by STIHL or are technically identical. If you have any questions in this respect, consult your dealer. Use only high quality parts and accessories. in order to avoid the risk of accidents and damage to the machine.

STIHL recommends the use of original STIHL tools and accessories. They are specifically designed to match the product and meet your performance requirements.

Never attempt to modify your power tool in any way since this may increase the risk of personal injury. STIHL excludes all liability for personal injury and damage to property caused while using unauthorized attachments.

Do not use a high-pressure washer to clean the power tool. The solid jet of water may damage parts of the unit.

The guard provided with your machine may not protect the operator from all foreign objects (gravel, glass, wire etc.) ejected by the revolving cutting attachment. Ejected objects may also ricochet and strike the operator.

3.1 Clothing and equipment

Wear proper protective clothing and equipment.



Clothing must be sturdy but allow complete freedom of movement. Wear close-fitting clothes such as a boiler suit, not a loose jacket.



Do not wear clothing which could become trapped in wood, brush or moving parts of the machine. Do not wear a scarf, necktie or jewelry. Tie up and confine long hair above your shoulders.



Wear sturdy shoes with non-slip soles.

WARNING



To reduce the risk of eye injuries, wear close-fitting safety glasses in accordance with European Standard EN 166. Make sure the safety glasses are a snug fit.

Wear face protection and make sure it is a good fit. Face protection alone is not sufficient to protect the eyes.

Wear "personal" sound protection, e.g. ear defenders.



Wear sturdy protective gloves made of a resistant material (e. g. leather).

STIHL can supply a comprehensive range of personal protective equipment.

3.2 Transporting the machine

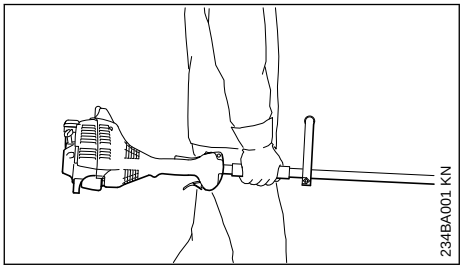

Always stop the engine.

Carry the unit properly balanced by the shaft or loop handle.

By vehicle: When transporting in a vehicle, properly secure your machine to prevent turnover, damage and fuel spillage.

3.3 Refueling



Gasoline is an extremely flammable fuel. Keep clear of naked flames. Do not spill any fuel – do not smoke.

Always shut off the engine before refueling.

Do not fuel a hot engine – **fuel may spill and cause a fire.**

Open the fuel cap carefully to allow any pressure build-up in the tank to release slowly and avoid fuel spillage.

Only refuel the machine in a well ventilated place. If fuel has been spilled, immediately clean the machine – do not allow your clothes to be splashed with fuel. If that happens, change your clothes at once.



After refueling, close the fuel cap as tightly as possible.

This helps reduce the risk of unit vibrations causing an incorrectly tightened fuel cap to loosen or come off and spill quantities of fuel.

Check for leaks. Do not start the engine if there is a fuel leak – **serious or fatal burns could result!**

3.4 Before starting

Check that your power tool is properly assembled and in good condition – refer to appropriate chapters in the User Manual:

- Check the fuel system for leaks, especially the visible parts, e. g., fuel cap, hose connections, manual fuel pump (only in machines with a manual fuel pump). In case of leakage and damage, do not start the engine – **risk of fire!** Have the machine serviced by a dealer before using it
- Use only an approved combination of cutting attachment, deflector, handle and harness. All parts must be assembled properly and securely. To reduce the risk of injury, **never** use metal cutting attachments!
- Slide control / stop switch must move easily to **STOP** or **0**
- Throttle trigger lockout (if installed) and throttle trigger must move easily – the throttle trigger must return to the idle position automatically
- Check that the spark plug boot is secure – a loose boot may cause sparking that could ignite combustible fumes **and cause a fire!**
- Check cutting attachment for correct and secure assembly and good condition
- Check safety devices (e. g., deflector for cutting attachments) for damage and/or wear. Always replace damaged parts. Never operate the unit with a damaged deflector
- Never attempt to modify the controls or safety devices
- Keep the handles dry and clean – free from oil and dirt – this is important for safe control of the machine
- Adjust the harness and handle(s) to suit your height and reach

To reduce the risk of personal injury, do not operate your power tool if it is damaged or not properly assembled!

To prepare for emergencies when using a harness: Practice setting down the machine quickly. To avoid damage, do not throw the machine to the ground when practicing.

3.5 Starting the engine

Start the engine at least 3 meters from the fueling spot, outdoors only.

Place the unit on firm ground in an open area. Make sure you have good balance and secure footing. Hold the unit securely. The cutting attachment must be clear of the ground and all other obstructions because it may begin to run when the engine starts.

Your power tool is a one-person unit. **To reduce the risk of injury** from ejected objects, do not allow other persons within a radius of 15 meters of your own position – even when starting.



Avoid contact with the cutting attachment – **risk of injury!**

Do not drop-start the engine – start it as described in the User Manual.



The cutting attachment runs on for a short while after releasing the throttle trigger – **coasting effect!**

Check engine idling: The cutting attachment must remain at a standstill when the engine idles – throttle trigger released.

To reduce the risk of fire, keep hot exhaust gases and hot muffler away from easily combustible materials (e.g. wood chips, bark, dry grass, fuel).

3.6 Holding and guiding the machine

Always hold the unit firmly with both hands on the handles.

Make sure you always have good balance and secure footing.

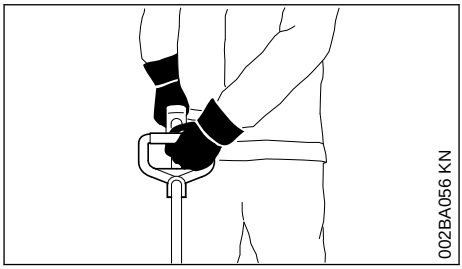

Left hand on the loop handle, right hand on the shaft handle, even if you are left-handed.

3.7 While working

In the event of impending danger or in an emergency, switch off the engine immediately - move the slide control/stop switch to **STOP** or **0**.

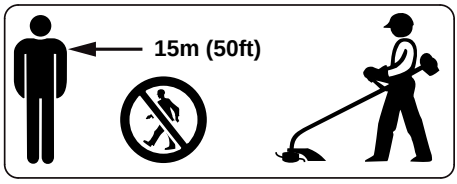

The cutting attachment may catch and eject objects over a great distance and cause injury - therefore, do not allow any other persons within a radius of 15 meters of your own position. This distance must also be maintained in relation to objects (vehicles, window panes) – **risk of property damage!** Even at a distance over 15 m, danger cannot be ruled out.

Check that the engine is properly idling so that the cutting tool will not continue rotating after you release the throttle trigger.

Check and correct the idle speed setting at regular intervals. If the cutting attachment still rotates at idle speed, have your dealer make proper adjustments or repairs.

Take special care in slippery conditions – **damp, snow, ice,** on slopes or uneven ground.

Watch out for obstacles: tree stumps, roots – **risk of tripping or stumbling!**

Make sure you always have good balance and secure footing.

Only work while standing on the ground, never on a ladder or mobile elevated work platform.

Be particularly alert and cautious when wearing hearing protection because your ability to hear warnings (shouts, alarms, etc.) is restricted.

Take breaks when you start getting tired or feeling fatigue – **risk of accidents!**

Work calmly and carefully – in daylight conditions and only when visibility is good. Proceed with caution, do not put others in danger.



As soon as the engine is running, the power machine generates toxic exhaust gas.As soon as the engine is running, the power machine generates toxic exhaust gas. These gases may be odorless and invisible and may contain unburned hydrocarbons and benzene. Never run the engine indoors or in poorly ventilated locations, even if your model is equipped with a catalytic converter.

To reduce the risk of serious or fatal injury from breathing toxic fumes, ensure proper ventilation when working in trenches, hollows or other confined locations. **This reduces the risk of serious or fatal injury from breathing toxic fumes.**

Stop work immediately if you start suffering from nausea, headaches, impaired vision (e.g. your field of vision gets smaller), impaired hearing, dizziness, or impaired concentration – these symptoms may possibly be the result of too-high exhaust gas concentration – **Risk of accidents!**

Operate your power tool so that it produces a minimum of noise and emissions – do not run the engine unnecessarily, accelerate the engine only when working.

To reduce the risk of fire, **do not smoke** while operating or standing near your power tool. Combustible fuel vapor may escape from the fuel system.

Dusts, mist and fumes emissions during the work may be hazardous to your health. Wear respiratory protection in case of heavy dust or smoke emission.

If your power tool is subjected to unusually high loads for which it was not designed (e.g. heavy impact or a fall), always check that it is in good condition before continuing work – see also "Before Starting".

Check in particular that the fuel system has no leaks and the safety equipment is fully operative. Never use a power tool that is no longer safe to operate. In case of doubt, contact a dealer.

Do not operate your power tool in the starting throttle position – engine speed cannot be controlled in this position.



Never work without protection suitable for the respective machine and cutting tool – **risk of injury** by ejected objects!



Check the work site – rocks, metal objects etc. may be caught up and ejected – possibly over a distance of 15 m – **risk of injury!** – They can also damage the cutting attachment and other property (e. g. parking vehicles, windows).

Be particularly careful when working on difficult, densely grown terrain.

When mowing in high shrubbery, under shrubbery and hedges: Hold the cutting tool at a working height of at least 15 cm – avoid risks to animals.

Before you leave the machine: Shut the engine off.

Check the cutting tool regularly at short intervals, and immediately if you feel a change in its behavior:
– Turn off the engine, hold the device securely, press the cutting attachment against the ground to stop it
– Check the condition and firm seat, watch out for fine cracks
– Immediately replace defective cutting tools, also in case of minor hairline cracks

Clean grass and plant residue off the cutting attachment mounting at regular intervals – remove any build up of material from the cutting attachment and deflector.

To **reduce the risk of injury**, shut off the engine before replacing the cutting attachment!

Do not continue using or attempt to repair damaged or cracked cutting attachments by welding, straightening or modifying the shape (out of balance).

Particles or pieces may come off and hit the operator or a bystander at a high speed – **risk of most severe injuries!**

If a rotating cutting attachment touches a rock or another hard object, sparks may be generated which may possibly ignite combustible materials. Also dried-out plants and brushwood are combustible, above all in hot and dry weather. If there is a risk of fire, do not use cutting attachments in the vicinity of combustible materials, dried-out plants or brushwood. It is mandatory that you ask the responsible forestry office about the current fire hazard.

3.7.1 When using mowing heads

Only use the protection with properly mounted blade to ensure that the mowing line is restricted to the permissible length.

Always switch off the engine to adjust the mowing line for manually adjustable mowing heads – **risk of injury!**

Misuse with mowing lines that are too long reduces the working speed of the engine. The constant slipping of the clutch causes overheating and damage to important components (e. g. clutch, plastic housing parts) – e. g. due to the cutting attachment rotating during idling – **risk of injury!**

3.8 Vibrations

Prolonged use of the power tool may result in vibration-induced circulation problems in the hands (whitefinger disease).

No general recommendation can be given for the length of usage because it depends on several factors.

The period of usage is prolonged by:
– Hand protection (wearing warm gloves)
– Work breaks

The period of usage is shortened by:
– Any personal tendency to suffer from poor circulation (symptoms: frequently cold fingers, tingling sensations).
– Low outside temperatures.
– The force with which the handles are held (a tight grip restricts circulation).

Continual and regular users should monitor closely the condition of their hands and fingers. If any of the above symptoms appear (e.g. tingling sensation in fingers), seek medical advice.

3.9 Maintenance and Repairs

Service the machine regularly. Do not attempt any maintenance or repair work not described in the instruction manual. Have all other work performed by a servicing dealer.

STIHL recommends that you have servicing and repair work carried out exclusively by an authorized STIHL servicing dealer. STIHL dealers are regularly given the opportunity to attend training courses and are supplied with the necessary technical information.

Only use high-quality replacement parts in order to avoid the risk of accidents and damage to the machine. If you have any questions in this respect, consult a servicing dealer.

STIHL recommends the use of original STIHL replacement parts. They are specifically designed to match your model and meet your performance requirements.

To reduce the risk of injury, **always shut off the engine** before carrying out any maintenance or repairs or cleaning the machine. – Exception: Carburetor and idle speed adjustments.

Do not turn the engine over on the starter with the spark plug boot or spark plug removed unless the slide control / stop switch is on **STOP** or **0** since there is otherwise a **risk of fire** from uncontained sparking.

To reduce the **risk of fire**, do not service or store your machine near open flames.

Check the fuel filler cap for leaks at regular intervals.

Use only a spark plug of the type approved by STIHL and make sure it is in good condition – see "Specifications".

Inspect the ignition lead (insulation in good condition, secure connection).

Check the condition of the muffler.

To reduce the **risk of fire and damage to hearing**, do not operate your machine if the muffler is damaged or missing. –

Do not touch a hot muffler since **burn injury** will result.

3.10 Cutting Attachments and Deflectors

For safety reasons only the combinations of cutting attachment, deflector, handle and shoulder strap approved in the model-specific instruction manual may be used.

Only mowing heads may be used on trimmers with a curved drive tube and loop handle.

3.10.1 Symbols on Deflectors

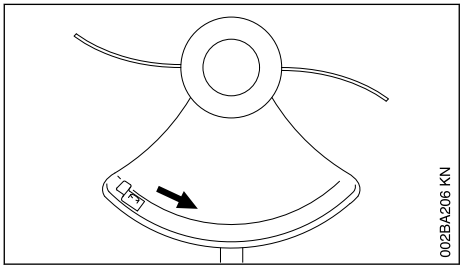

An arrow shows the direction of rotation of the cutting attachments.

3.11 Mowing Head with Nylon Lines

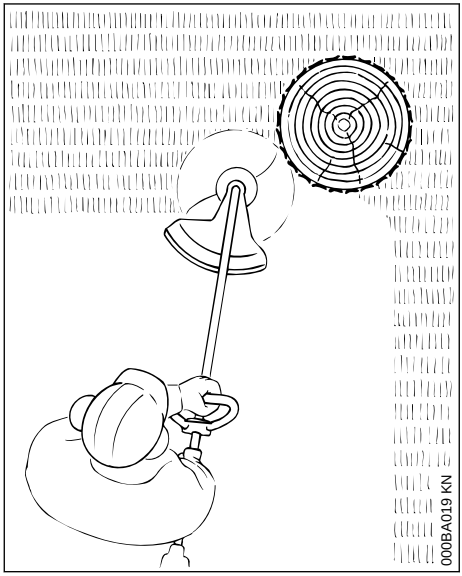

Nylon line achieves a soft cut for edging and trimming around fence posts, trees, etc. – less risk of damaging tree bark.

WARNING

To reduce the **risk of injury, never** use steel wire in place of the nylon cutting line.

3.12 STIHL Polycut Mowing Head with Plastic Blades

For mowing unobstructed edges of meadows (without posts, fences, trees or similar obstacles).

Make sure to pay attention to the safety warnings, maintenance information and wear marks in the User Manual of the mowing head.

WARNING

If the wear limit marks are ignored, there is a risk of the cutting tool shattering and flying parts injuring the operator or bystanders.

To reduce the risk of accidents from shattered blades, avoid contact with stones, metal and similar solid objects.

Check PolyCut blades for cracks at regular intervals. If a crack is found in one of the blades, always replace **all** the blades.

4 Approved Combinations of Cutting Attachment, Deflector, Handle and Harness

Cutting attachment	Deflector	Handle	Carrying strap
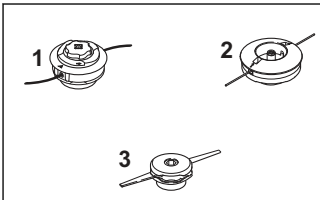	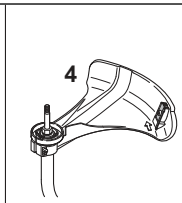		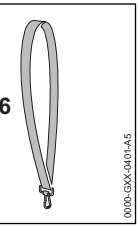

4.1 Permissible combinations

Choose the correct combination from the table depending on the cutting tool!

WARNING

For safety reasons, no other combinations are permitted – **risk of accidents!**

4.2 Cutting attachments

4.2.1 Mowing heads

1 STIHL AutoCut C 6-2

2 STIHL DuroCut 5-2

3 STIHL PolyCut 6-2

4.3 Deflector

4 Guard with blade for mowing heads

4.4 Handle

5 Loop handle

4.5 Carrying strap

6 Shoulder strap can be used

5 Mounting the Loop Handle

The loop handle comes in two different versions.

5.1 Version A

Mounting the loop handle

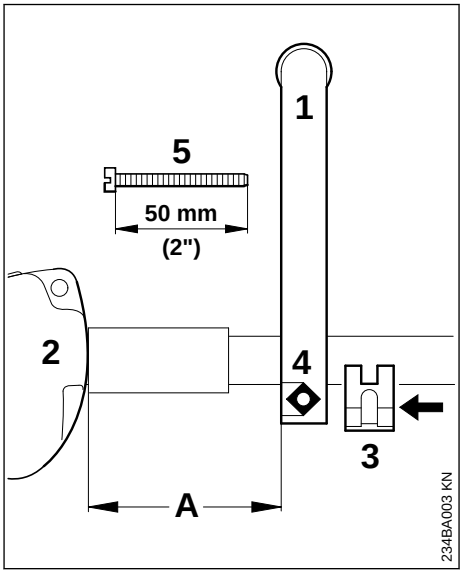

- Fit the loop handle (1) on the drive tube at distance (A) of about 15 cm (6 in.) from the control handle (2).
- Place the clamp (3) against the drive tube and push it into the loop handle.
- Place the square nut (4) in the loop handle,
- insert the screw (5) from the other side and tighten it down firmly.

Adjusting loop handle to most comfortable position

- Loosen the screw (5).
- Move the loop handle along the drive tube as required.
- Tighten down the screw (5) firmly.

5.2 Version B

Your new power tool comes with the loop handle mounted on the drive tube, but it must be turned and lined up to suit your requirements.

Line up the loop handle.

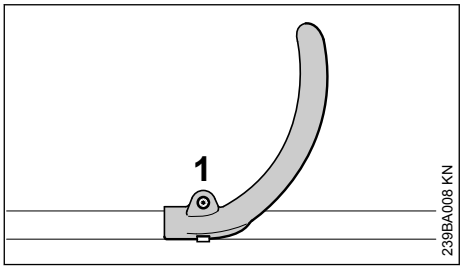

► Loosen the screw (1)

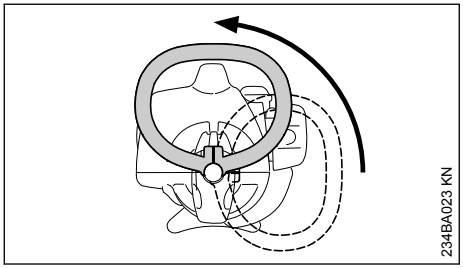

► Turn the handle to the vertical position.

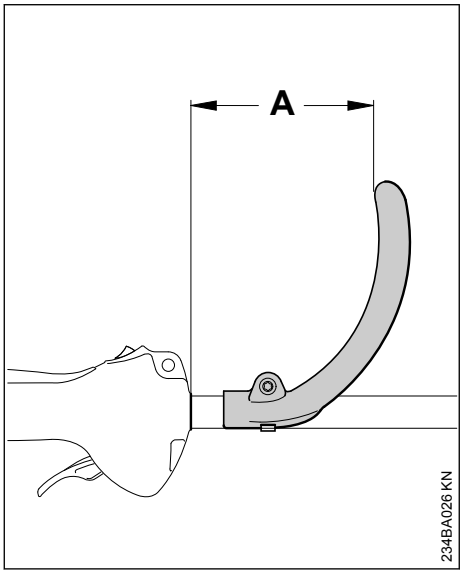

The loop handle can be adjusted to suit the height and reach of the operator and the application by changing distance (A).

Recommendation: distance (A): about 15 cm (6 in)

► Slide the handle to the required position.
► Tighten down the screw so that the handle cannot be rotated on the drive tube

6 Mounting the Deflector

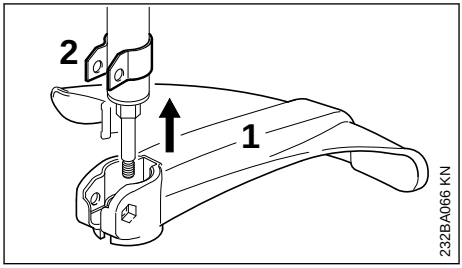

► Push the deflector (1) over the clamp (2) as far as stop.

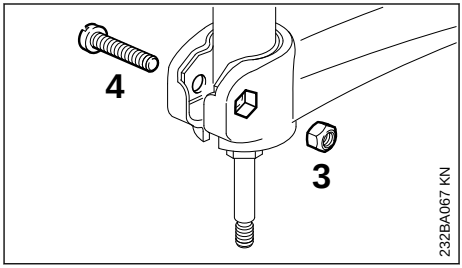

► Insert the nut (3) in the hex recess in the deflector – make sure the holes line up.
► Insert the screw (4) and tighten it down firmly.

7 Mounting the Cutting Attachment

7.1 Placing power tool on the ground

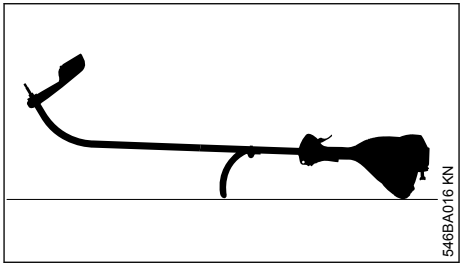

► Switch off the engine.
► Lay your trimmer on its back with the loop handle and shroud pointing down and the output shaft facing up.

7.2 Thrust Plate

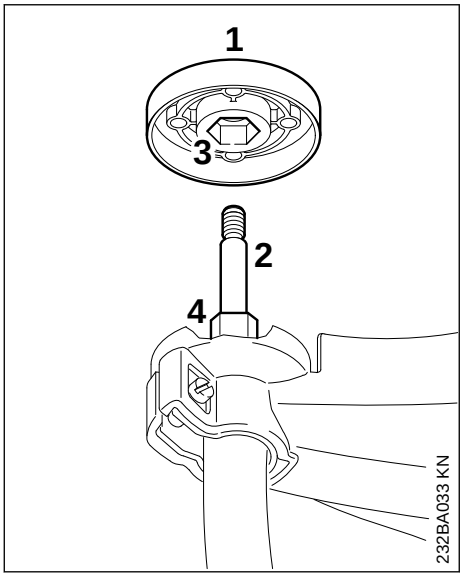

The thrust plate (1) is shipped with the Duro-Cut 5-2 and PolyCut 6-3. It is only required for these mowing heads.

STIHL AutoCut 5-2 mowing head, STIHL Auto-Cut C 5-2 mowing head

- Pull the thrust plate (1), if fitted, off the shaft (2).

STIHL PolyCut 5-2 mowing head, STIHL Fix-Cut 6-3 mowing head

- Slip the thrust plate (1) over the shaft (2) and engage the hex recess (3) on the external hexagon (4).

7.3 Blocking the Shaft

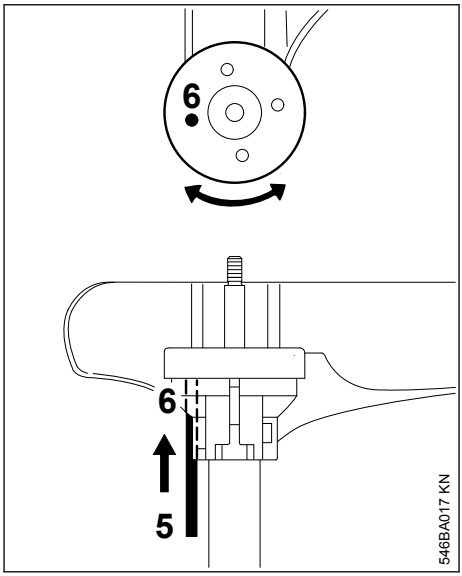

- To block the shaft, insert a suitable tool (5) through the holes (6) in the deflector and thrust plate – turn the thrust plate back and forth if necessary.

7.4 Fitting the mowing head with screw mounting

Keep the supplement sheet for the mowing head in a safe place.

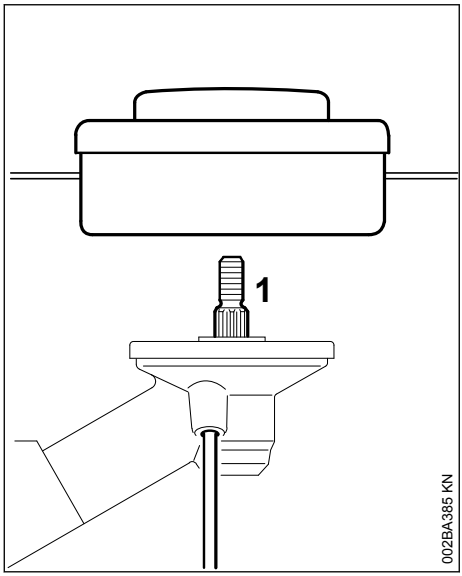

- Fit the thrust plate
- Screw the mowing head counterclockwise on to the shaft (1) as far as it will go
- Retain the shaft
- Tighten the mowing head

NOTICE

Remove the tool that was used to block the shaft.

7.5 Removing the Mowing Head

- Retain the shaft
- Turn the mowing head counterclockwise

7.6 Fitting Mowing Head without Screw Mounting

Keep the supplement sheet for the mowing head in a safe place!

7.6.1 STIHL AutoCut C 6-2

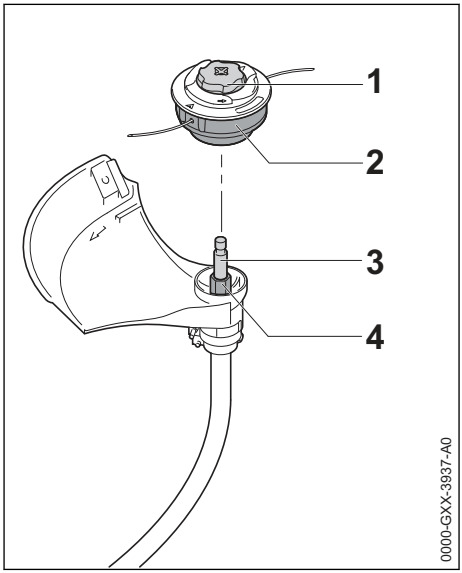

- Place the mowing head (2) on the shaft (3) while inserting the internal hexagon (2) on the hexagon (4)
- Hold the mowing head (2) with your hand.
- Turn cap (1) clockwise and tighten it firmly by hand.

7.6.2 STIHL PolyCut 6-2, PolyCut 7-3

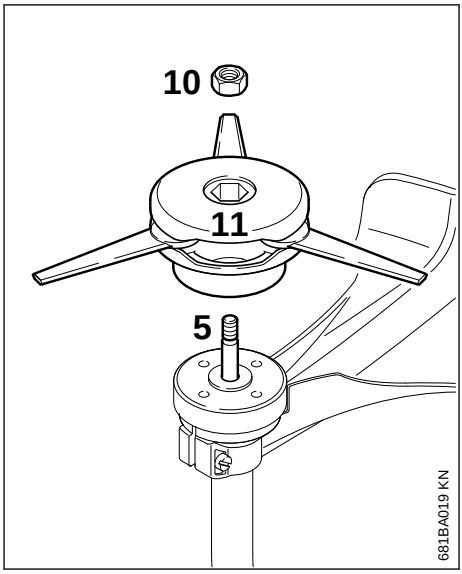

- Push thrust plate onto the shaft

- Insert the nut (10) into the mowing head
- Turn the mowing head (11) clockwise until it engages the shaft (5)
- Retaining the Shaft
- Tighten the mowing head

WARNING

Nuts that move too easily must be replaced.

NOTICE

Remove the tool that was used to block the shaft.

7.7 Removing the Mowing Head

7.7.1 STIHL AutoCut

- Hold the spool housing steady
- Unscrew the cap counterclockwise.

7.7.2 STIHL PolyCut

- Retaining the Shaft
- Turn the mowing head counterclockwise

8 Fuel

The engine requires a mixture of gasoline and engine oil.

WARNING

Avoid direct skin contact with fuel and breathing in of gasoline fumes.

8.1 STIHL MotoMix

STIHL recommends using STIHL MotoMix. This pre-blended fuel is free of benzene and lead, is distinguished by a high octane rating, and always provides the proper mixing ratio.

STIHL MotoMix uses STIHL HP Ultra two-stroke engine oil for optimum engine life.

MotoMix is not available in all markets.

8.2 Mixing fuel

NOTICE

Unsuitable fuels or a mixing ratio that deviates from the specification can lead to severe engine damage. The engine, seals, fuel lines and fuel tank may be damaged if low-quality gasoline or engine oil is used.

8.2.1 Gasoline

Use only **high-quality gasoline** with an octane rating of at least 90 ROC – leaded or unleaded.

Gasoline with an alcohol component exceeding 10% can cause impaired engine performance in engines with manually adjustable carburetors and thus should not be used in these engines.

Engines with M-Tronic deliver full engine performance using gasoline with an alcohol component of up to 27% (E27).

8.2.2 Engine oil

If you mix the fuel yourself, use only STIHL two-stroke engine oil or another high-performance engine oil classified as JASO FB, JASO FC, JASO FD, ISO-L-EGB, ISO-L-EGC or ISO-L-EGD.

STIHL specifies STIHL HP Ultra two-stroke engine oil or an equivalent high-performance engine oil in order to maintain emission limits over the machine's service life.

8.2.3 Mixing ratio

with STIHL two-stroke engine oil 1:50; 1:50 = 1 part oil + 50 parts gasoline

8.2.4 Examples

Quantity of gasoline	STIHL two-stroke engine oil 1:50
Liters	Liters (ml)
1	0.02 (20)
5	0.10 (100)
10	0.20 (200)
15	0.30 (300)
20	0.40 (400)
25	0.50 (500)

- Pour oil into an approved safety fuel canister first, then add gasoline and mix thoroughly

8.3 Storing fuel mixture

Store in approved safety fuel canisters only in a dry, cool and secure place protected against light and sunlight.

Fuel mixture deteriorates with age – mix only as much as needed for a few weeks. Do not store fuel mixture for longer than 30 days. The fuel mixture can become unusable more quickly if exposed to light, sunlight or low or high temperatures.

STIHL MotoMix however can be stored for up to 5 years without any problems.

- Shake the canister containing the fuel mixture thoroughly before refueling

WARNING

Pressure may have built up in the canister – open it carefully.

- The fuel tank and the canister in which fuel mixture is stored should be cleaned thoroughly from time to time

Residual fuel and the liquid used for cleaning must be disposed of in accordance with regulations and without harming the environment!

9 Fueling

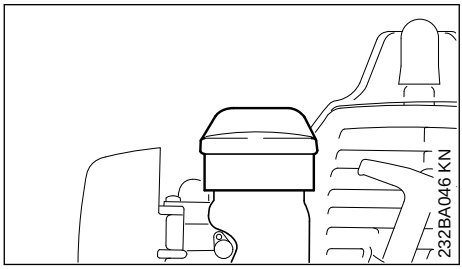

- Before fueling, clean the filler cap and the area around it to ensure that no dirt falls into the tank.
- Position the machine so that the filler cap is facing up.
- Open the filler cap.

Take care not to spill fuel while fueling and do not overfill the tank. STIHL recommends you use the STIHL filler nozzle (special accessory).

WARNING

After fueling, tighten down the filler cap as securely as possible by hand.

10 Starting / Stopping the Engine

10.1 Controls

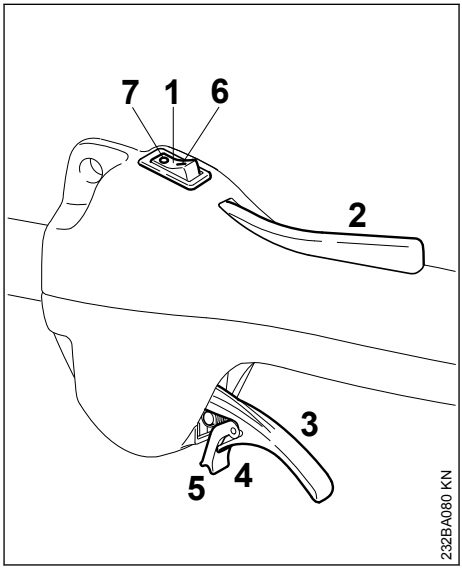

1 Stop switch
2 Throttle trigger lockout
3 Throttle trigger
4 Tongue of throttle trigger
5 Catch

10.1.1 Positions of stop switch

6 I – normal run position – the engine is running or can start
7 0 – Stop – engine off – the ignition is switched off

10.2 Starting

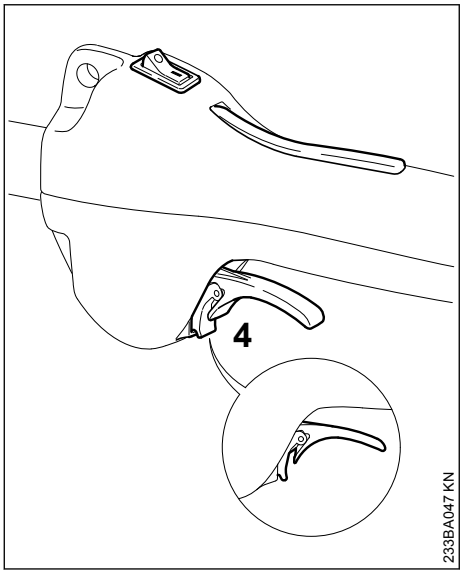

- Move the stop switch to **I**.
- Press down the throttle trigger lockout and hold it there.
- Squeeze the throttle trigger until the catch on the tongue (4) can be engaged on the housing (**arrow**).
- Now release the throttle trigger, tongue and trigger lockout in that order. This is the **starting throttle position**.

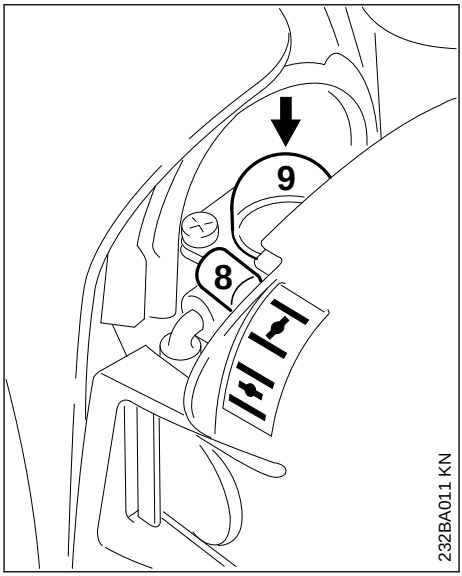

- Set the choke lever (8) to

  if the engine is cold

  for warm start – also use this position if the engine has been running but is still cold.

- Press the manual fuel pump bulb (9) at least five times – even if the bulb is filled with fuel.

10.2.1 Cranking

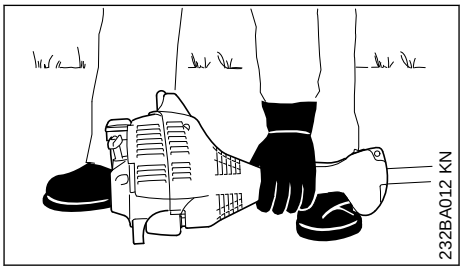

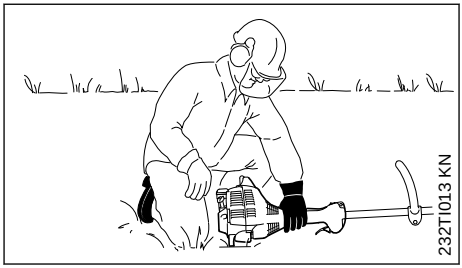

- Place the unit on the ground: It must rest securely on the engine support and the deflector.

To reduce the risk of accidents, check that the cutting attachment is not touching the ground of any other obstacles.

- Make sure you have a firm footing, either standing, stooping or kneeling.
- Hold the unit **firmly** on the ground with your left hand and press down – thumb under the fan housing – do not touch the throttle trigger or trigger lockout.

NOTICE

Do not stand or kneel on the drive tube.

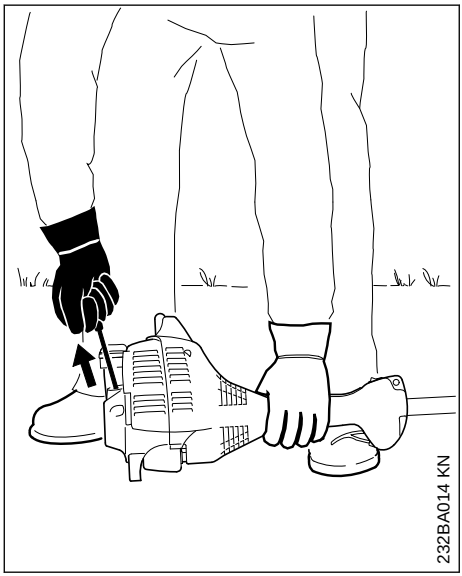

- Hold the starter grip with your right hand.
- Pull the starter grip slowly until you feel it engage and then give it a brisk strong pull.

NOTICE

Do not pull out the starter rope all the way – **it might otherwise break**.

- Do not let the starter grip snap back. Guide it slowly back into the housing so that the starter rope can rewind properly.
- Continue cranking.

10.2.2 When engine begins to fire

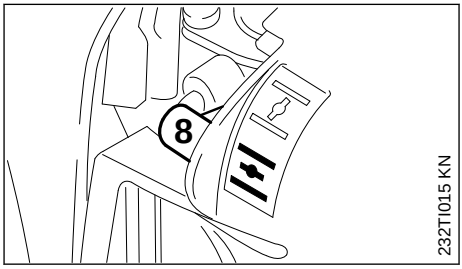

- After no more than **five** pulls, move the choke lever (8) to ⥂ and
- continue cranking.

10.2.3 As soon as the engine runs

- Squeeze the throttle trigger to disengage the tongue – the engine will settle down to idle speed.

WARNING

Make sure the carburetor is correctly adjusted. The cutting attachment must not rotate when the engine is idling.

Your machine is now ready for operation.

10.3 Stopping the Engine

- Move the stop switch to **0**.

10.4 If engine does not start

Choke lever

If you did not move the choke lever quickly enough to ⥂ after the engine began to fire, the engine is flooded.

- Set choke lever to ⥂ and
- move the stop switch to **I**, lockout lever and throttle trigger to the **starting throttle position**.
- Start the engine by pulling the starter rope briskly – 10 to 20 pulls may be necessary.

If the engine still does not start

- Move the stop switch to **0**.
- Remove the spark plug – see "Spark Plug".
- Dry the spark plug.
- Crank the engine several times with the starter to clear the combustion chamber.
- Refit the spark plug – see "Spark Plug".
- Move the stop switch to **I**.
- Set choke lever to ⥂ – even if the engine is cold.
- Now start the engine.

10.4.1 Fuel tank run until completely dry

- After refueling, press the manual fuel pump bulb at least five times – even if the bulb is filled with fuel.
- Set the choke lever to suit the engine temperature.
- Now start the engine.

11 Operating Instructions

11.1 During break-in period

A factory-new machine should not be run at high revs (full throttle off load) for the first three tank fillings. This avoids unnecessary high loads during the break-in period. As all moving parts have to bed in during the break-in period, the frictional resistances in the engine are greater during this period. The engine develops its maximum power after about 5 to 15 tank fillings.

11.2 During Operation

After a long period of full throttle operation, allow the engine to run for a short while at idle speed so that engine heat can be dissipated by the flow of cooling air. This protects engine-mounted components (ignition, carburetor) from thermal overload.

11.3 After Finishing Work

Storing for a short period: Wait for the engine to cool down. Empty the fuel tank and keep the machine in a dry place, well away from sources of ignition, until you need it again. For longer out-of-service periods – see "Storing the Machine".

12 Cleaning the Air Filter

12.1 If there is a noticeable loss of engine power

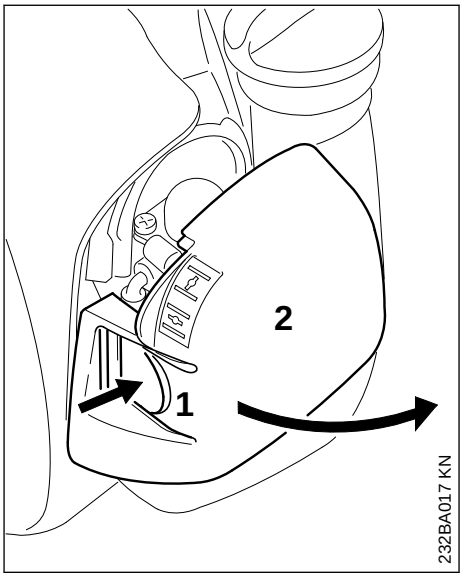

- Set the choke lever to $\overline{I}$.
- Press in the tab (1) and swing the filter cover (2) down.
- Clean away loose dirt from around the filter.

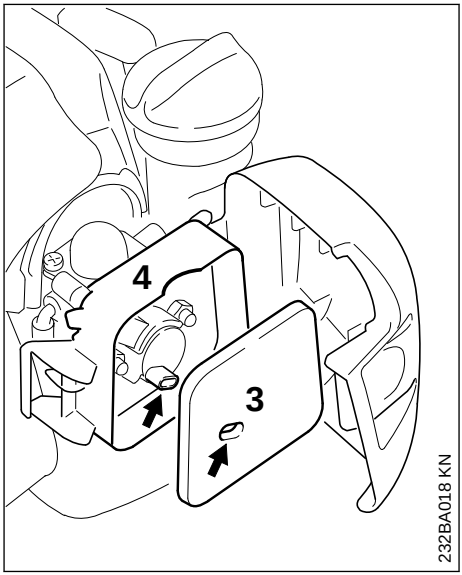

- Remove the felt element (3) from the filter housing (4) and replace it – knock out or blow out as a temporary measure – do not wash.
- Replace damaged parts.
- Fit the felt element (3) in the filter housing (4).
- Close the filter cover so that it snaps into position.

13 Adjusting the Carburetor

The carburetor has been set at the factory to provide an optimum fuel-air mixture under most operating conditions.

13.1 Adjusting Idle Speed

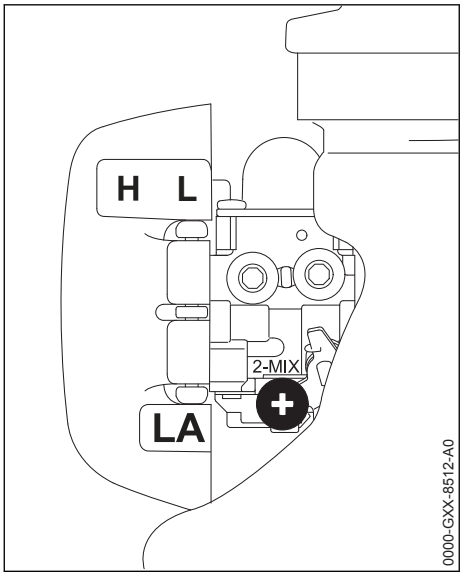

- Start and warm up the engine.

13.1.1 Engine stops while idling

- Turn the idle speed screw (LA) slowly clockwise until the engine runs smoothly – the cutting attachment must not rotate.

13.1.2 Cutting attachment rotates when engine is idling

- Turn the idle speed screw (LA) counterclockwise until the cutting attachment stops moving and then turn the screw another 1/2 to 1 full turn in the same direction.

WARNING

If the cutting attachment continues to rotate when the engine is idling, have your machine checked and repaired by your servicing dealer.

14 Spark Plug

- If the engine is down on power, difficult to start or runs poorly at idle speed, first check the spark plug.
- Fit a new spark plug after about 100 operating hours – or sooner if the electrodes are badly eroded. Install only suppressed spark plugs of the type approved by STIHL – see "Specifications".

14.1 Removing the Spark Plug

- Move the stop switch to **0**.

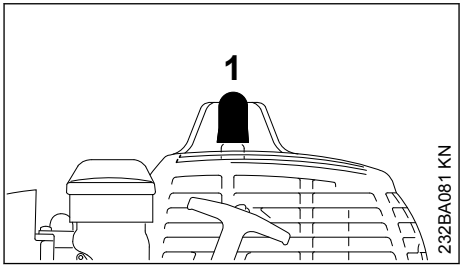

- Pull off the spark plug boot (1).
- Unscrew the spark plug.

14.2 Checking the Spark Plug

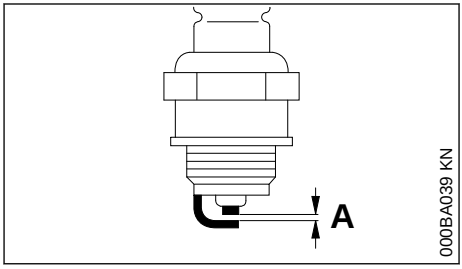

- Clean dirty spark plug.
- Check electrode gap (A) and readjust if necessary – see "Specifications".
- Rectify the problems which have caused fouling of the spark plug.

Possible causes are:
– Too much oil in fuel mix.
– Dirty air filter.
– Unfavorable running conditions.

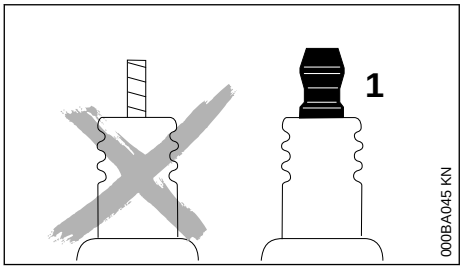

WARNING

Arcing may occur if the adapter nut (1) is loose or missing. Working in an easily combustible or explosive atmosphere may cause a fire or an explosion. This can result result in serious injuries or damage to property.

- Use resistor type spark plugs with a properly tightened adapter nut.

14.3 Installing the spark plug

- Screw home the spark plug, fit the boot and press it down firmly.

15 Engine Running Behavior

If engine running behavior is unsatisfactory even though the air filter is clean and the carburetor is properly adjusted, the cause may be the muffler.

Have the muffler checked for contamination (carbonization) by your servicing dealer.

STIHL recommends that you have servicing and repair work carried out exclusively by an authorized STIHL servicing dealer.

16 Storing the Machine

For periods of 30 days or longer

- Drain and clean the fuel tank in a well ventilated area.
- Dispose of fuel properly in accordance with local environmental requirements.
- If a manual fuel pump is fitted: Press the manual fuel pump at least 5 times.
- Start the engine and run it at idling speed until it stops.
- Remove, clean and inspect the cutting attachment.
- Thoroughly clean the machine – pay special attention to the air filter.
- Store the machine in a dry and secure location – out of the reach of children and other unauthorized persons.

17 Maintaining the Mowing Head

17.1 Placing power tool on the ground

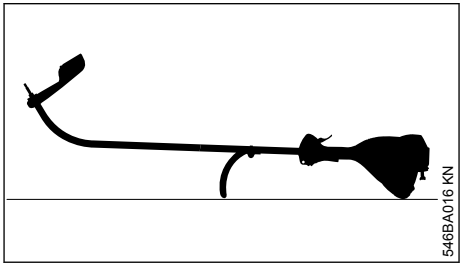

- Switch off the engine.
- Lay your trimmer on its back with the loop handle and shroud pointing down and the output shaft facing up.

17.2 Replacing Nylon Line

Always check the mowing head for signs of wear before replacing the nylon line.

WARNING

If there are signs of serious wear, replace the complete mowing head.

The nylon mowing line is referred to as "nylon line" or "line" in the following.

The mowing head is supplied with illustrated instructions for replacing the nylon line. Keep the instructions for the mowing head in a safe place.

- If necessary, remove the mowing head.

17.3 Adjusting Nylon Line

17.3.1 STIHL AutoCut

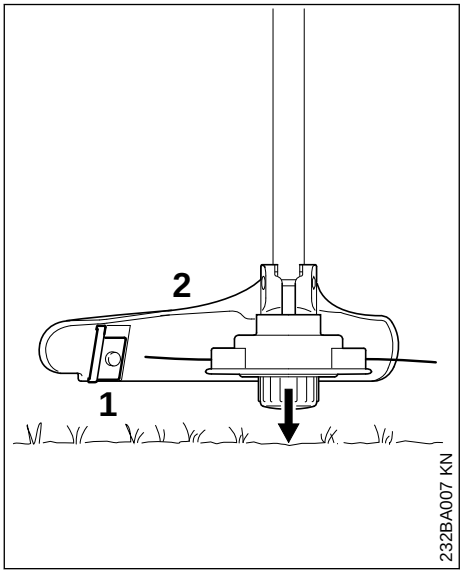

- Hold the rotating mowing head above the ground – tap it on the ground once – about 3 cm (1.2 in) of fresh line is advanced.
- The blade (1) on the deflector (2) trims surplus line to the correct length – avoid tapping the mowing head more than once at a time.

Line feed operates only if **both** lines still have a minimum length of **2.5 cm (1 in)**.

If the line is shorter than 2.5 cm (1 in):

WARNING

To reduce the risk of injury, always shut off the engine before adjusting the nylon mowing line by hand.

- Turn the machine over.
- Press down the cap on the spool as far as stop.
- Pull the ends of the lines out of the spool.

If the spool is empty, refill with nylon line.

17.3.2 All other mowing heads

Refer to the leaflet supplied with the mowing head.

WARNING

To reduce the risk of injury, always shut off the engine before adjusting the nylon mowing line by hand.

17.4 Replacing Nylon Line

STIHL DuroCut

WARNING

To reduce the risk of injury, always shut off the engine before refilling the mowing head.

- Fit nylon line in the mowing head as described in the instructions supplied.

17.5 Replacing Cutting Blades

17.5.1 STIHL PolyCut

Always check the mowing head for signs of wear before installing new cutting blades.

WARNING

If there are signs of serious wear, replace the complete mowing head.

The thermoplastic cutting blades are referred to as "blades" in the following.

The mowing head is supplied with illustrated instructions for replacing the blades. Keep the instructions for the mowing head in a safe place.

WARNING

To reduce the risk of injury, always shut off the engine before installing the blades.

- Remove the mowing head.
- Replace blades as shown in the illustrated instructions.
- Mount the mowing head on the machine.

18 Inspections and Maintenance by Dealer

18.1 Fuel pickup body in tank

- Have the pickup body in the fuel tank replaced every year.

STIHL recommends that you have servicing and repair work carried out exclusively by an authorized STIHL servicing dealer.

19 Maintenance and Care

The following intervals apply to normal operating conditions only. If your daily working time is longer or operating conditions are difficult (very dusty work area, etc.), shorten the specified intervals accordingly.		before starting work	after finishing work or daily	after each refueling stop	weekly	monthly	every 12 months	if problem	if damaged	as required
Complete machine	Visual inspection (condition, leaks)	X		X						
	Clean		X							
	Replace any damaged parts	X								
Control handle	Check operation	X		X						
Air filter	Visual inspection						X	X		
	Clean							X		X
	Replace								X	
Manual fuel pump (if fitted)	Check	X								
	Have repaired by servicing dealer[1)]								X	
Pickup body (filter) in fuel tank	Have checked by servicing dealer[1)]							X		
	Have replaced by servicing dealer[1)]						X		X	X
Fuel tank	Clean							X		X
Carburetor	Check idle adjustment – the cutting attachment must not rotate	X		X						
	Adjust idle speed									X
Spark plug	Adjust electrode gap							X		
	Replace after every 100 operating hours									
Cooling air inlet	Visual inspection		X							
	Clean									X
All accessible screws and nuts (not adjusting screws)	Retighten									X
Cutting attachment	Visual inspection	X		X						
	Replace								X	
	Check tightness	X		X						
Safety labels	Replace								X	

[1)]STIHL recommends an authorized STIHL servicing dealer.

20 Minimize Wear and Avoid Damage

Observing the instructions in this manual helps reduce the risk of unnecessary wear and damage to the power tool.

The power tool must be operated, maintained and stored with the due care and attention described in this owner's manual.

The user is responsible for all damage caused by non-observance of the safety precautions, operating and maintenance instructions in this manual. This includes in particular:
– Alterations or modifications to the product not approved by STIHL.
– Using tools or accessories which are neither approved or suitable for the product or are of a poor quality.
– Using the product for purposes for which it was not designed.
– Using the product for sports or competitive events.
– Consequential damage caused by continuing to use the product with defective components.

20.1 Maintenance Work

All the operations described in the "Maintenance Chart" must be performed on a regular basis. If these maintenance operations cannot be performed by the owner, they should be performed by a servicing dealer.

STIHL recommends that you have servicing and repair work carried out exclusively by an authorized STIHL servicing dealer. STIHL dealers are regularly given the opportunity to attend training courses and are supplied with the necessary technical information.

If these maintenance operations are not carried out as specified, the user assumes responsibility for any damage that may occur. Among other parts, this includes:
– Damage to the engine due to neglect or deficient maintenance (e.g. air and fuel filters), incorrect carburetor adjustment or inadequate cleaning of cooling air inlets (intake ports, cylinder fins).
– Corrosion and other consequential damage resulting from improper storage.
– Damage to the machine resulting from the use of poor quality replacement parts.

20.2 Parts Subject to Wear and Tear

Some parts of the power tool are subject to normal wear and tear even during regular operation in accordance with instructions and, depending on the type and duration of use, have to be replaced in good time. Among other parts, this includes:
– Cutting attachments (all types)
– Mounting hardware for cutting attachments (rider plate, nut, etc.)
– Deflectors for cutting attachments
– Clutch
– Filters (air, fuel)
– Rewind starter
– Spark plug

21 Main Parts

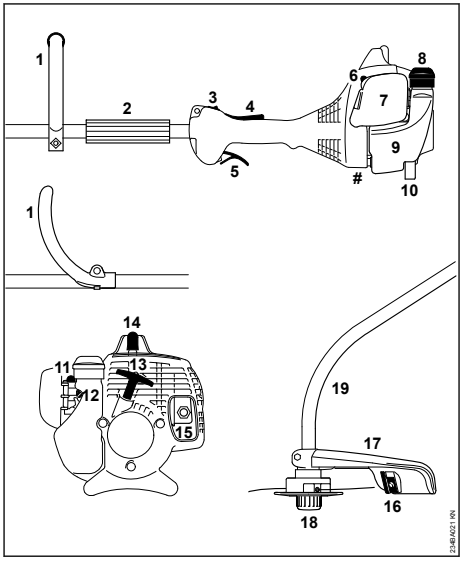

1 Loop Handle
2 Sleeve
3 Stop Switch
4 Throttle Trigger Lockout
5 Throttle Trigger
6 Choke Lever
7 Air Filter Cover
8 Tank Cap
9 Tank
10 Machine Support
11 Manual Fuel Pump

12 Idle Speed Screw (LA)

13 Starter Grip

14 Spark Plug Boot

15 Muffler

16 Line limiting blade

17 Deflector

18 Mowing Head

19 Shaft

 # Serial Number

22 Specifications

22.1 Engine

Single-cylinder two-stroke engine

22.1.1 FS 38

Displacement:	27.2cm^3
Cylinder bore:	34 mm
Piston stroke:	30 mm
Engine power:	0.65 kW (0.90 hp) at 8300 rpm
Idle speed:	2800 rpm
Cut-off speed (nominal value):	10000 rpm
Max. output shaft speed (cutting tool holder):	10600 rpm

22.2 Ignition system

Electronic magneto ignition

Spark plug (suppressed):	NGK BPMR 7 A
Electrode gap:	0.5 mm

22.3 Fuel system

All-position diaphragm carburetor with integral fuel pump

Fuel tank capacity:	330 cm^3 (0.33 l)

22.4 Weight

Dry, without cutting attachment and deflector

FS 38:	4.1 kg

22.5 Noise and vibration values

The idle and nominal maximum speed operating states are given equal consideration when calculating sound and vibration levels.

For details on compliance with the Vibration Directive 2002/44/EC, visit

www.stihl.com/vib

Sound pressure level L_{peq} in accordance with ISO 22868

97 dB(A)

Sound power level L_{weq} in accordance with ISO□22868

106 dB(A)

Vibration level $a_{hv,eq}$ in accordance with ISO 22867

Handle, left	Handle, right
9.5 m/s^2	8.0 m/s^2

The K-factor in accordance with Directive 2006/42/EC is 2.0 dB(A) for the sound pressure level and sound power level; the K-factor in accordance with Directive 2006/42/EC is 2.0 m/s^2 for the vibration level.

22.6 REACH

REACH is an EC regulation and stands for the Registration, Evaluation, Authorization and Restriction of Chemical substances.

For information on compliance with the REACH regulation (EC) No. 1907/2006 see

www.stihl.com/reach

22.7 Exhaust Emissions

The CO_2 value measured in the EU type approval procedure is specified at

www.stihl.com/co2

in the product-specific technical data.

The measured CO_2 value was determined on a representative engine in accordance with a standardized test procedure under laboratory conditions and does not represent either an explicit or implied guarantee of the performance of a specific engine.

The applicable exhaust emission requirements are fulfilled by the intended usage and maintenance described in this User Manual. The operating license shall be void if the engine is modified in any way.

23 Maintenance and Repairs

Users of this machine may only carry out the maintenance and service work described in this user manual. All other repairs must be carried out by a servicing dealer.

STIHL recommends that you have servicing and repair work carried out exclusively by an authorized STIHL servicing dealer. STIHL dealers are regularly given the opportunity to attend training courses and are supplied with the necessary technical information.

When repairing the machine, only use replacement parts which have been approved by STIHL for this power tool or are technically identical. Only use high-quality replacement parts in order to avoid the risk of accidents and damage to the machine.

STIHL recommends the use of original STIHL replacement parts.

Original STIHL parts can be identified by the STIHL part number, the STIHL® logo and the STIHL parts symbol GI® (the symbol may appear alone on small parts).

24 Disposal

Contact the local authorities or your STIHL servicing dealer for information on disposal.

Improper disposal can be harmful to health and pollute the environment.

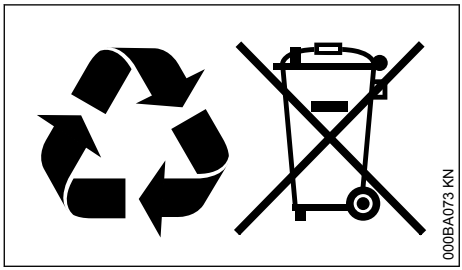

- Take STIHL products including packaging to a suitable collection point for recycling in accordance with local regulations.
- Do not dispose with domestic waste.

25 EC Declaration of Conformity

ANDREAS STIHL AG & Co. KG
Badstr. 115
D-71336 Waiblingen

Germany

declares under its sole responsibility that

Designation:	Brushcutter
Make:	STIHL
Series:	FS 38
Serial identification number:	4140
Displacement:	27.2cm^3

conforms to the relevant provisions of Directives 2011/65/EU, 2006/42/EC, 2014/30/EU and 2000/14/EC and has been developed and manufactured in compliance with the following standards in the versions valid on the date of production:

EN ISO 11806-1, EN 55012, EN 61000-6-1

The measured and the guaranteed sound power level have been determined in accordance with Directive 2000/14/EC, Annex V, and standard ISO 10884.

Measured sound power level

FS 38: 109 dB(A)

Guaranteed sound power level

FS 38: 111 dB(A)

Technical documents deposited at:

ANDREAS STIHL AG & Co. KG
Produktzulassung

The year of manufacture and serial number are applied to the product.

Waiblingen, 2022-08-01

ANDREAS STIHL AG & Co. KG

pp

Robert Olma, Vice President, Regulatory Affairs & Global Governmental Relations

CE

26 UKCA Declaration of Conformity

ANDREAS STIHL AG & Co. KG
Badstr. 115
D-71336 Waiblingen

Germany

declares under its sole responsibility that

Designation:	Brushcutter
Make:	STIHL
Series:	FS 38
Serial identification number:	4140
Displacement:	27.2cm^3

conforms to the relevant provisions of UK regulations The Restriction of the Use of Certain Hazardous Substances in Electrical and Electronic Equipment Regulations 2012, Supply of Machinery (Safety) Regulations 2008, Electromagnetic Compatibility Regulations 2016 and Noise Emission in the Environment by Equipment for use Outdoors Regulations 2001 and has been manufactured in compliance with the following standards in the versions valid on the date of production:

EN ISO 11806-1, EN 55012, EN 61000-6-1

The measured and guaranteed sound power levels were determined in accordance with the UK Noise Emission in the Environment by Equipment for Use Outdoors Regulations 2001, Schedule 8, using the ISO 10884 standard.

Measured sound power level

FS 38: 109 dB(A)

Guaranteed sound power level

FS 38: 111 dB(A)

Technical documents deposited at:

ANDREAS STIHL AG & Co. KG

The year of manufacture and serial number are applied to the product.

Waiblingen, 2022-08-01

ANDREAS STIHL AG & Co. KG

pp



Robert Olma, Vice President, Regulatory Affairs & Global Governmental Relations

UK CA

27 Addresses

www.stihl.com



www.stihl.com



0458-234-0121-F