J M D H < H > K L H E V A H < : L ? E Y I H H ; K E M @ B < : G B X B W D K I E M L : P B B

B A F ? E V Q B L ? I G V ? C [j _ g ^ = L P $ Q L f h ^ _ e **SG350E PRO**

< G B F : G B ? g _ i j _ \ u r Z c h m] h g e Z d e h b g a Z _ e v q b [l h _ e y _ i j b w d k i e m Z ^ Z e p y b _ b ^ h l \ j Z s _ g b y i h y \ e _ g b y g _ b k i j Z \ g h k l b ^ \ b] Z l _ e y

H;J:S?GB?DIHDMI:L?EX

;eZ]h^Zjbkaihdmibmf_evqbl_ey ig_c b^_Zevgh ih^oh^bl dZd ^ey ijhn_kkbhgZeh\ l
m^Ze_gb_ dhjg_c b ig_c Kjm[^_j_\Z fh‘_l [ulv oehihlguf ^_ehf
aZl_m^Zeblvjgbi_gWlhjm^h_fbZjy[mxsZhyevrbmkbejZ[hlZhlhjZgbdh]^Z
g_ [u\Z_l ijhklhc beb m\e_dZl_evghc <hkihevamcl_kv gZr_c baf_

Baf_evqbl_ev ig_c b^_Zevgh ih^oh^bl dZd ^ey ijhn_kkbhgZeh\ l
ex[bl_e_c‘msbc ^bkd k j_apZfb bf_xsbfb \hevnjZfh\h_ ihdju
agZqbl_evgh h[e_]qZ_l jZ[hlm ijb m^Ze_gbb dhjg_c b ig_c k f
fhsgubaf_evqbilg_ebkgZsmjh[guifbjmqgy^feyjZgkihjlbjhb\idj_f_s_gby
ihfhsvx ^gZuo ihjmqg_c \ djZlqZcrb_ kjhdb \u kfh‘_l_ ijbklmiblv
m^Ze_gbx wlbo g_ijbylguo ig_c b dhjg_c

>Zggubaf_evqbhkgZsmkljhckl\[ZfahiZkghlhjukj]^Zhe‘g[uulv\ohjhr_f
jZ[hqkfhklhyblgZoh^bgvZkyhbo f_klZjofwwdkiemZlZpbbdhmdhyhlZZgh\Z
^\b]Zl_ey b njhglZevguc j_‘msbc ^bkd h[_ki_qb\Zxl fZdkbfZevg
jZ[hlu<h\j_fyjZ[hlug_h[oh^bkfh]^mZ^_j‘b\ZjhwdhylhlmZgh^\Zo]Zl_eykeb_
hkeZ[blv ^\b]Zl_ev Z\lhfkZllZgh\kdlky

<gbfZl_evgh ijhqlbl_ ^Zggh_ jmdh\h^kl\h ihevah\Zl_ey i_j_^ g
h[_ahiZkblv k_[y b ^jm]bo iheghklvx hkhagZ\ \k_ mdZaZgb
ij_^mij_‘^_gby b ij_^hkl_j_‘_gby ih l_ogbd_ [_ahiZkghklb Jm
wdkiemZlZpbb kjZ^bjbZbgkljmdhlb_bogb[d_ahiZkghklb bgmhjmZkdhxckl\m
hkgh\gu_ l_ogbq_kdb_ oZjZdl_jbklbdb hibkZgb_ jZ[hq_]h ijhp_k
l_ogbq_kdhkfemm‘b\ZgjbZxgkihjlbjhb\odj_Zg_gbmxkljZg_gbkeZ^hdhlhjufh]ml
[ulv bkihevah\Zgu ihevah\Zl_e_f \h \j_fy wdkiemZlZpbb baf_evqb

IJBF?Q:GB?Baf_evqbligevoij_^gZagZ^qeygkihevah\ZdgZeybnbpbjh\Zggu
hi_jZlhjhf G_ ke_^m_l ^himkdZlv ^h _]h wdkiemZlZpbb g_h
khijh\h‘^_gby hiulgh]h hi_jZlhjZ Hldjuluc j_‘msbc ^bkd wlh]h
kha^Z_l hiZkgmx ahgm g_ihkj_^kl_ggh i_j_^ gbf \h \j_fy jZ[hlu
kh[ex^Zlv hkh[mx hklhjh‘ghklv G_ ih^_j]Zcl_ baf_evqbl_ev ig_
bkhevamcl_ ijb iehohf hk_s_gbb b \k_]^Z gZ^_\Zcl_ kj_^kl\Z bg

IJ:<BE:L?OGBD;B AHI:KGHKLB

1. HKGH<GU?:<BE:L?OGBD;B AHI:KGHKLB

1.1 Hi_jZlhgj_khl_lkl_ggbhk[lwaZgbfZl_ekvgh^balZ_fqlh[baf_evqbilg_ev wdkiemZlbjh_ZlekZykghhbhl_lkl\bbgkkjmdpbiybb_^_gguf^lZgjhmdh\h^kl_ ihevah\Zl_ey OjZgbl_ jmdh\h^kl\h ihevfahk\Zl_beyi_j_g^Z\Zcghf_]h ihevah\Zl_eyf _keb baf_evqbl_ev ig_c\[mf^_glghj_^ihkelZabe\bZgbbZg ^jm]hfm ihevah\Zl_ex

1.2 <gbfZl_evgh bamqbl_ b kh[ex^Zcl_ \k_ ijb_^_ggu_ gb‘_ ijZ\ [_ahiZkghklb

1.3 AZij_s_gbklZheylv baf_evqbl_ev ig_c [_a ijbkfhljZ ijb _]h ij_^hl\jZs_gby ^himkdZ ^h mijZ\e_gby g_ih^]hlh\e_ggh]h beb g_r

1.4 Hi_jZlhj ^he‘_g ijhy\eylv ^he‘gmx hklhjh‘ghklv b hkfhljbl_ [_ahiZkghklb hdjm‘ZxsboyowdkiemZlZpbb baf_evqbl_ey ig_c

1.5 <^Zggjhmdh\h^khlevah\Zfh_emlulvokihevahgZ_dlhjue_bk_bake_^mxsbo ij_^mij_‘^Zxsbo agZdh\ kbf\heh\ b beb ihdE@]GZfke_^hu\Zlv ij_^mij_‘^_gbyf mdZaZggufgZ gbo G_[khZegxb^y_fb‘__wlhjh_klb d l ^ey \Zk kZfbo beb hdjm‘Zxsbo \Zk ex^_c

HI:KGH

H[hagZqhZ_lkgmxkblmZpbxdhlhjZy‘_lijb_klbdihemq_gkbxjv_agjZg_gbeb e_lZevgh]h bkoh^Z \ kemqZ_ g_kh[ex^_gby ijZ\be l_ogbdb [_ahiZ

<GBF:GB?

H[hagZqZ_l hiZkgmx kblmZpbx dhlhjZy fh‘_l ijb_klb d ihemq_gk g_kh[ex^_gby ijZ\be l_ogbdb [_ahiZkghklb

IJ?>MIJ?@>?GB?

H[hagZqZ_l hiZkgmx kblmZpbx dhlhjZy fh‘_l ijb_klb d ihemq_gk kl_i_gb ly‘_kkebmqZ_ g_kh[ex^_gby ijZ\be l_ogbdb [_ahiZkghklb

I:FYLD:

H[hagZdkZl_mZpdbhklhjZhy‘_lijb_klbdih\j_‘^_gb_xogbdb

Hi_jZlhj ^he‘_g iheghklvx hkhagZlv ijZ\beZ l_ogbdb [_ahiZkghkll wdkiemZlZpbb baf_evqbl_ey ig_c

Khhl_lkl\mkxsb^_klbZ^b\b^mZaeZgbhlhe‘g[uulv\k_]^gZZ^_ljubwdkiemZlZpb beb ijh_^_gbb j_fhglZ baf_evqbl_ey ig_c

2. <UOEHIGU=?:AU

2.1 M]ZjguZawlhZa_p_lbZaZiZe<ZuoZgwbl_h]]hZafZ‘_lijb_klbkfd_jlbZlZd‘_ d k_jv_agbeh^kjhqguf ijh[e_fZf kh a^hjh\v_f lZdbf dZd ih\j_‘^_gb

2.2 Kbfilhfuhljz\e_gby m]ZjguflZakbfilhdZ‘fb]jbiiZ ibs_\h]h hljZ\bjmkguo bgn_dpbc b ijhklh mklZehklb Ex^b qZklh hrb[hqgh ij hljZ\e_gb_-ahZ^qhm]h_

2.3 Kbfilhfu hljZ\e_gby m]ZjguflZakbfilhdZ‘fb]jbiiZ ibs_\h]h hljZ \bjmkguo bgn_dpbc b ijhklh mklZehklb Ex^b qZklh hrb[hqgh ij hljZ\e_gb_-ahZ^qhm]h_

2.4 <hba[_‘Zghbj_Z\e_gmbjZjguZahGf?bkihevahm[chj_m^h\ZZ[hlZxsgZ_gabg_ beb^ba_gehvflhieb_ke_^mxsbofb_s_gby\bfZ]ZjZ‘_iZeZldZ_\lhnmj]h^gf_gZ

dhe_kbZedbeh^dWlhg_bkq_jiu\Zxsibjc_q_gbv_kebm\Zk_klvdZd-be_b[hkhfg_gby
h[jZlbl_kv d k\h_fm ^be_jm
2.5 ?keb \u kqblZ_l_ ql-hh\ub\aZe_b]hdlhmdjm‘_gby ihkljZ^Ze hl hljZ\e_g
]Zahf
G_f_^e_gug\h_^blb_ogZk_‘bcha^mibndbgmh\f_s_gbb_ebhldju\^_jbb hdgZ
ljh_jvl_ qlh ^\b]Zl_ev h[hjm^h\Zgby \udexq_g
G?\oh^bl_ihf_s_gb]^_dZduih^haj_\Zijb_kmlkl\m]Zjgu]Za \f_klhwlh]h
iha\hgbl_ \ kem‘[m wdklj_gghc ihfhsb
G_f_^e_hg[gZlbl_dkvZqbmeb[hevgbkpmh[sbb_fhih^haj_gbZbljZ\e_gmb]_jguf
]Zahf
A:lJ?S?GH ijhba\h^blv wdkiemZlZpbx baf_evqbl_ey ig_c beb \de
ihf_s_gbb beb \ ^\b‘ms_fky ljZgkihjlghf kj_^kl_

3. lJ:<BE:L?OGBD;B AHl:KGHKUBBH;J:S?GBBK;?GABGHF

3.1. ;m^vl_ hklhjihjbgbu[jZs_gb_bgabghf ;_gabgkee_Zdhgy_lkyZjZ_hjh_gv
\aju\hhiZkgu
3.2. Gbdh]^Z g_ kgbfZcl_ djurdm lhieb\hgehb]hZq[_dZlhbebg\h ijb jZ[hl
^\b]Zl_e_ l_j_^ aZijZ\dhc aZ]emrbl_ ^\b]Zl_ev b ^Zcl_ hklulv
\uoehighc kbkl_fu
3.3. G_dmjb\h\j_fyaZijZ\dhbieb\hf
3.4. l_j_^gZqZevhdkiemZlaZZbeb_bc\ldZjl_^j\b]Zl_ehyevdgh_kbgl_lbqfhkldjhg_h_
fZkeh -30Z10w-40/15w-30/15w- qlh[u ij_^hl\jZlblv ih\j_‘^_gb_ ^\b]Zl_ey
3.5. Gbdh]g^aZijZ\eybogl_ojZgbbl_af_evqbilg_ev\f_klZkbklhqgbdhZfbjulhj]hgy
bkdj beb ^jm]bfb bklhqgbdZfb \hkieZf_g_gby
3.6. G_ iulZcl_kv \dexqblv_^\ebb]Zlu_ehvjZaeblh lhieb\h l_j_^ \dexq_g
\uljbl_ ijhebl h_ lhieb\h b m[_^bl_kv qlh hgh iheghklvx \ukhoeh
3.7. <k_]^jZh_jycbq_lh[udjurdZhieb\ghj]Zhd]Zuez]Z^_‘aZlygmlZ
3.8. ?kebp_h[oh^bebdlvhieb\bdahieb\ghj]Zhdvlke_^m_eZgvZhldjulh\ha^mo_

4. MJH<?GRVMF:

4.1. Rmfijbj Z[hlb_af_evqbilg_ebv\h‘_lijb_klbbih\j_‘^_gbvk]Zghkemo>Zeya Zsblu
hj]Zgh\ kemoZ bkihevamcl_ kj_^kl\Z aZsblu hj]Zgh\ kemoZ lZ
gZmrgbJb_bdhf_g^mj_]lhkeyijgh_jykvemmohklhygglbevah\Zl;e^vch\kh[_ggh
[^bl_evbghuklhjh‘gbukihevkajm^klaZsblmr_chkdhewdlhmgba\bZrmkihkh[ghklv
keurZlv ij_^mij_‘^Zxsb_ kb]gZeu
4.2. Rmf kha^Z\Z_fuc ^Zgguf baf_evqbl_e_f g_ba[_‘jZg[hl<uui\he
mklZgh\e_ggh_ \j_fy b \ l_q_gb_ hij_^_e_ggh]h i_jbh^Z \j_f_gb
fbgbfmfZ >ey \Zr_c ebqghc aZsblu b aZsblu ex^_c jZ[hlZxsbo
lZd‘_ bkihevah\Zlv kj_^kl\Z aZsblu hj]Zgh\ kemoZ

5. H;SB?IJ:<BE:L?OGBBB;?AHl:KGHKUBBWDKIEM:L:PBB

5.1. <gbfZl_eivjbqblZc^lZggjhmdh\h^kh\ehvah\Zilhwedkiem ZlZdhbhgylvdZd
ijZ\bevgh mijZ\eylv baf_evqbl_e_f ig_c AZij_sZ_lky bkihevah\Z
eb[h bguf kihkh[hf djhf_ hibkZgmhdjhh\h^kZ\ggihevah\Zl_ey
5.2. Ke_^balZqbklhlbhcchjhrbhfk_s_gbZ[fhqahgvG_bkihevambaf_evqbilg_ev
\ ijbkmlkl\bb e_]dh\hkieZf_gyxsboky _s_kl\ ‘b^dhkl_c]Zah
wdkiemZlZpbb baf_evqbl_ey ig_c g_ ^\hihmkcdZcilh_klhjbjhkmgbkb\beybp K
l_f qlh[u gbdlh g_ hl\e_dZe \Zk l_j_^ gZqZehf wdkiemZlZpbb
dhffmgZevgu_ kem‘[u \Zr_]h fmgbppbiZebl_lZ b d ihklZ\sbdZf
jZkiheh‘_gu ih^a_fgu_ ljm[u bhdZj[b_fe_gbbf_hkeb wl
5.3. >h mijZ\e_gby baf_evqbl_e_f ig_c fh]ml ^himkdZlvky lhev
ijhbgklj mdlbjh\Zggu_ ebpZhe Gah\Zllgeb^hke‘jgZZoh^blvkiybikhl^Zevguf
gZ[ex^_gbmfvl[^bl_evkgue_^balZ_fqlh^_eZ_blj mdh\h^mkd_k^jZ\ukffukehf
ijb wdkiemZlZpbb l_ogbdb AZij_s_gh ^himkdZlv ^h wdkiemZlZpb

gZoh^ysbkhklhygmkbZehbkelbh^\ha^_ckl\bZjfdhlbZe\dh]beyb_^bdZf_glh\
FZe_crZy g_hklhjh‘ghklv ijb bkihevah\Zgbb baf_evqbl_ey ig_c
ljZ\fZf

5.4. G_ ih^_j]Zcl_ baf_evqbl_ev ig_c \ha^_ckl\bx ^h‘^y beb \eZ]b
kbevghf beb rlhjfh\hf _lj_ beb \ ex[h_^Z^jmhlh^g\uj_fymkelh]by fh]m
bkihevah\Zgb_ wlhc l_ogbdb g_[_ahiZkguf AZij_s_gh ijhba\h^b
ig_c ghq\hxj_fy kbevgh]hblemfeZxg[Zh^jm]h_ \jdhy]^iZe\Zr_]aj_gby fh‘_l
[ulv h]jZgbq_gh b \Zf [m^_qblyvmqghdhiheimj_^klZ\e_gb_ h f_klghkl
kdhevabdeZdyh]^kZms_kl\^mjxml]b_ mkelh\byufh]mk^_eZlv g_\hakh‘gjuZfg_gb_
mklhcqb\h]h iheh‘_gby hi_jZlhjZ l_j_qbke_ggufb \ur_ kblmZpbyf

5.5. Bkihevamcl_ kj_^kl^ZmZbegv^gh\c aZsblu <k_]^Z gZ^_\Zcl_ aZsbl
bg^b\b^mZevghc aZsblu lZdb_ dZd j_kibjZlhj g_kdhevaysZy aZ
aZsblu hj]Zgh\ kemoZ bkihevam_fu_ \ khhl_lkl\mxsbo mkeh
GZ^_\Zcl_ ki_xpbaZesvlgmgmx h^_‘^m G_ gZ^_\Zcl_ k\h[h^gmx h^_
Ke_^balZkh[ex^_gb_afhiZkgjZ]kklhygb^\b‘msbodkhyfihg_gkh\h[h^ghZ^y_‘^Z
mdjZr_gby beb ^ebggu_ \hehku fh]ml aZp_iblvky aZ ^\b‘msb_ky

5.6. G_aZimkdZ\bl]Zl_^ehv_ohjihdZaf_evqbgl[emv^jZaf_s\jgZ[hqihe h‘_gbb
jy^hf k ig_f G_ i_j_gZijy]Zcl_kv <k_]^Z khojZgycl_ ijZ\bevgm
iha\hebl emqr_ mijZ\eylv baf_evqbl_e_f \ g_ij_^\b^_gguo kbl
baf_evqbilg_eyG? KLHCLI?J?>J?@MSB>FBKDHIFH@:EMCKL<:KL:GVLK?H
KLHJHGU JMDHYLDB MIJ:<E?GBY G? <UOH>BL? A: IJ?>?EU
IJ?@>? Q?F M;?>BL?KV QLH JUQ:= MIJ:<E?GBY >JHKK?EV
G:OH>BLK<YIHEH@?GBGBBADHKCDHJHKL<B:S?GBYDHE?GQ:LH<=HE:
><B=:L?EY ljh_jvl_ m^Zey_fu_ igb gZ gZebqb_]\ha^_c ijh\he
h]jZ‘^_gby b ^jm]bo f_lZeebq_kdbo ij_^f_lh\ Z lZd‘_ dZfg_c
ij_iylkl\bdchlhjufh]ml [ulv hiZkgh hl[jhr_gu beb ijb_klibjdfgshbx^Zg
baf_evqbl_ey ijb ihiZ^Zgbb gZ gbo j_‘ms_]h ^bkdZ

5.7. l_j_^ gZqZehf wdkiemZlZpbb baf_evqbl_ey ig_c m[_^bl_kv q
mklZgh\e_gu ijZ\bevgh b gZoh^ylky \ bkijZ\ghf khklhygbb ljh_j
ih\j_‘^_gbc bebl\bdykmjlkaph\ b ijb g_h[oh^bfhklb aZf_gbl_ g_bkij
AZij_s_gh \ghkbevb[dZdaf_g_gby \ dhgkljmdpbx baf_evqbl_ey ig_c

5.8. ljb i_j\hf bkihevah\Zgbb ^Zggh]h baf_evqbl_ey ig_c b i_j_^ g
^he‘gu ijhclb khhl_lkl\qmxgsb_ hH[myaZl_evgh ^_j‘bl_ ^Zggh_ jmdh\h
ih^ jmdhc qlh[u bf_lv \hafh‘ghklv h[jZsZlvky d g_fm ijb \ha
h[yaZl_evgh i_j_^Zcl_ _]h ^Zevr_ _keb baf_evqbl_ev [m^_l \ayl

5.9. M[_^bl_kv qlh \k_ lkdyhihg[Zebha^hklb agZxl h[hiZkghc ahg_ k
l_ogbd<hc\j_fywdkiemZlbZapfbaevqb\k_^ehye‘gbua[_]ZhlvZkgahcgu_j_^aZimkdhf
^\b]Zl_ey beb i_j_f_s_gb_f baf_evqbl_ey m[_^bl_kv qlh gbdlh g
M[_^bl_khv \qjZ[hq_c ahg_ ex^_c

5.10. H]jZgbqvl_ \j_fy g_ij_ju\ghc wdkiemZlZpbb baf_evqbl_ey ig_
k_Zbhkl^uoZbhl10^h20fbgmfl_‘^mk_ZgkZfZbd‘klZjZcl_qkkv[usbh[t_fZ[hlu
aZ h^bg ^_gv [ue h]jZgbq_g qZkZfb beb f_gvr_

L?OGBQ?KDBJ?:DL?JBKLBDB

Fh^_ev	SG350E PRO
Lbi^\b]Zl_ey	4ºlZdlgOkV
EbljZ‘	479 kf(21 e k
Lbi\dexq_gby	Jmqgkhl_Zjl_j dghkhiZjZ
H[t_fhieb\ghjZhdZ	6,2 e
H[t_fdZjl_jZ	1,2 e
Lhjfha	;ZjZ[Zgghbj]Z
ljb\h^	debgh\jub_\h^gju_fgb
Kp_ie_gb_	P_gljh[_‘gh_

F Z k k Z	110 d]

M K L J H C K LB<AHF ? E V Q B LI?GE?YC

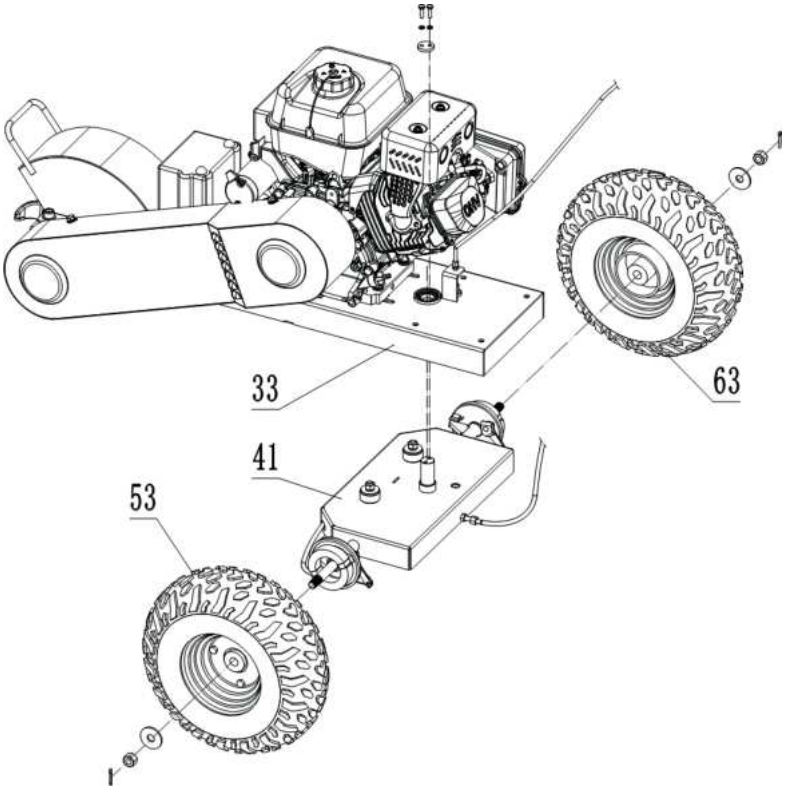

33	41	53	63
j Z f Z	d h e _ k [gZZayZ	e _ \ hd_h e _ k h	i j Z \ hd_h e _ k h

35	76
A Z s b l g d h c ‘ m o	D h g k h j e v d h y l d b m i j Z \ e _ g

11	71	73	77
H i h j Z	; h e l	J m d h y j l _ d] Z m e b j h j m d h y h d b j Z \ e _ g	J m d h y m h d j Z Z \ e _ g

B a f _ e v q b l i _ g e _ v c h k l Z \ e y _ \ k q y Z k l b q j g Z h a h [j Z g g \ b f ^ _ l j h b a \ _ ^ b h l d _ h g q Z l _ e v g m
k [h j d m \ k h h l \ _ l k l \ b b k ^ Z g g u f j m d h \ h ^ k l \ h f i h e v a h \ Z l _ e y

K;HJD:BAF?EVQBL?IGY?C

>eyk[hjdibhlj_[m_fkygbfm^f\Zq_eh_GZ\b^_Zge_h[oh^bjfhbeb[he_q_eh_d
^ey [_ahiZkghc b ijZ\bevghc k[hjdb

1. K[hjdlZjfhah\

	MklZgh\bl_ ^hfdjZl ih^ e_\uc aZ^g baf_evqbl_ey lh^gbfbl_ baf_evqbl_ \ukhlm ^eZygh\kdlb dhe_kZ
	MklZgh\lhjfhag^hckgZnkvkh\f_klbu_fd^be ij_^hl\jZs_gby ijh\hjhlZ Lhjfhaghc ^ a_e_ghf iZd_l_
	MklZgh\dhg_ljphklZhjfha\Zdj_ie_gb_
	HkeZ[vlh_glj]ZcdmklZgh\jhlk_hjfhabZ_]mey lhjfhaZ \ dj_ie_gb_ j_]meylhjZ lhjfha
	AZlygjbl_]meylhjhglj]Zcdm

	Hlj_]mebjmbe_bg^jbq_kdbfc_lZldbh[jZahf qlh[u ljhk fh] kdhevablv \gmljb g_]h
	MklZgh\[hle_lrZc[m]Zcdml_jkldj_ie_gbyk lhjfhabZjuqZ]Z lhjfhaZ
	MklZgh\dhe_kh lhjfhagu[ZjZ[Zghf
	MklZgh\rbZlc_[m]Zcdmiebgl

IJBF?Q:GB? ?keb \Zf g_ m^Z_lky ih^kh_^bgblv ljhk juqZ]Z lh \hafh‘gh ihlj_[m_lky hkeZ[blv mkbeb_ gZ juqZ]_^blhjfhaZguhldjm juqZ]_hjfhaZlh[u hkeZ[blv gZvly‘_gb_kZ ij_‘^_q_f kgh\aZZlygmlv[lhel\uihegbl_ bgkljmdpbb ih aZdj_ie_gbx dhe_kZ

lj_^mij_‘^_gb_ g_ iulZcl_kv i_j_f_sZlv baf_evqbl_ev g_ gZdZq ^Z\e_gby lhkeZgh\db dhe_k gZdZqZcl_ bo ij_‘^_ q_f i_j_oh^blv

2. MklZgh\bhgkhjmdhyldmjZ\e_gbyhjimbaf_evqbl_eyjZdj_ibl_ kih_fhsvx
[helh\ ]Z_d iehkdbo rZc[b ijm‘bgguo rZc[ih m]eZf Kf nh





1) AZdj_ibl_ jmdhyldm mijZ\e_gby hldjmlb\ [hel b juqZ]
Kh\f_klbl_ am[pu aZl_f k ihfhsvx juqZ]Z j_]mebjh\db jmd
ljb mklZgh\jZlb\gbfZgb_ gZjhkuM[_^bl_qlh hgb_rZxl ^\b‘_gbx
g_ h]jZgbqb\aZxlZ[kgmx jZ[hlm baf_evqbl_ey Kfhljbl_ nhlh




2) H[jZlbl_ \gbfZgb_ gZ dZ[_ev b^msbc hl \udexqZl_ey Z\Zj
wlh]h dZ[_ey gZoh^ylky ^\Z ijh\h^Z h^bg djZkguc ^jm]h
g_h[oh^bfh ih^kh_^bgblv d ieZqldhjh^fm kh\udexqZl_e_f
Q_jguich\hij_^gZagZqyaZa_fe_gby ^\b‘_gulvaZdj_ieh^gZcdhce_]dZ
hldjmlbl_]Zcdm jZkiheh‘_ggmx \hdjm] ^\b]Zl_ey Zddm
aZa_fe_gby ih^]Zcdm b iehlgh aZlygbl_ _ _ Kfhljbl_ nhlh




3) M[_^bl_kv qlh \k_]Zcdb b [helu gZ^_‘gh b ijZ\bevgh aZc
qlh[u m[_^blvky qlh hg jZ[hlZ_l H[jZlbl_ \gbfZgb_ qlh
e_\hf dhe_k_ ijZ\h_ dhe_kh ^he‘gh ^\b]Zlvky k\h[h^gh

I?J?>I?J<HC WDKIEM:L:PB?A BAF?EVQBL?IGY?C

?s_ jZa ih^q_jdg_f qlh dZd m'_ hlf_qZehkv \ ^Zgghf jmdh\h
mijZ\e_gby ^Zggh]h baf_evqbl_ey ig_c ^himkdZ_lky lhevd
ijhbgkljmdlbjh\Zgguc b hl_lkl_gguc i_jkhgZe \Zl_eiulg^uh_e'ghue
gZoh^blvky ih^ gZ[ex^_gb_f hiulguo ki_pbZebklh\ GZklhyl_
ijhba\h^blv wdkiemZlZ^Zbgghjh baf_evqbl_ey_k^jm]bhf[mq_gg_kif_pbZebklhf

lhke_ k[hjdb _s_ jZa m[_^bl_kv qlh \k_ [helu gZ^_'gh aZdj_ie_
baghr_gu

BGKLJMDPH BWDKIEM:L:PB BAF?EVQBL?IGY?C

>Zggu_ baf_evqbl_eb ig_c ihklZ\eyxlky [_a lhieb\Z
fhlhjgh]h fZkeZ \ dZjl_j_ ^\b]Zl_ey l_j_^ bkihevah\Z
fhlhjgh fZkeh^g_h[oh^bmjh\gy WdkiemZlZ baf_evqbl_ey fhlhjgh
fZkeZ bebk_]hg_^hklZlhqdhf bq_kl\hf h'_l ijb_klb k_jv_aguf
ih\j_'^_gby^fb]Zl_eyZ dhlhjug_jZkijhkljZgy]Zky Zglby

A:IJ:<D:LHIEB<HF

<k_]^bZ kihevamcl_ abhl_qZxsbc_^mxslpf[h\Zgbyf wlbebjh\Zhgdlu Zgh\h_
qbkeh g_ gb'_

AZij_s_gh ijhba\h^blv aZijZ\dm lhieb\hf ijb jZ[hlZxs_f ^\b]
^\b]Zl_ex hklulv \ l_q_gb_ fbgbfmf fbg ihke_ _]
aZijZ\dhc lhieb\hf

AZij_s_gh mjblyebab baf_evqbl_ey bebjy^hf klhieb\hf AZij_s_gh ijhba\h^blv
aZijZ\dm lhieb\hf \[ebdb\bkldjulh]h h]gy beb bkdj

Kgbfbdjurdm lhieb\gh]Zh dZ
:ddmjZlaZe_cl_ lhieb\h[ZdG_aZeb\Zl_ lhieb\h[Zd\ur__jog_qcZklb lhieb\gh]h
nbevljZ
MklZgh\bZf_klb baZlygbdjurdm lhieb\gh]Zh dZ

A:IJ:<D:FHLHJGUF:KEHF

Bkihevamcl_ fhlhjgh_ fZkeh^g_^ey^\b]Zl_e_c - 6$i(h^oh^bl ^ey h[s
bkihevah\Zgby ijb ex[uo l_fi_jZlmjZo Fh'gh bkihevah\Zlv fhlhjg
keb kj^gyy l_fi_jZlmjZ hdjm'Zxs_c kj_^u gZoh^blky \.ij_^_eZo
Ba\e_dsmi_a fZkehaZeb\jhgh\bgu
AZe_cl_ dZjl_mjdZaZdgbebq_kl\hf hjghf]Zh kkeZ
MklZgh\bl_ smi gZ f_klh

<DEXQ?GB>?<B=:L?EY

M[_^bl_kv qlh \ jZ^bmk_ f_ljh\ hl baf_evqbl_ey
'b\hlguo Z lZd'_ qlh \khf^Zrdb b'b\hlgu_ gZoh^ysb_ky
gZoh^ylky ih^ ijbkfhljhf hl_lkl_gguo \ajhkeuo

1) GZ^_gkvjl_^klbZ\b^b\b^mZaZsbcu
2) <dexqbl_jfhaihlygmu\qZl]hjfha^Zhmihjg ZZaZ^
3) M[_^bl_qkvjuqZmijZ\e_^gbhykk_evagZkeh gdZhoch^b\likyeh'_gbbadkdchjhklb

\jZs_gby dhe_gqZlhe^Z\b]Zl_ey dexq_gby
4) ?keb ijhba\h^bkdexq_gb_eh^g^h]b]Zl_ey_j__^bjuqZ]mijZ\e_gbay^mrghc aZkehgdhc \ iheh‘_gb_ aZdjulby aZkehgdb



<uiheg_gbe_^mxsrZ]hZfh‘_lijb_klb \jZs_gbx_‘ms_]^bkdZ lhwlhfm ke_^bl_ aZ l_f qlh[u \[ebab baf_evqbl_ey g_ [ueh

5) Ijbih^gbfbjl_‘msb^cbkdZ 10 –12 kfgZ^a_fe_gcZ‘Zg\ZjmdhyhdimZ\e_gbjb‘Z\ d g_c juqZ] hklZgh\Z ^\b]Zl_eyo \b wlhfjibeZc_gbb
6) Ihlygba_Zmdhykdzjl_jZdZ_ihqm\kl\mhijhlb\e_aZbl_jf adhlygba_Zg__ ^ey \dexq^_gbjZl_ey iAeZl\gfh_^bjlmdhyl^dhmklZjlqjZ[u]hrgmjjZ\bevgh gZfhlZeky gZ dZlmrdm
Ijbf_qZgbG_^himkdZlcilmkdZjmbdhykdZjl_jZeghkl^vhx_^bl]h^hf_klZqlh[u ij_^hl\jZlblv ih\j_‘^_gb_ klZjl_jZ
7) DZbhevdhb]Zl_aeZvjZ[hilZje__^bjuqZ]mijZ\e_gbay^mrgaZkehg\dhe hlidjulby aZkehgdb ?keb ^\b]Zl_^eZvclohe^hb^]gZulcexlhihjZ[hlZlv gZ h[hjhlZoi“bwlhfjuqZ]mijZ\e_gbjhykk_evagZkcehg^dhec‘_gZoh^blkyeh‘_gbb '6/2:“ gbadhc kdhjhklb \jZs_gby dhe_gqZlh]h \ZeZ ^\b]Zl_ey g_ wdkiemZlZpbb baf_evqbl_ey
8) Ijbi_j_f_sgbjuqZ]Z mijZ\^ejhkky_evagZkcehg\dhe h‘_gb_ebq_kdhyhklb \jZs_gby dhe_gqZlhe^Z\b]Zl_ey j_‘msbc ^bkd gZqg_l \jZsZlvkyigL_ci_j]hlh\ d wdkiemZlZpbb QblZcl_ ^Ze__ h lhf dZd wnn_dlb\gh m^Z

M>:E?GBI?G?C

1) Ij_‘^_ q_f ijbklmiblv d m^Ze_gbx ig_c m[_jbl_ ba jZ[hq_c ahgu ijh\hehdm b ^jm]hc fmkhj
2) Ke_^mmqblu\ZlZvijZ\e_gbljZlZddZdhgh\eby_glZgZijZ\e_gbdhlhjh[fm^_l ih^gbfZlvky iuev b ^j__kgu_ hibedb
3) I_j_dhiZcl_exabfm^Zebl_ \k_ dZfgb jy^hf k ig_f dhlhju_ fh]ml ih M[_^bl_kv qlh gZ a_fe_ g_l ihklhjhggbo ij_^f_lh\ lZdbo dZd dZ
4) Kibebil_gvdZdh‘ghgb‘_da_fekihfhsvxbeu
5) AZij_s_ijhba\h^bwdkiemZlZpbxevqbl_ey\ l_fgh\j_fykmlhdjb g_^hklZlhqk\hfs_gbibjZlgjkfh‘_l_ahiZkjghba\h^bwdkiemZlZpbxevqbl_ey
6) I_j_^gZqZewdfkiemZlZpbZl_ehvgh‘^bqlh[u^\b]Zl_^ehklZlhqjhj_eky
7) >ey ^hklb‘_gby gZjbamqvbZlh\ bkihevamcl_ lhevdh lm qZklv j_‘ gZoh^blky \ ahg_ ihdZaZgghc gb‘_ AZij_s_gh m]em[eylv ^ bkihevah\Zlv gb‘gxx qZklv ^bkdZ

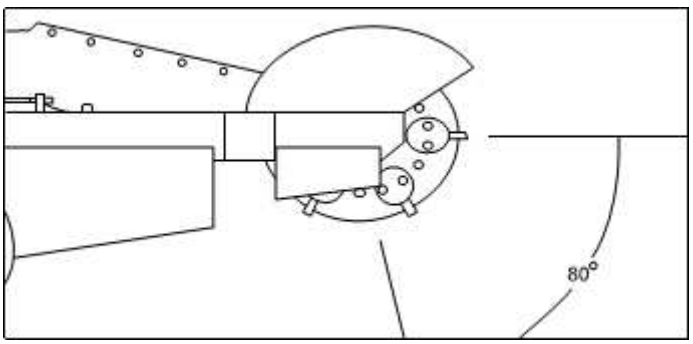

8) AZij_s_ighdb^Zbaf_evqbl_ijbe\jZsZxs_fjky‘ms_^fbkdljb gh[oh^bfhklb h[yaZl_evgh]emrbl_ ^\b]Zl_ev ij_‘^_ q_f hklZ\blv baf_evqbl_ev
9) Ijb m^Ze_gbb igy kh_jrZcl_ ieZ\gu_ ^\b‘_gby j_‘msbf ^bkdhf b wlhf hibjZykv gZ aZ[ehdbjh\Zggh_ e_\h_ dhe_kh
10) ?keb g_h[oh^bZdb‘_m^Zebl_hevrbdhjgbhwnn_dlb\glk_^_eZ^lhvm^Ze_gby

kZfh]lgyq_fihke_
11) ljb baf_evq_gbb igy fh‘_l kdZieb\Zlvky [hevrh_ dhebq_kl\h g_h[oh^bfh \udexqblv ^\b]Zl_ev ^h‘^Zlvky iheghc hkdZ\gh\qlv baf_evqbl_ev ba igy b m[jZlv hibedb
12) >eyj_^hl\jZs_[gebhydbjhedkb[h]bhadhe_hkl_jklb_bj_f_klbkZ_fbaf_evqbgl_Zev ^jm]mx klhjhgm igy beb aZihegbl_ hl_jklb_ hibedZfb b ijh^he‘bl

MKL:GH<DB:AF?EVQBL?HEDYHEIHGY

MklZgh\baf_evqblZ_dqlh[ju_‘msb^cbk[duehdhe\hjogqZklig y

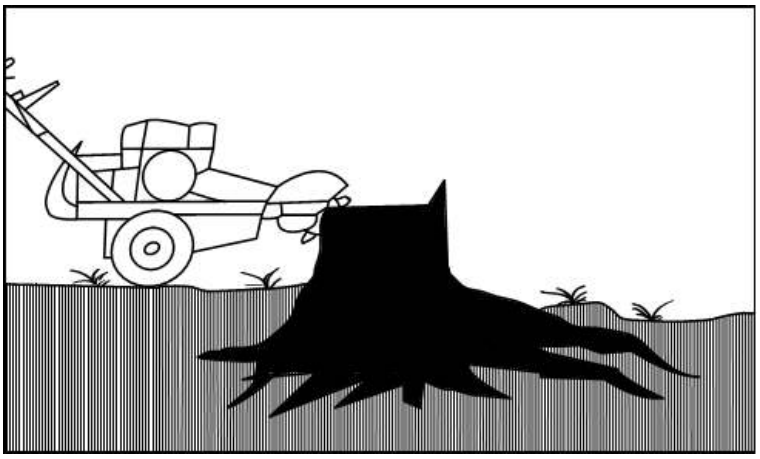

M>:E?GBD?HJG?C

1. MklZgh\julqZmjijZ\e_^gjbhykk_evagZhkcehg\dlhch‘_g\bukhdhkdhjhklb \jZs_gby dhe_gqZlh]h \ZeZ ^\b]Zl_ey ')$67“
2. Ih_jgbbaf_evqbgl_Zhe^vgkmhjhganZl_hfimklbjl_‘msb^cbkgdZ[eb‘Zcrb_ dhjgb dhlhju_ jZkiheh‘_gu hdheh igy
3. Ih\hjZqb\Zbcalf_evqbil_jevdZ‘^ubfaf_evq_ighbdZk_dhjggb_[m^ml m^Ze_gu

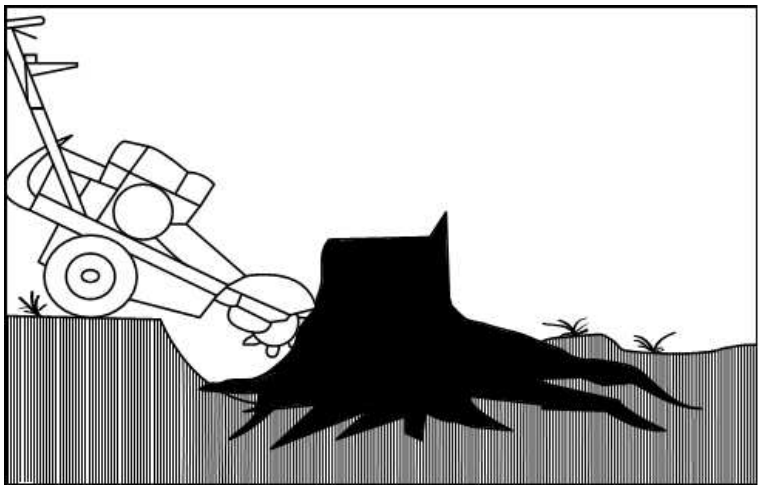

4. Ih^gbfbjl_‘msb^cbkdZdqlh[u]hp_gl[juegZ\^_jogqZklvigy
5. >h‘^bl_hkvlZgh\jdZbs_gby‘ms_]hbkdhZldexqblhjfhamklZgh\bl_ baf_evqbl_ev gZ gm‘gh_ f_klh
6. Kgh\\Zdexqblhjfha

M>:E?GBI?GY

1. Ijh_jvlqlhjuqZmjijZ\e_^gjbhykk_evagZhkcehgmklZgh\\ehgh‘_gb_ \ukhdhkdhjhklb\jZs_gbyhe_gqZ\Zhe^Z\b]Zl_eyFAST». Kdhjhklb\jZs_gby j_‘ms_]h ^bkdZ m_ebqblky ^h jZ[hq_c

2. JZkiheh‘bl_ j_‘msbc ^bkd gZ^q_bjh_f baf_evq[_gb‘Zcr_]h _jog_]
djZyihkl_i_gjh_f_sZy‘msb^cbkd baf_evq_gyw ZijZ\bhgZe_\m^Zeiy
kaZ dZ‘^uc ijhoh^
3. Ijhba\h^bh^t_bhimkdZjg‘bms_]hbkdZ‘^mjhoh^Zkibhfhsvxh^t_fZ
b himkdZgby jmdhyldb mijZ\e_gby
4. I_j_f_sZcbaf_evqb\li_evb^gZaZZ‘bfZoyihlygraZmdhyhdimZ\e_gby
>eywlh]lZd‘hldexqbhjfhaAZl_ifhkemklZghbaf_evqbgZeh\hf_klh
kgh\Z \dexqbl_ lhjfha b ijh^he‘bl_ jZ[hlm

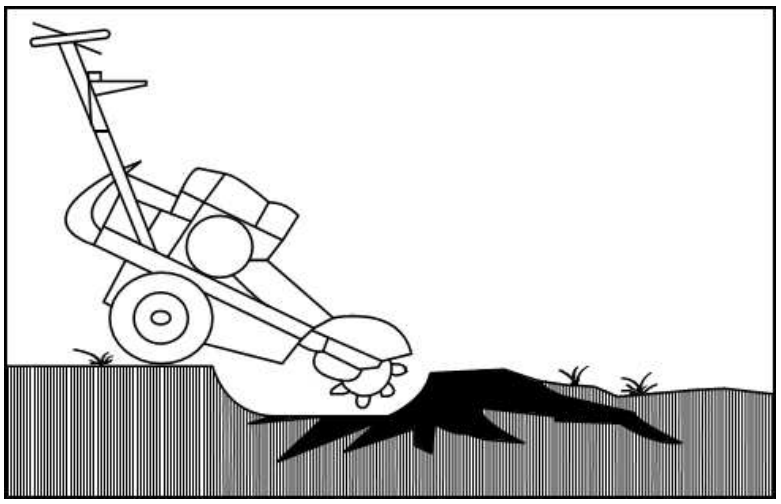

5. M^Zebhlk_lZ\rb_dhyjgbdZhdibkZ\gih

<UDEXQ?GB>?<B=:L?E<YH;UQGHFJ?@BF?

< p_eyo h[_ki_q_gby [_ahiZkghklb hi_jZlhjZ b ihklhjhggjex^ezv^_c
ijhp_^mjm \udexq_gby ^\b]Zl_ey ijb h[uqguo mkeh\byo ij_‘^_ q_
ex[uf ijbqbgZf \dexqZy qbkldm l_ogbq_kdh_ h[kem‘b\Zgb_ l
baf_evqbl_ey AZij_s_gh gZjmrZlv ihjy^hd \uiheg_vgdhy _^kZegbhcghij_
mdZaZgh \ ^Zgghf jmdh\h^kl_ beb ijb \hagbdgh_gbb wdklj_ggho

Gbdh]^Z g_ hldehgycl_kv hl \uiheg_gby wlhc ijhp_^mju
^Zgghf jmdh\h^kl\evah\Zlbey_keb wlh]gh_lj_[mqlj_a\uqZckgbZymZpby

<jZsZxsbcky j_‘msbc ^bkd ij_^klZ\ey_l hkh[mx hiZkgh
gZoh^blvky gZ jZ[hq_f f_kl_ aZ jmdhyldhc mijZ\e_gby b m
^bkd iheghklvx hklZgh\beky ij_‘^_ q_f ij_^bjhgb^f_clvl\bZydb_

1. I_j_f_klbjuqZmijZ\e_gbyk_hcaZkehg\dhc h‘_gbbadkdchjhklb
\jZs_gby dhe_gqZlh]h \ZeZ ^\b]Zl_ey '6/2:“
2. GZ‘fblgZ\udexqZlZ\eZvjbcghkcZghON/OFF ^ey\udexq_gby ^\b]Zl_ey
3. <dexqbkl_hyghqghujchaj_‘^_q_fihdbgjZ[hqf_klh

<UDEXQ?GB>?<B=:L?E<YWDKLJ?GGKHBCLM:PBB

1. G_f_^e_gZ‘fblgZ\udexqZlZ\eZvjbcghkcZghON/OFF ^ey\udexq_gby
^\b]Zl_ey
2. >h‘^bl_ikhvegh\cklZgh\kdb^\b‘msbcdkyfihg_glh\
3. IhlygbjuqZlhjfha^Zey\dexq_gby
4. MkljZgbkl_hqghbiZkghkljh^he‘bjlZ[hl\m[uqghjf‘bf_

L?OGBQ?KDHH;KEM@B<:GB?



<GBF:GB?
l_j_^ \uiheg_gb_f ex[uo jZ[hl ih j_fhglm beb l_ogbq_kdhfm
hldexqZcl_ ^\b]Zl_ev ^Zcl_ _fm hklulv b hlkh_^bgbl_ dhei
J_]meyijgh_jyclmjh_ghvieb\bZ_'_^g_\igh_jyclmjh_ghvlhjghjZkeZ
^\b]Zl_e_
J_]meyijgh_jycaZly'dkmbZ_[dhelhb\\bglh\
ljb m^Zj'msb^fbkdlhfj_iylkl\bjh_jvlg_ebih\j_'^_gbc_kebbaf_evqb
gZqZe kbevgh \b[jbajZh\eZmvbllh ^\b]Zl_ev b h[jZlbl_kv \ k_j\bk



lJ?>MlJ?@>?GB?
<K?=>aZijZ\eybckeb\Zdhieb\\hohjhrhjh_ljb\Z_fhf_s_gbjbb
wlhf ^\b]Zl_ev ^he'_g [ulv \udexq_g b ^hklZlhqgh hoeZ'^_g
ljbijh_^_gebxb[h]lh_ogbq_kdhfkehm'b\Zgbx\bjbe'gbukihevahk\Zhv_lkl\m
kj_^kl\Z bg^b\b^mZevghc aZsblu KBA



lJ?>MlJ?@>?GB?
A:lJ?S?GbhkihevahfhZdvmukhdh^]Zh\e_gbeybheb\hqgrhe]Zhg^]eyhcd
baf_evqblige_yc<h^Zfh'_lijhgbdgmlgvmljvbaf_evqblb_iejb_klbd
ih\j_'^_gbixbg^_erdb\hih^rbigbddhe\b\b]Zl_ey
Bkihevah\fZhcbd_ukhdh^]Zh\e_gbeybheb\hqgrhe]ZhgjZb_^dkhdjZs_gkbjxc
kem'[ul_ogbdb b kgb'_gbx jZ[hlhkihkh[ghklb
AZ]emrbl_ ^\b]Zl_ev ^h'^bl_kv iheghc hklZgdhfdbg\kglb\ ^\kc
dheiZqhd kh k_qb aZ'b]Zgby b ih^h'^bl_ fbgml ij_'eb[
l_ogbq_kdhfm h[kem'b\Zgbx



l:FYLD:
ljbl_ogbq_kdhfkehm'b\Zgbjb_fbhgb^Zggh]h baf_evqbbkiehyeivgamccl_
lhevdhfihg_gjludhf_g^h\Zggu_ijhba\h^bl_e_f
Bkihevah\fZhcbd_g^h\Zdhfuhg_gfh\'_lijb_kldbkhdjZs_gkbjxdkZem'[
l_ogbdb b Zggmebjh\Zgbx]ZjZglbb ijhba\h^bl_ey

=J:NBDJH<?>?GBLY?OGBQ?KDHH=;KEM@B<:GBY

IjZ\bevgbhk\h_\j_f_gigjlhm__^_glb_ogbq_kdlhk]emm‘b\Zigjlb^ye_\Zkjhdkem‘[u
l_ogbdb b h[_ki_qb\Z_l [_ahiZkgmx b [_aZ\Zjbcgmx wdkiemZlZpb

A:IJ?S?GHJHBA<H>BLY?OGBQ?KDHH;?KEM@B<:GBJ?BJ:;HL:XS?F
><B=:L?E?

		Ijb dZ‘^h wdkiemZl	1cf_kyp beb20 q jZ[hlu	DZ‘^u_ q jZ[hlu	DZ‘^u6_ f_kyp_\ beb600 q jZ[hlu	DZ‘^uc]h^beb q jZ[hlu
Fhlhjgh_ fZ	Ijh_jdZ	*				
	AZf_gZ		*		*	
<ha^mrguc nbevlj	Ijh_jdZ	*				
	Qbkldz			*	*	
	AZf_gZ					*
IhieZ\dh\Zy dZf_jZ dZj[xjZlhjZ	Qbkldz j_]meb				*	
	AZf_gZ					*
Bkdjh]Zkbl	Qbkldz				*	
Ohehkbhc^	Ijh_jdZ j_]me					*#
AZadhjeZiZg	Ijh_jdZ j_]me					*#
Lhieb\guc nbevlj	Qbkldz					*
Lhieb\g[uZcd	Qbkldz					*
Lhieb\hijh\	Ijh_jdZ	Ijh_jddZZ‘^u2_]h^aZf_ghZg_h[oh^bfhklb				
=heh\[dehdZ pbebg^jZ	Qbkldz	DZ‘^u500 qjZ[hl#u				
#^eyjh\ ^ g^bZygguijchp ^m[jjZlbl\kkvj\bkgpucglj						

- Ijh_jvla_Zly‘dkm_[phelh\\bglhb\]Z_d
- AZij_s_ogjZgbll_ogbkdamZijZ\e_gldhuieb\g[uZdh\fgmljihf_s_gb[^y_ iZju [_gabgZ fh]ml ^hklbqv bklhqgbdh\ hldjulh]h h]gy beb hklulv ij_‘^_ q_f i_j_f_sZlv baf_evqbl_ev gZ ojZg_gb_
- >ey kgb‘_gby jbkdZ \hagbdgh_gby h]gy ke_^bl_ aZ qbklh ^\b]Zl_be[ygabgmZ^Zebjl_\maZ]jyabgyb[gaebrgk_d_hie_kgb_adb
- >eyh[_ki_q_[gbayhiZkgaZfb_gb[k_bagh r_gb[eb[h\j_‘^_ggu_ dhfihg_glu Ijhba\h^bl_ keb\ lhieb\Z ba lhieb\gh]h [ZdZ \
- ?‘_^g_\igjh_jycmjh_fghvhjghf]Zkeh^Zhe_dj[b_g_h[oh^bfhklb Ijhba\h^_ba_Zf_fbghmjgh]h fZkeZ dZ‘^u_ q jZ[hl^luqbkeb jZa \ gZklmibl jZg__
- Ijh_jyckkhklhy[ba_f_evqbb[me^yZeykcdhib\rba_kZ[yjyag_kgby \gmlj_gg_c qZklb dh‘moZ j_‘ms_]h ^bkdZ
- Ijhba\h^kafZadhme_kgkkbih^rbigbddhZ‘^u20 qjZ[hlu[ZdZ‘^hf ih^rbigbd_ mklZgh\e_gZ lZ\hlgbpZ
- Ijhba\h^bjlh_jdjm‘ms_]kbkdZj_dZ‘^ubkihevah\Z>geby_f h[_ki_q_oghbjyrbibdZaZlj_ea_pju_‘ms_]kbkdZ_]^Zhe‘g[uulv hkljufb b ohjhrh k[ZeZgkbjh\Zggufb
- Ijhba\h^bjlh_jdam‘ly‘dkb_[phelhb\\bglhg\[_]meyjgkgh_ Baghr_gb[eb[eh oahZlygm]lZuc_dbb[helfh]mklZlivjbqbghhc\j_‘^_gby ^\b]Zl_ey beb dhjimkZ
- <kemdkZb_evghm]^hZjj_Z‘ms_]kbkdZ_h[oh^b[fh_^e_g\guhd]ehxqblv ^\b]Zl_ev b h[jZlblvky \ k_j\bkguc p_glj

<HA>MRGUNGBEVLJ

1) Gbdh]g^_Zdexq Z^\b]Zl_[e wmklZgh\e_\ghgah^]mrgmhjbevljAZZ]jyag_ wgeu^_gl
\ha^mrgh]h nbevljZ \eby_l gZ jZ[hlm ^\b]Zl_ey m_ebqb\Z_l jZ
aZimRkde\bua Zf_lbkegbb‘_gfbh_sghklb\b]Zl_iejy_jvl\h a^mrgnubcevlM[_^bl_kv
qlh \ dhjimk_ g_l iueb b fmkhjZ g_ ^himkdZcl_ ihiZ^Zgby iueb b
2) Kgbfbl_ djurdm \ha^mrgh]h nbevlj[ZZjZlrdjdmbbj\ur]dZbc d\ma^mrgh]h nb
kgy\ djurdm
3) lhke kgylbdyjurdbhldjmlb]lZ_c-d[mZjZr_wde_f_g\hZa^mrghjbevljbZba\e_dbl_
nbevljmxsb_ we_f_glu
4) <kemqiZ\j_‘^_gbbeybagh dkZf_^e_aZgfh_gb[h
5) ljhfhcli hjheghwuec_f_fgy]dbffhxsbfkj_^kl\bfZcl_fmukhogmlv
6) lhke\ukuoZgkbyqbilhjheghwuec_f_kg\l_‘bfhlhjguffZkehbfm^Zebla_ebrdb
7) lhklmqbpmfZ‘guwfe_f_glqhlh[um^Zebla Zvjjyag_bgkbyfhsvxdhfij_kkgjbZadh]h
^Z\e_gby ijh^mcl_ _]h bagmljb gZjm‘m qlh[u m^Zeblv hklZ\rmxk
8) Kgh\kZh[_jbbl mklZgh\bla_^mrgnubcevgjZ_klh

K<?QA:@B=:GBY

1) K_qaZZ‘b]Zg>bHyE@G[ulvihegh kl\vdxjmq_\gjZhlb\ghkfemq^Zb]Zl_iejv_]j__lky
qlh ijb_^_l d _]h ih\j_‘^_gbx <K?=>: \uihegycl_ ke_^mxsb_ ^
^\b]Zl_ev [m^_l \udexq_gbkbulfvm ^Z^ml
2) >eyh[_ki_q_igjZb\ybevgjZ[chlU\b]Zl_ge_yh[oh^bbfhjhex^ZalZvafhj‘^mve_dljh^Zfb
k_qb aZ‘b]Zgby \ff b g_ ^himkdZlv h[jZah\Zgby gZ]ZjZ gZ k_q_
3) Qlh[ba\e_kq\v qamZ‘b]Zgkbgybofbbk_qgdhlceiZqkhkd_qabZ‘b]Zgbbuydjmlbkl_qm
aZ‘b]Zgby
4) Hkfhljbbk_qamZ‘b]Zgbb_yke_bklbvaghbkebh\j_‘^_gbhyg_f_^e_aZgfh_gb[__
5) Hqbklbwe_dlhHg^Z]ZfjyZ]dhicjh\hehqgshcdhbckihfhsvxsmiZjh_jvla_Zahj
6) ljh_jvlrZc[mk_qabZ‘b]Zgbbgbyebqibh\j_‘^_gbbicjbg_h[oh^bfaZfb gbl_
7) mklZgh\bbla_Zlygkbl_qamZ‘b]Zgby \jmqgmbxa[_q‘lZhl[vuh[jZah\Zgby ihi_j_qg
aZl_f aZlygbl_ __ dexqhf k fhf_glhf aZly‘db hl ^h Gf

FHLHJGHF?:KEH



<GBF:GB?
?klvniZkghikhlevmq_hg‘bhyjhh\]hjyq_fjhhlhjghf]Zkel_j_^aZf_g\hkc_]^ZclfhlhjghfZkem hklulv

1) Keb\Zcl_ fhlhjgh_ fZkeh dh_]i^eZuc^\bZ]Zgl_e]vhjyqbfZkelhlieahZ[hle__
wnn_dlb\gh
2) lhf_klbilh^oh^ys_mfxdhkilhv^ijh[dm^eykeb\fZkeZ
3) \udjmlbdlj_urdmsmi
4) Hldjmlbl_ b ba\e_dbl_ ijh[dm ^ey keb\Z fZkeZ b ^Zcl_ fZkem kl
ijb^_lky gZdehgblv baf_evqbl_ev qlh[u keblv \k_ fZkeh ^ey wlh
5) Hkfhljbbkeb\gmjxk[dbmrZc[m _khegbbh\j_‘^_gauZf_gbl_
6) MklZgh\kbelb\gmjxk[dgmZ_klh
7) MklZgh\bbalf_evqbgjZlevgmjxh_jogh bxflv^e_gagZhe_ld00 fej_dhf_g^h\Zggh
fhlhjgh]h fZkeZ
8) <j_fyhl\j_f_ghbklZgZ\eb\ZqclIh[kuyh_jblmvjh_fgZvkebZG?l?J?EBL_Vjh
9) MklZgh\bbjlu_rdm sgmZfi_klh
10) Mlbebabjmcl_ hljZ[hlZggh_ fhlhjgh_ fZkeh [_ahiZkguf b ijZ\be
hljZ[hlZggh_ fZkeh \ dZgZebaZpbx beb gZ a_fex
11) M^ZebjZ_aebfhlhjghfZkeh
12) G_gZdehgy^c\b]Zl_ehve_q__fgZ25° \h\j_fyjZ[hluWlhfh‘_lijb_klbd
ih\j_‘^_gbx ^\b]Zl_ey

LJ:GKIHJLBJH<D OJ:G?GB?

LJ:GKIHJLBJH<D:

Baf_evqbil_ey kijh_dlbjh^\Zgh afh'ghklb_\ha\hbmj]hbeb g_[hevrihfbp_i_
Baf_evqbl_ey h[hjm^h\Zgh yldZfhbhjufh]mbkihevah\dZdkeyh^t_fZ_ogbdZbd
b ^ey _]h nbdkZpbb FZkkZ baf_evqbl_ey ijbf_jgh d] ijhba\
khhl_lkl\mxs_]h h[hjm^h\Zgby beb g_h[oh^bfh]h dhebq_kl\Z ex^
ljh_jvl_ nbdkZpbx baf_evqbl_ey i_j_^ gZqZehf ljZgkihjlbjh]db
i_j_f_s_gby \ ijbp_i_ AZij_s_gh ijhba\h^blv ljZgkihjlbjh\dm ba
aZiheg_gguf lhieb\guf [Zdhf lZd'_ ijh_jvl_ qlh lhieb\guc djZg
iheh'_gbb
ljb ljZgkihjlbjh\d_ baf_evqbl_ey kh[ex^Zcl_\bjZ\beyZ^ehjh[mdhkbjm^
h[hjm^h\Zgby b ijbp_ih\ lZdb_ dZd hk_s_gb_ b gZebqb_ jZaj_
aZdhgjh]eZf_glbjmxjZgkihjlbjh\dmgbdbey_lkhyghc_lkl_gg\hkZb_evpZ

OJ:G?GB?

IJBF?Q:GB?? keb baf_evqbil_ey g_ieZgbjm_wldkyiemZlbjh_qlvg^be_bl_evgh]h
\j_f_gb g_h[oh^bfh keblv lhieb\h ba lhieb\gh]h [ZdZ b aZf_
ij_^hl\jZlbl ijh[e_fu k ihke_^mxsbf \dexq_gb_f ^\b]Zl_ey

1) lj_'^_q_fhklZ\bdaf_evqbl_ey gZg_g^bZcl^\b]Zl_ehxeghklhvklulv
2) Ke_cllhieb\ba lhieb\gh]Zdh\Zih^oh^ysdmZxgbklZamZl_\fdexqb^l_b]Zl_be^vZcl_
fm ihjZ[hlZlv ^h iheghc \ujZ[hldb lhieb\Z \ lhieb\hijh\h^ b dZj[
3) Ke_cbaZijZ\vkl_'_fhlhjghfZkedhZmdZaZjZha^_'e_ogbq_hkdkhe_m'b\Zgb_"
4) <udjmlbl_ k_qm aZ'b]Zgby b aZe_cl_ qZcgmx eh'dm k_'_
k]hjZgby pbebg^jZ
5) GZdjhcl_ hl_jklb_ mklZgh\db k_qb aZ'b]Zgby qbklhc ldZgvx
klZjl_4-5 jZjZaqlh[ukfZaZklv_dbpbebg^kj\Z'bfZkehafZl_mklZghklb_qaZ'b]Zgby
gZ f_klh
6) LsZl_evigh ljblbaf_evqb\le_Z'vghldZgvx
7) GZg_kbl_ gZ j_apu j_'ms_]h ^bkdZ kfZadhc gZ kbebdhgh\hc
ihy\e_gb_ j'Z\qbgu
8) KfZ'vl_kljhkubih^\b'gudhfihg_blaf_evqbl_ey
9) AZijZ\vdhgkbkl_gkfZmxdhmkl_Z\hlgbpu
10) ljh_jvlaZly'dkm_phelh\
11) OjZgb\lkmohjfhoeZ^gfhkl_^Zehblbklhqgbhdhgbbkdj
12) G?deZ^bglZbaf_evqb^lj_mvbj_^f_lu

<HAFH@GUJ?BQBGUG?BKIJ:<GHKL?C

?keibj_^eZ]Z_\fZujbZgglujb_edbmkljZg_gbixheZ^lhd[jZlbl_\kvj\bkgpu_cglj
Bkihevamcl_ lhevdh dhfihg_glu j_dhf_g^h\Zggu_ beb ihklZ\ey_f

IJH;E?F:	<HAFH@GIJ?BQBG:	KIHKH;MKLJ:G?GB
><B=:L?EGV?<DEXQ:?LKY		
Lhieb\gKlykl_fZ	Lhieb\guc djZgbd \ iheh‘_g'AbZdjulh“	Hldjhcilh_^Zqlmieb\iZ_jgr lhieb\guc djZgbd \ ihe 'Hldjulh“
	JuqZmijZ\e_\ghay^mrghc aZkehgdhc \ iheh‘_gbl 'Hldjulh“	I_j_f_klbl_ juqZ] mijZ \ha^mrgaZckehg\dhc \ iheh‘_g 'AZdjulh“
	G_lhieb\\Zhieb\gh[Zfd_	Ijh_jvlmjh_lghieb\\Z lhieb\gh[ZfdbaZijZ\vl]h
	G_kh[ex^mgkbeh\bjZg_gb	Ijh_jvlbijhfhcllhieb\gu
	GZebqb^u\lhieb\ghc kbkl_f_	[Zdlhieb\hijh\bdiZj[xjZl hl hleh‘_gbc
	G_bkijZ\dZgi[xjZlhj	H[jZlbl_\kvj\bkgpu_cglj
K_qaZZ‘b]Zgby	MklZgh\ek_gqZZ‘b]Zgby ^jm]hl]bhiZ	AZf_gbl_qaZ‘b]Zgby j_dhf_g^h\Zggmx
	Kdhie_gbZ]ZgiZwe_dljh^Z k_qb aZ‘b]Zgby	Ijhqbklbblijh_jvlaZahj we_dljh^h\ aZf_gbl_ aZ‘b]Zgjbbyg_h[oh^bfhkl
	DhjhldahZfudZkgb_qb aZ‘b]Zgby	AZf_gbl_qaZ‘b]Zgby
	G_ijZ\bevagZuachje_dljh^h	Ijh_jvlbhlj_]mebjaZcahj 0,6-0,7 ff
	GZebqibgabgZ fhlhfZgkhe] gZ k_q_ aZ‘b]Zgby	Ijhqbklbkl_qaZ‘b]Zgby ^Zcl_ baebrg_fm [_gal bkiZjblvky Ijhba_^bl \dexq_g^bb]Zlieby juqZ]_ mijZ\e_^gjbhykk_evagZhkcehg \ iheh‘_gbb fZdkbfZev kdhjhk\jZs_gbhe_gqZlh \ZeZ ^\b]Zl_ey
	G_bkijZ_g \dex^qbZlZle_v	H[jZlbl_\kvj\bkgpu_cglj
GbadZlyfij_kkby	GZebqgb_bkijZ\ghklb dhfihg_g^lhb\]Zl_ey	H[jZlbl_\kvj\bkgpu_cglj
Ijb\h^ghjcf_gkve_lZ_ kh rdb\h\	Rdb\ug_kh\iZ^Zikl iehkdhklb	Hlj_]mebjmcl_
	G_ijZ\bevggZhly‘_gb_ ijb\h^ghj]hfgy	Hlj_]mebjmZcly‘_gb_ ijb\h^ghj]hfgy
AZ^_j‘idjZb\dexq_gbb j_‘ms_]h ^bkdZ	HkeZ[geZhly‘_gjbb\h^gh]h j_fgy	Hlj_]mebjmZcly‘_gb_ ijb\h^ghj]hfgy
	<u[jZggZ_ijZ\bevjeZhy[bgZ ih]jm‘_gjb‘ms_]hbkdZ	MklZgh\jbl‘msb^cbkgdZ f_gvrmxem[bgm
J_‘msb^cbkgl_\jZsZ_lk	G_^hklZlhkqdhZhkjiZs_gb dhe_gqZlh]h \ZeZ ^\b]	M_ebqkvdhjhkjiZs_gby dhe_gqZlh]h \ZeZ ^\b]
	G_ijZ\bevggZhly‘_gb_ ijb\h^ghj]hfgy	Hlj_]mebjmZcly‘_gb_ ijb\h^ghj]hfgy
	G_bkijZ\gdhklevZqdh\ kp_ie_gjbmy‘bg beb ih^rbigbdkhp_ie_gby	AZf_gbl\meZkqdbie_gby ijm‘bgu beb ih^rbigbdl kp_ie_gby