6 3 $ 5 (3 $ 5 7 6 ′ , 6 7

5 , ’ (5 6

5 7 &

CHASSIS

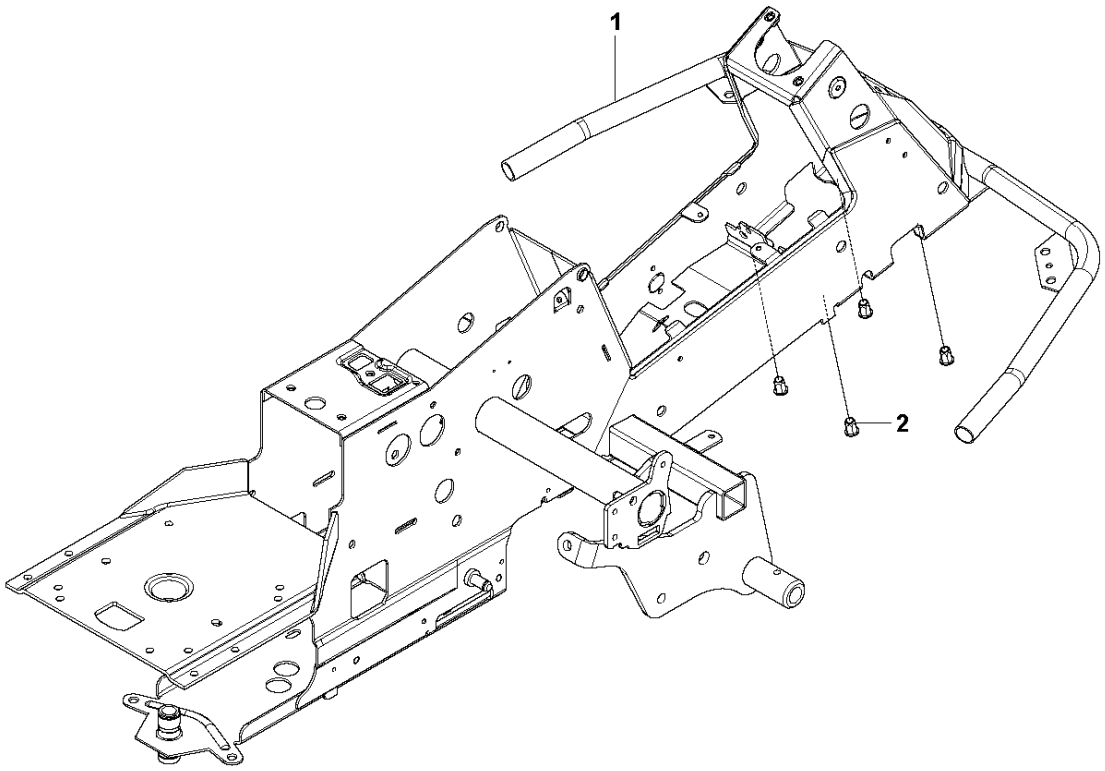

5HI	3DUW	'HVFULSWLRQ	5HPDUN	47<.,7
		&+$66,6		
		187		

CHASSIS, REAR – 1

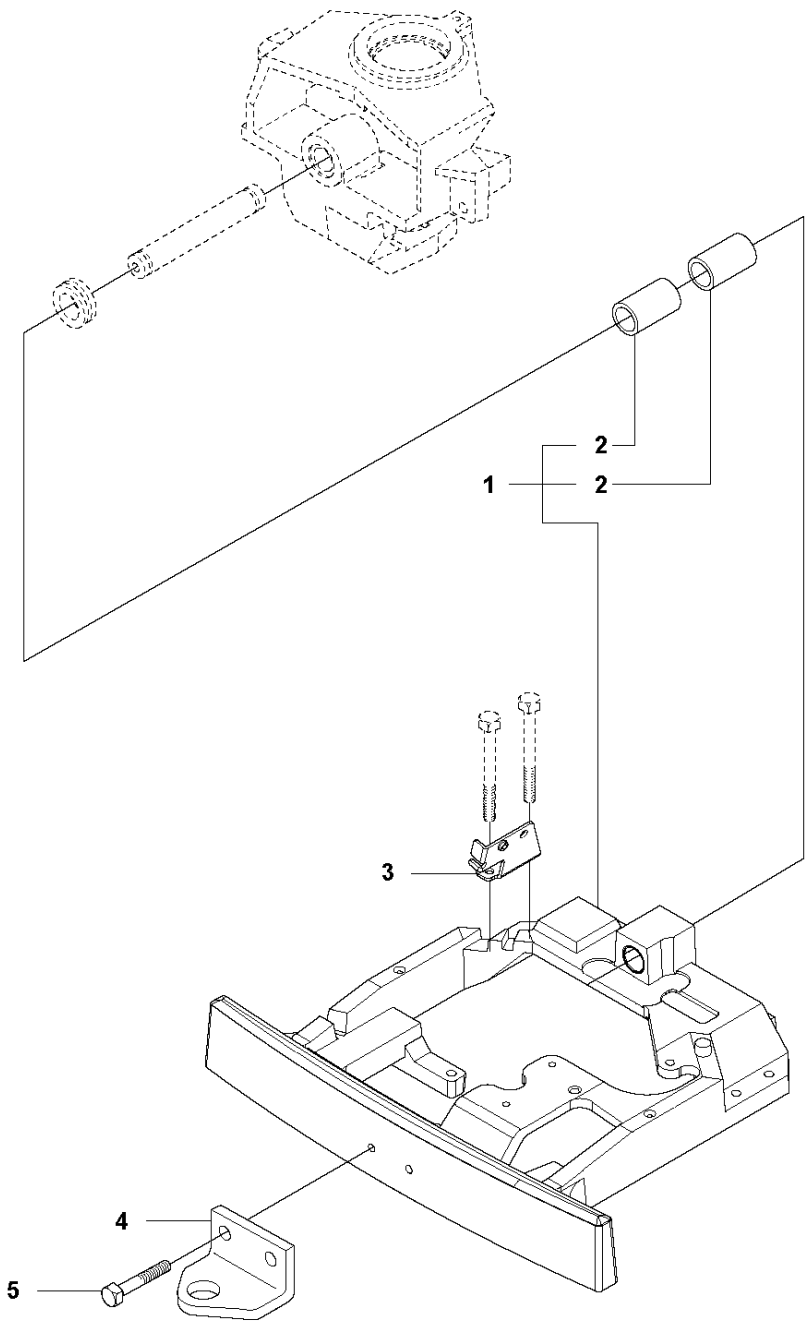

5HI	3DUW	'HVFULSWLRQ	5HPDUN	47<.,7
		%5$&.(7		
		/,'/$(5		
		%5$&.(7		
		+,7&+		
		6&5(:(++0		

CHASSIS, REAR – 2

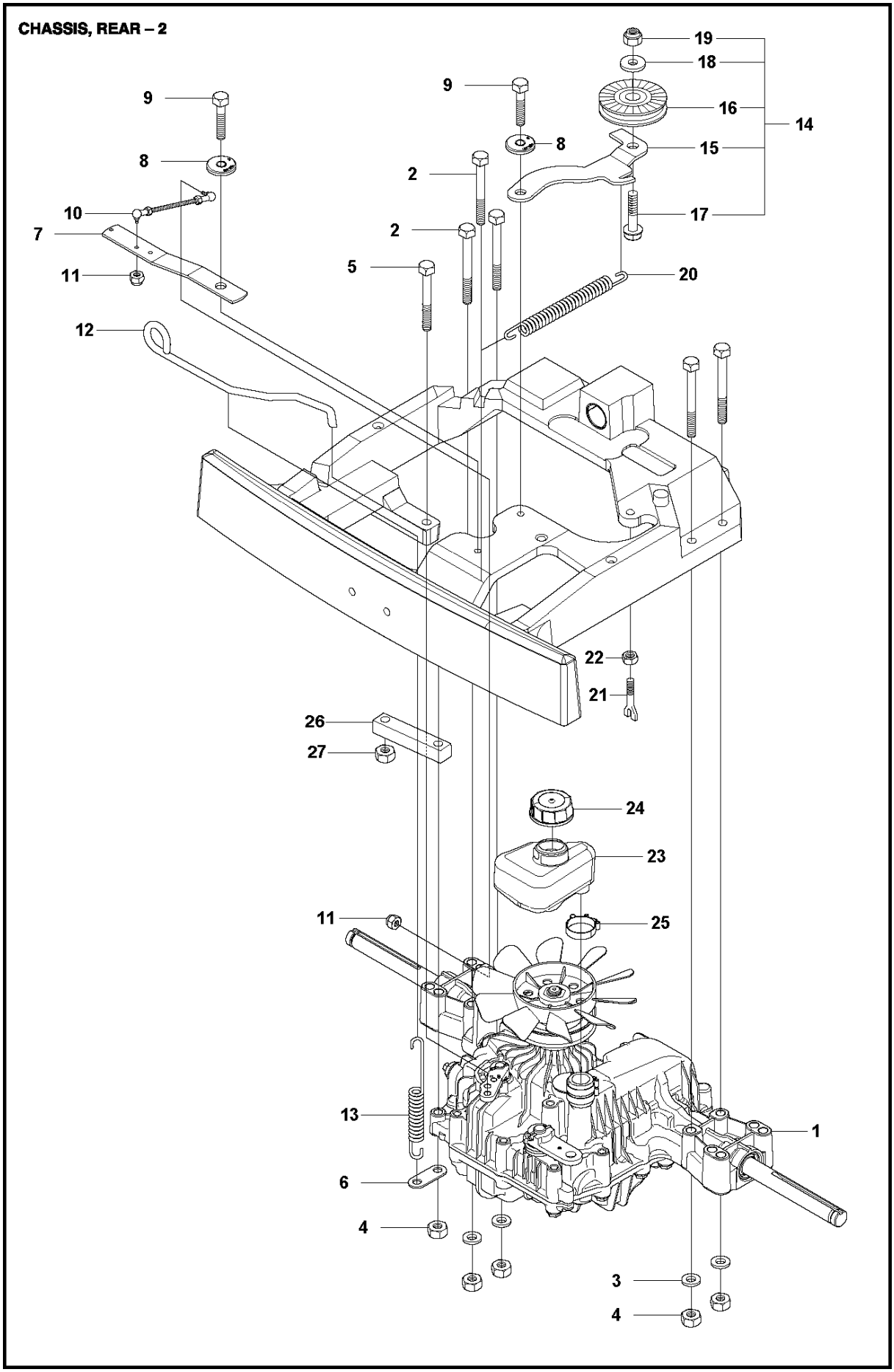

5HI	3DUW	'HVFULSWLRQ	5HPDUN	47<.,7
		75$160,66,21		
		6&5(:(++0		
		:$6+(5		
		+(;$*21187		
		6&5(:(++0	)RU	
		6&5(:(++0	)RU	
		/,1.		
		/(9(5		
		:$6+(5		
		6&5(:(++0		
		$'-867(17'2'		
		/2&.187		
		)5,.233/,1*667c1*		
		635,1*		
		%(/77(16,21($66<		
		%(/77(16,21(5		
		38//(<		
		6&5(:(++0	)RU	
		6&5(:	)RU	
		:$6+(5		
		/2&.187		
		635,1*		
		3(1'8/80		
		+(;$*21187		
		(;3$16,217$1.		
		7$1.&$3$66<	)RU	
		7$1.&$3$66<	)RU	
		+26(&/$03		
		020(17)b67(	)RU	
		+(;$*21187	)RU	

HYDROSTAT K46 EU

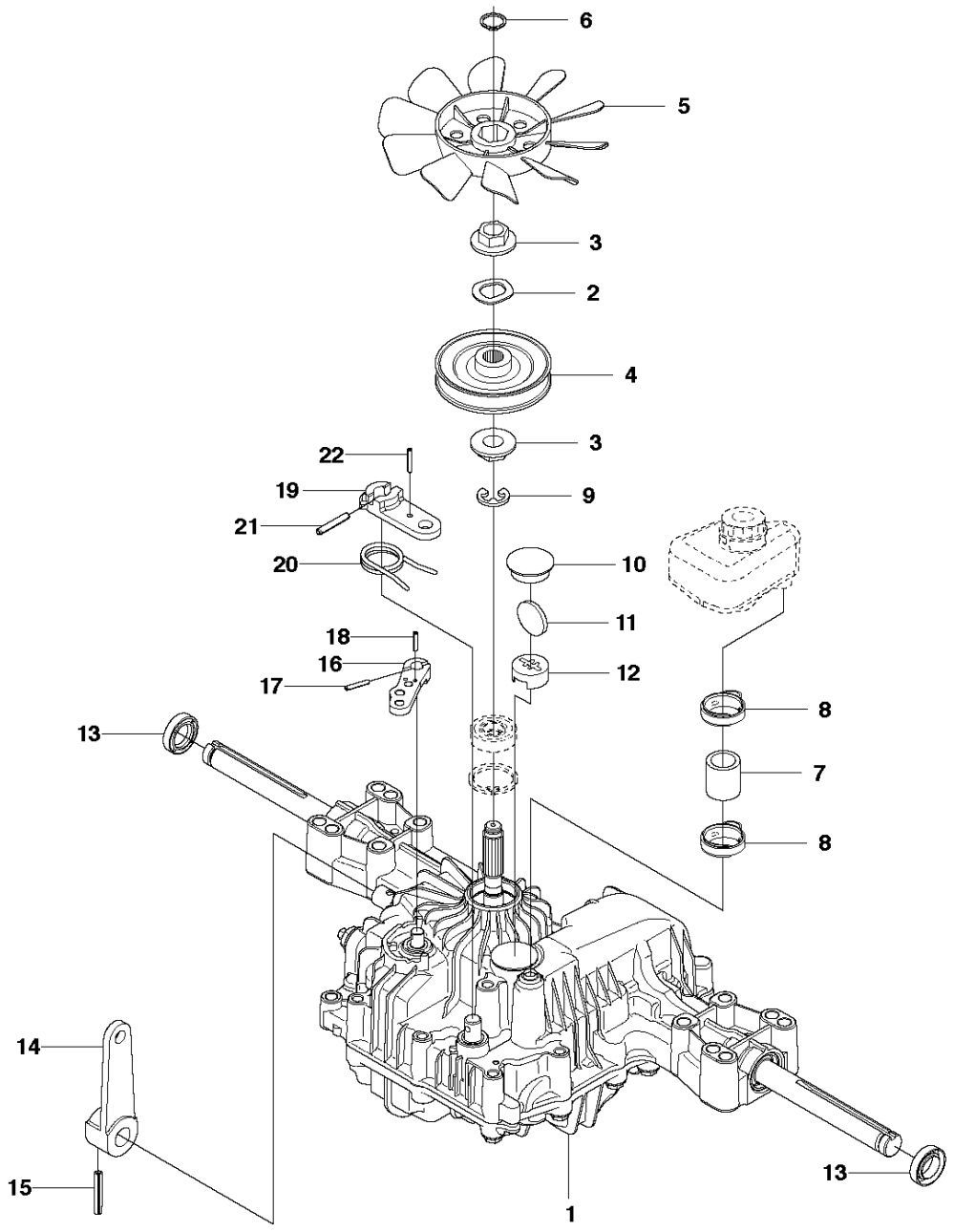

5HI	3DUW	'HVFULSWLRQ	5HPDUN	47<.,7
		75$160,66,21		
		635,1*$6+(5		
		',67$1&(		
		38//(<		
		)$1		
		&,5&/,3		
		78%(		
		+26(&/$03		
		&/,3		
		3/8*		
		0$*1(7		
		0$*1(7+2/'(5		
		6($/,1*		
		&21752//(9(5		
		3(1		
		/(9(5		
		635,1*3,1		
		3,15(7$,1,16&5(:		
		/(9(5		
		5(78516635,1*		
		3,15(7$,1,16&5(:		
		3,15(7$,1,16&5(:		

TRANSMISSION

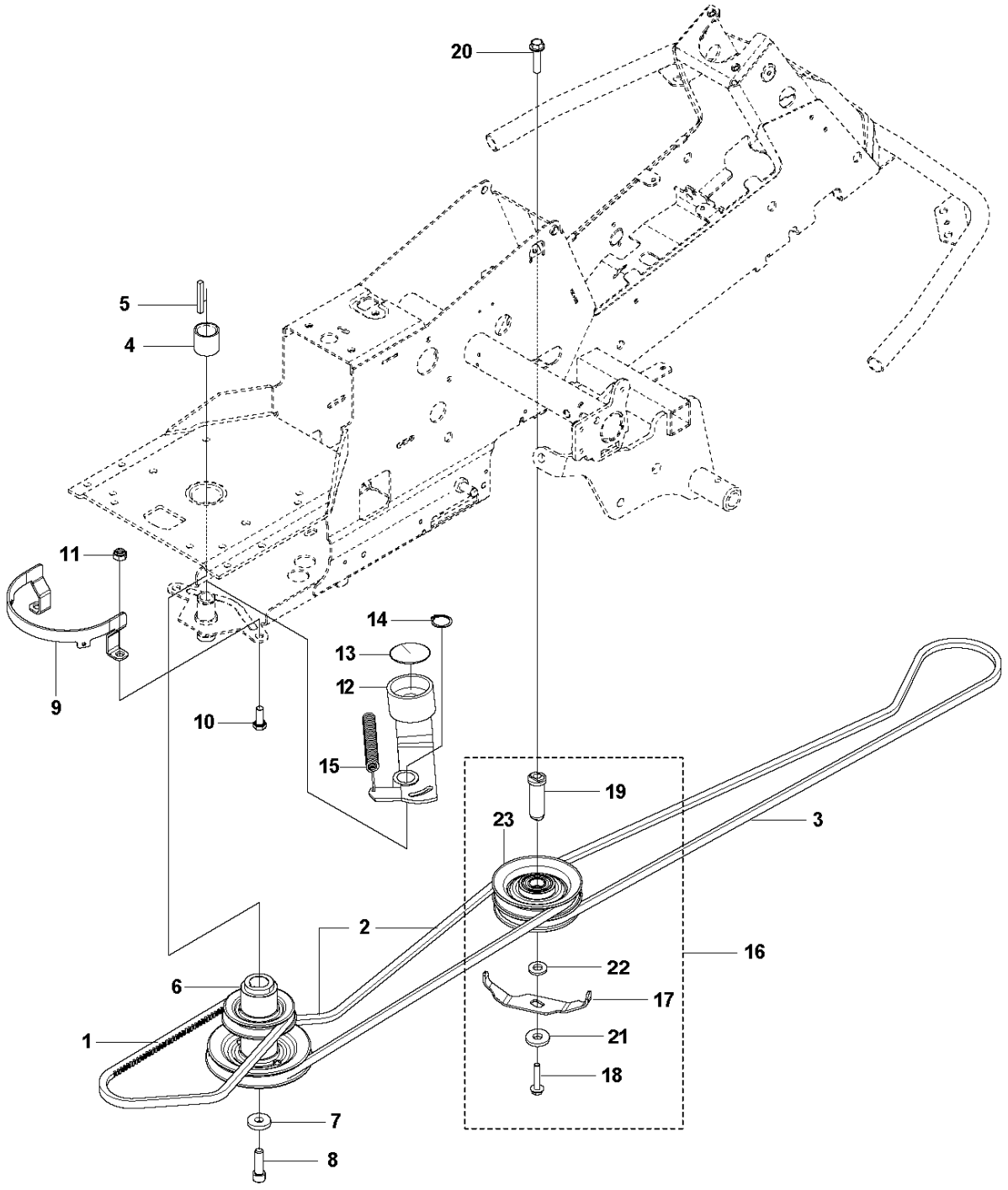

5HI	3DUW1R	'HVFULSWLRQ	5HPDUN	47<.,7
		%(/7		
		%(/7		
		%(/7	)RU	
		%(/7	)RU	
		63$&,16/(((9(		
		:('*(		
		38//(<		
		:$6+(5		
		6&5(:81&		
		%(/7*8,'(		
		6&5(:(++0		
		187		
		%(/77(16,21($$66<		
		6($/,1*		
		&,5&/,3		
		635,1*		
		38//(<		
		%(/7*8,'(		
		6&5(:		
		6+$)7		
		6&5(:(++)0		
		',67$1&(	)RU	
		:$6+(5		
		38//(<	)RU	

PEDALS

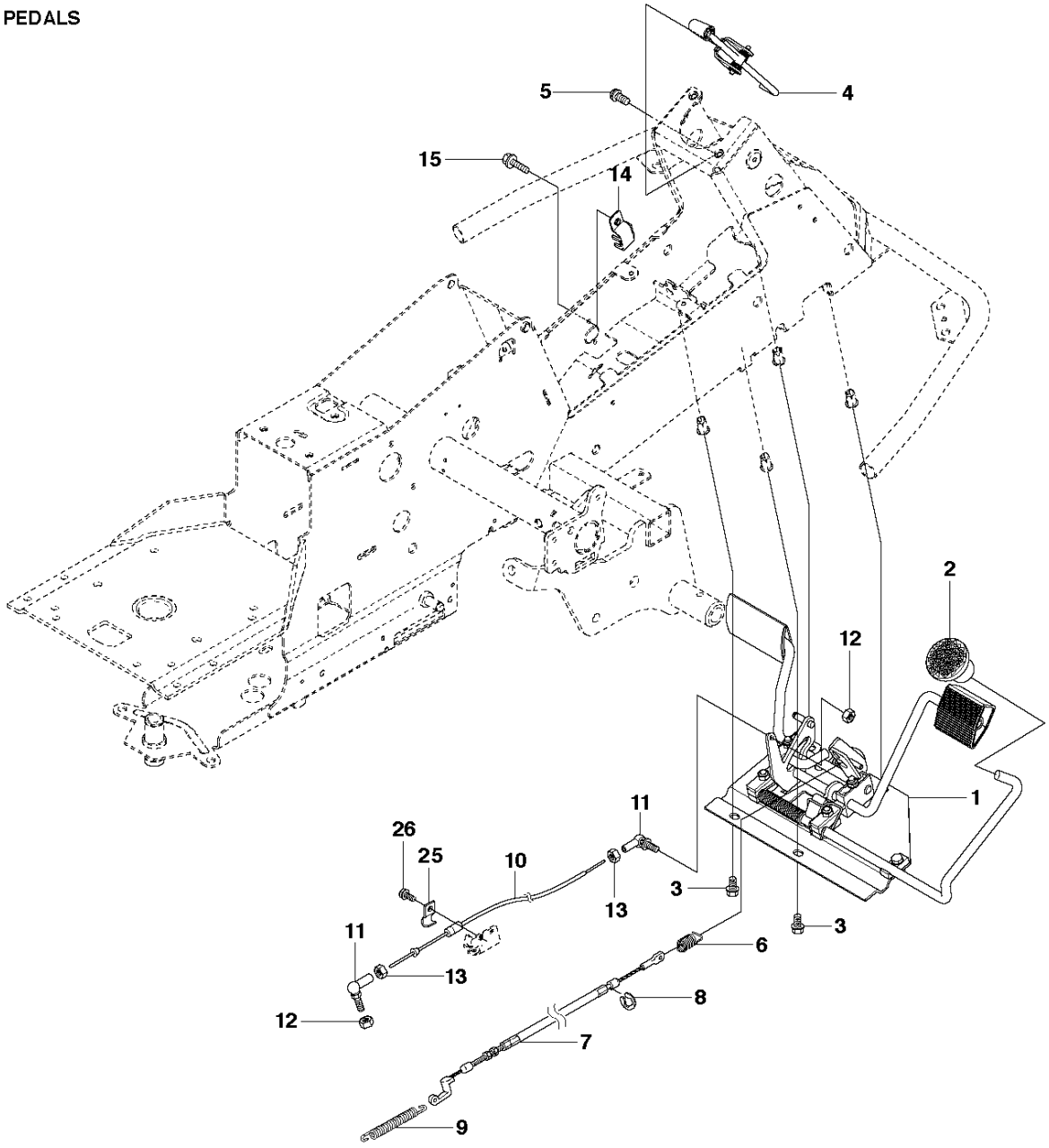

PEDALS

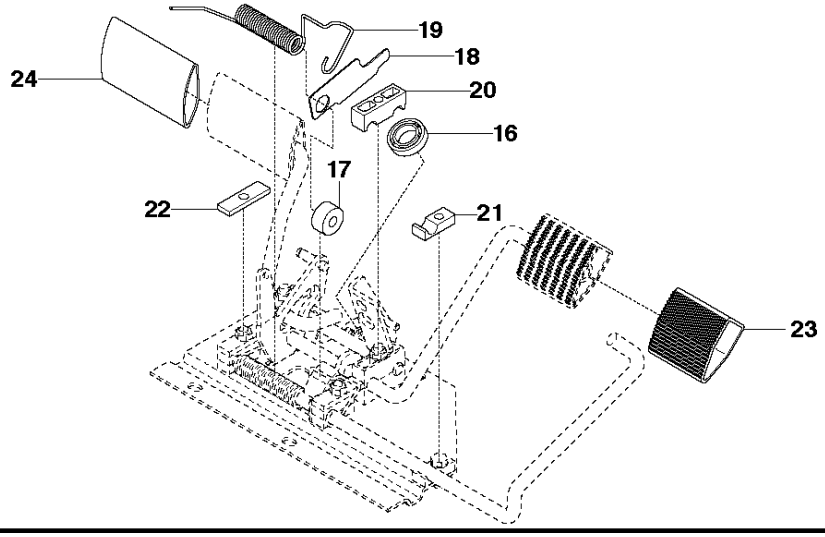

5HI	3DUW	'HVFULSWLRQ	5HPDUN	47<.,7
		3('$/3/$7($66<		
		.12%		
		6&5(:(++)0		
		%5$.(/(9(5$66<		
		6&5(:(++)7		
		%5$.(635,1*		
		%5$.(:,5(		
		(&/,3		
		'5$:635,1*		
		&217526&$%/(		
		%$/-2,17		
		/2&.187		
		+(;$*21187		
		%5$&.(7		
		6&5(:(++)7		
		%$/%($5,1*		
		52//(5		
		3527(&7,9(/$7(		
		635,1*		
		%($5,1683257		
		%($5,1683257		
		5(,)25&(0(17/$7(		
		3('$/		
		3('$/		
		&/,3		
		6&5(:(++)7		

ADJUSTER HEIGHT

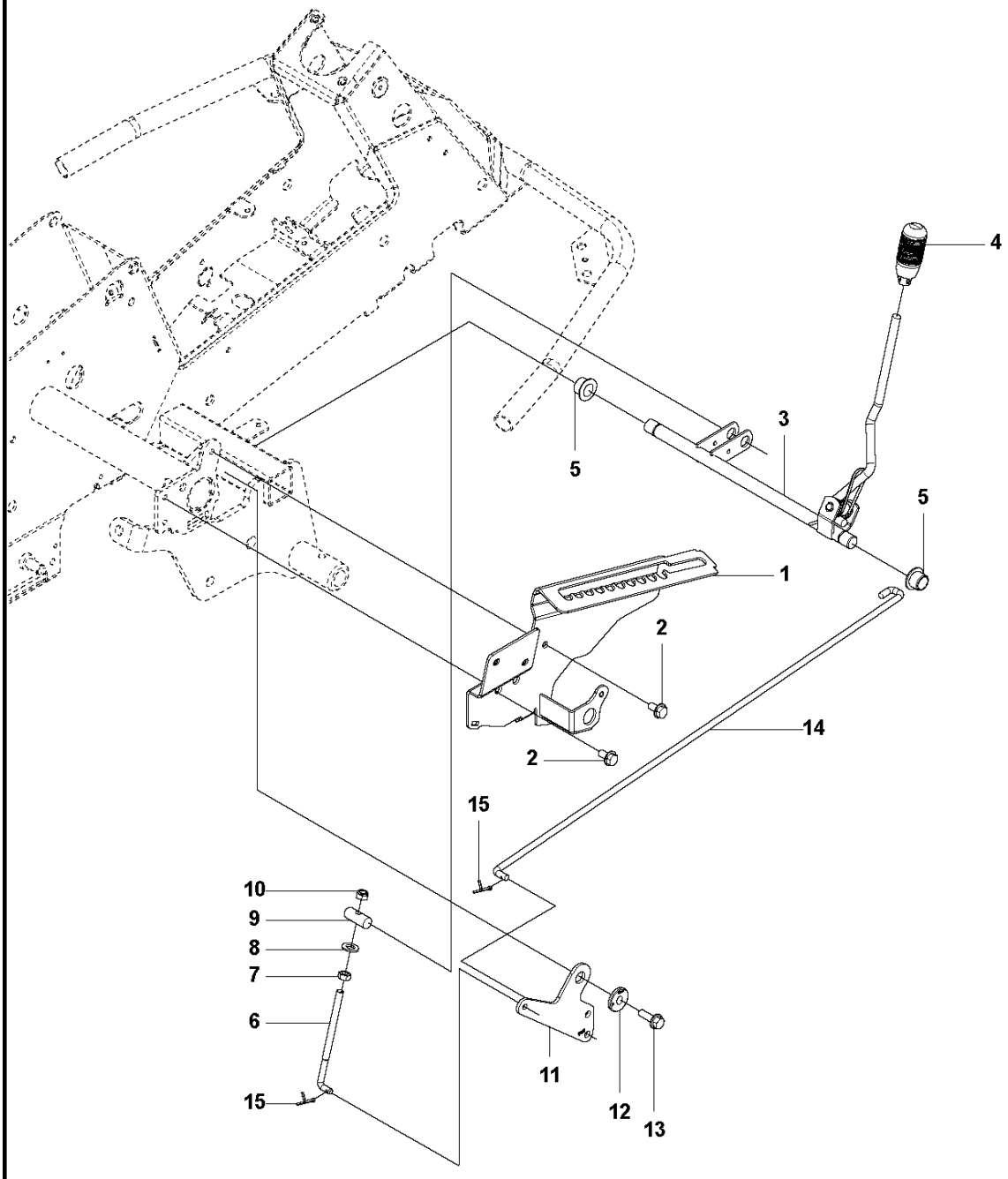

5HI	3DUW	'HVFULSWLRQ	5HPDUN	47<.,7
		%5$&.(7	)RU	
		%5$&.(7	)RU	
		6&5(:(++)0		
		$'-867(5		
		+$1'/(		
		%($5,1*		
		+(,*+752'		
		+(;$*21187		
		:$6+(5		
		3(1		
		/2&.187		
		/,1.		
		:$6+(5		
		6&5(:(++)0		
		&211(&7,252'		
		63/,73,1		

CONTROL UNIT

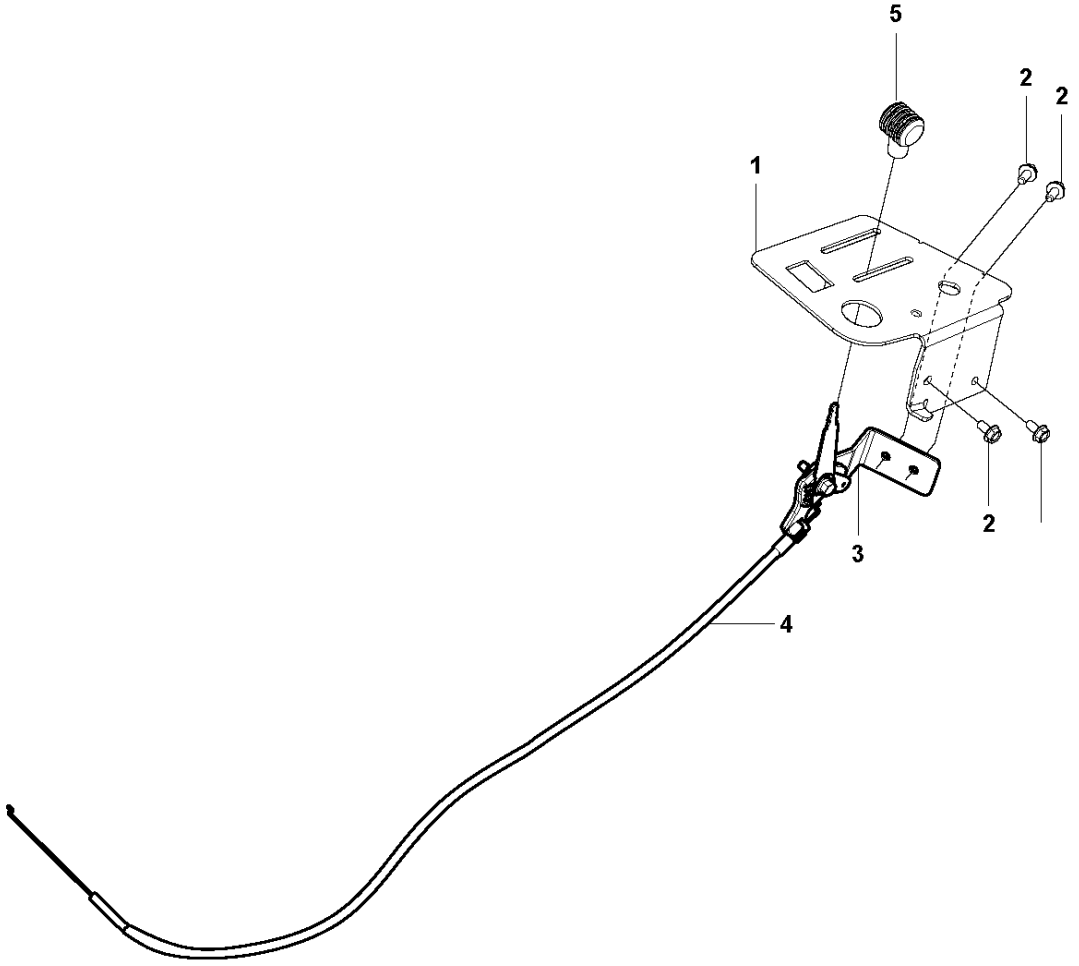

For 967325901

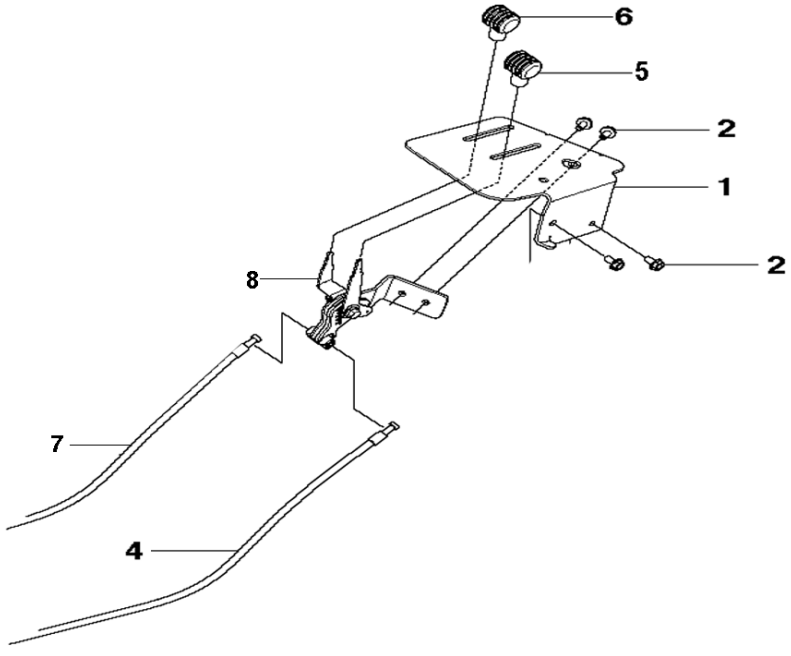

5HI	3DUW	'HVFULSWLRQ	5HPDUN	47<.,7
		6833257		
		6&5(:(++)0		
		7+5277/&21752$66<		
		:,5(		
		.12%		
		.12%	)RU	
		:,5(	)RU	
		7+5277/&21752/	)RU	

ENGINE

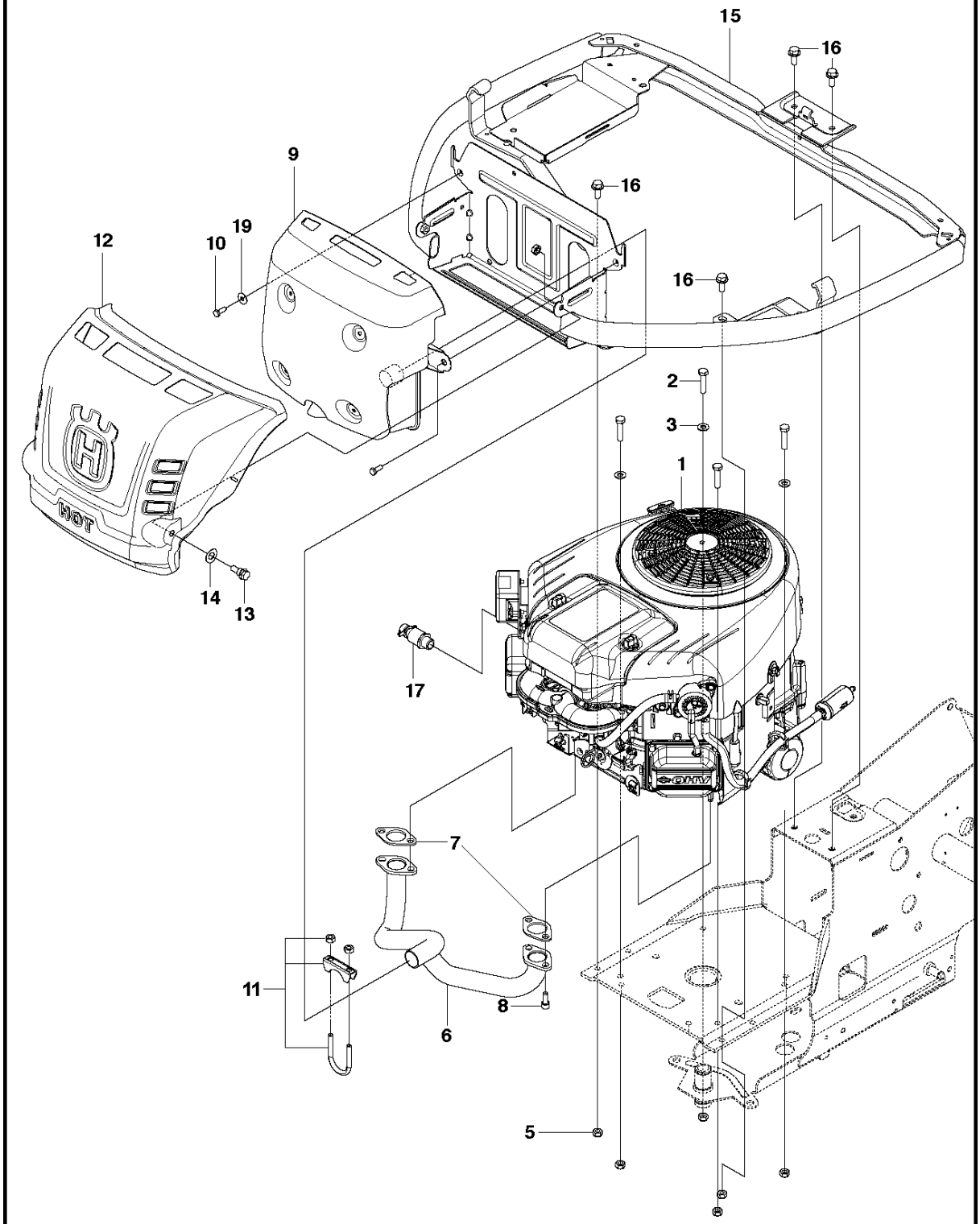

5HI	3DUW	'HVFULSWLRQ	5HPDUN	47<.,7
		(1*,1(	)RU	
		(1*,1(	)RU	
		6&5(:	)RU	
		678'6&5(:	)RU	
		:$6+(5		
		/2&.187		
		0$1,)2/'	)RU	
		0$1,)2/'	)RU	
		*$6.(7	)RU	
		6&5(:81&	)RU	
		08))/(5	)RU	
		08))/(5	)RU	
		6&5(:(++)7		
		&/$03$66<		
		+($76+,(/'		
		6&5(:(++)0		
		635,1*:$6+(5		
		(1*,1()5$0(		
		6&5(:(++)0		
		3/8*		
		:$6+(5	)RU	

FUEL SYSTEM

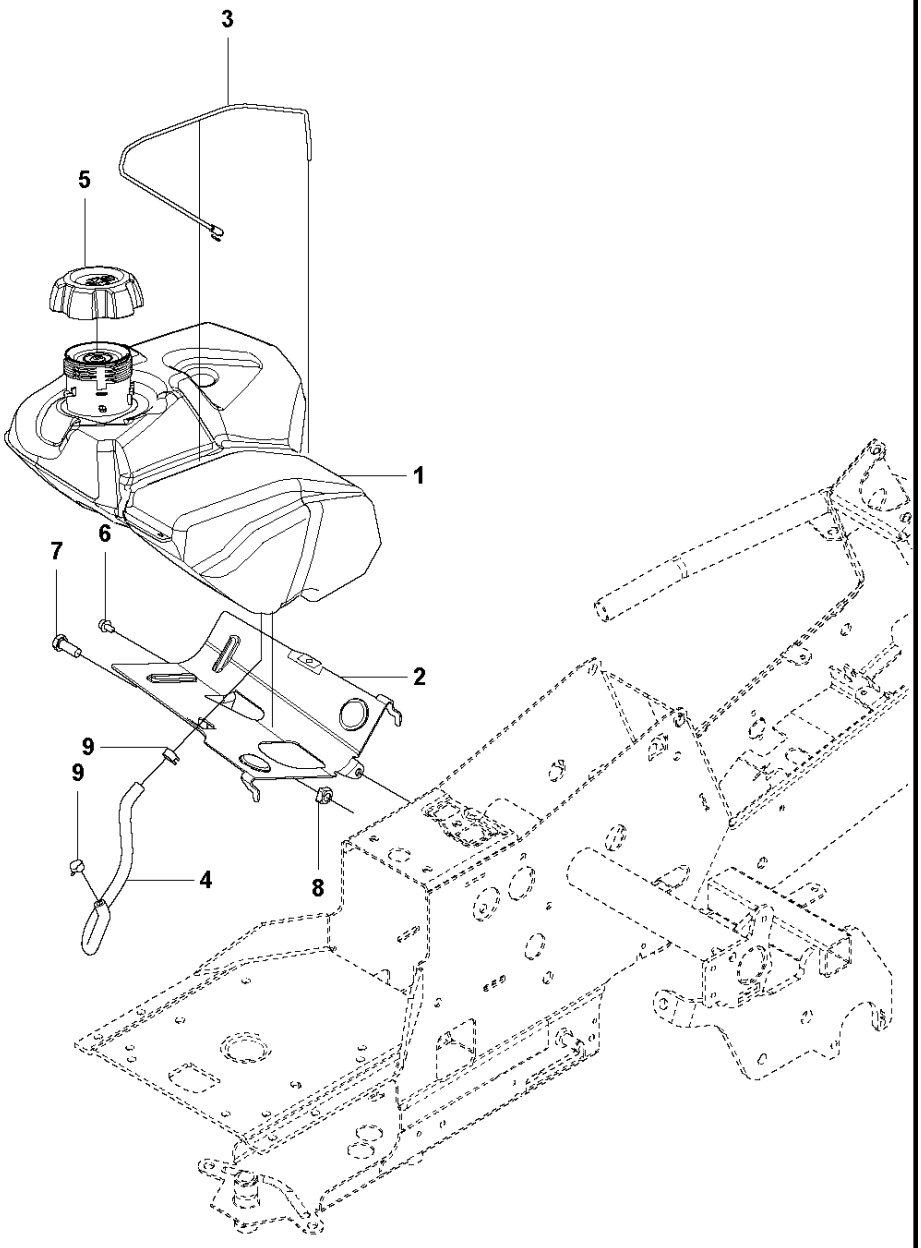

5HI	3DUW	'HVFULSWLRQ	5HPDUN	47<.,7
		)8(/7$1.		
		%5$&.(7		
		:,5(		
		)8(/+26(		
		)8(/&$3		
		6&5(:(++)7		
		6&5(:(++0		
		/2&.187		
		+26(%5$&(		

ELECTRICAL

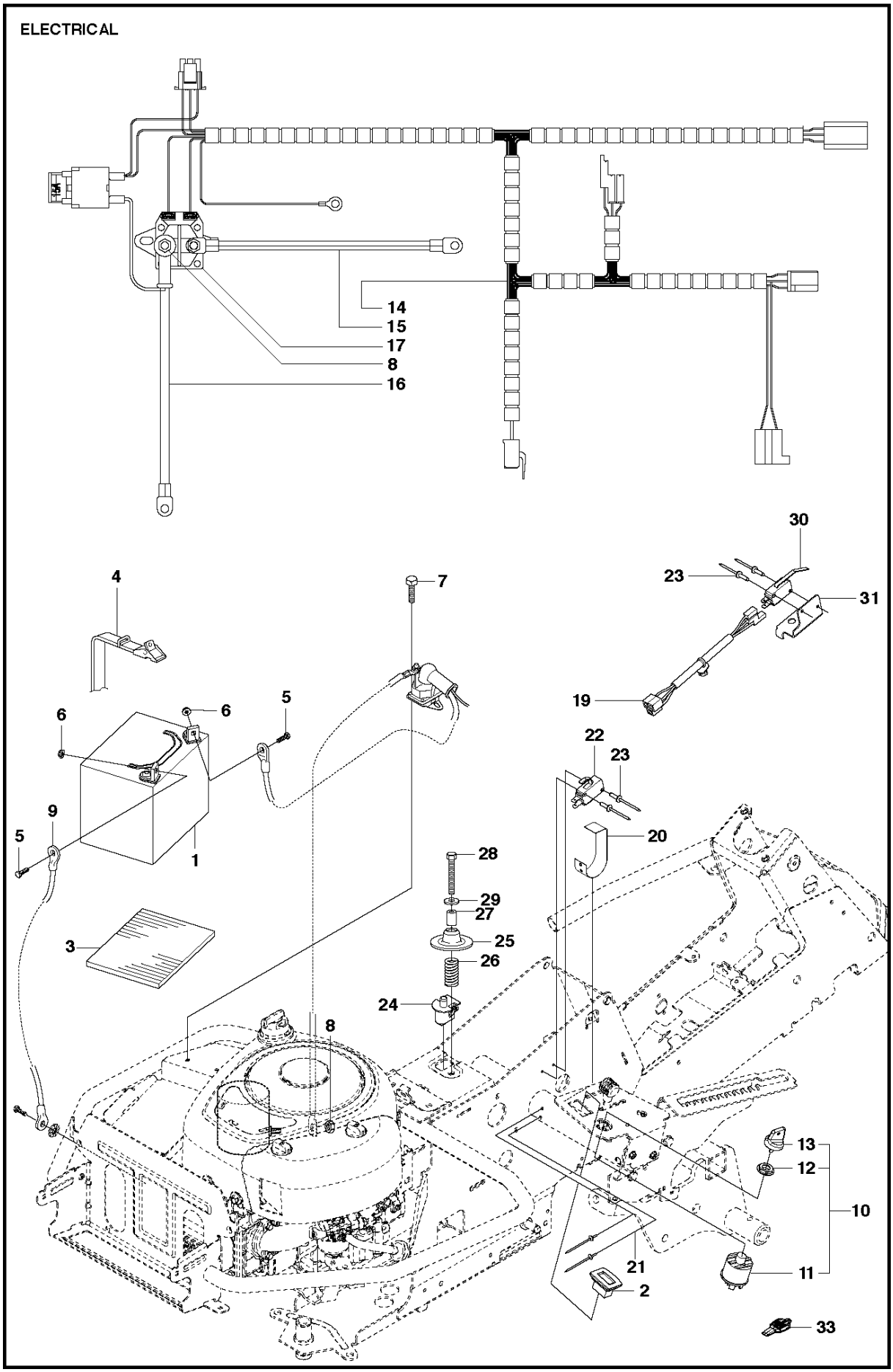
14
15
17
8
16
4
7
30
23
31
19
6
6
5
22
23
9
5
1
20
28
29
27
25
3
26
24
8
13
12
10
21
11
2
33

5HI	3DUW	'HVFULSWLRQ	5HPDUN	47<.,7
		%$77(5<		
		+2850(7(5		
		%$77(50<$7	)RU	
		%(/7		
		6&5(:(++0		
		187		
		6&5(:(++)7		
		187		
		&$%/(		
		,*1,7,26:,7&+		
		,*1,7,26:,7&+		
		187		
		,*1,7,2.1(<		
		:,5,1*		
		&$%/(		
		:,5(		
		5(/$<		
		:,5,1*		
		3/$7(635,1*	)RU	
		%/,1'5,9(7	)RU	
		6:,7&+	)RU	
		6:,7&+	)RU	
		5,9(7		
		6:,7&+		
		635,1*:$6+(5		
		635,1*		
		63$&,17%(	)RU	
		6&5(:(++0	)RU	
		6&5(:(++0	)RU	
		:$6+(5		
		6:,7&+		
		%5$&.(7		
		/(9(5		

COVER – 1

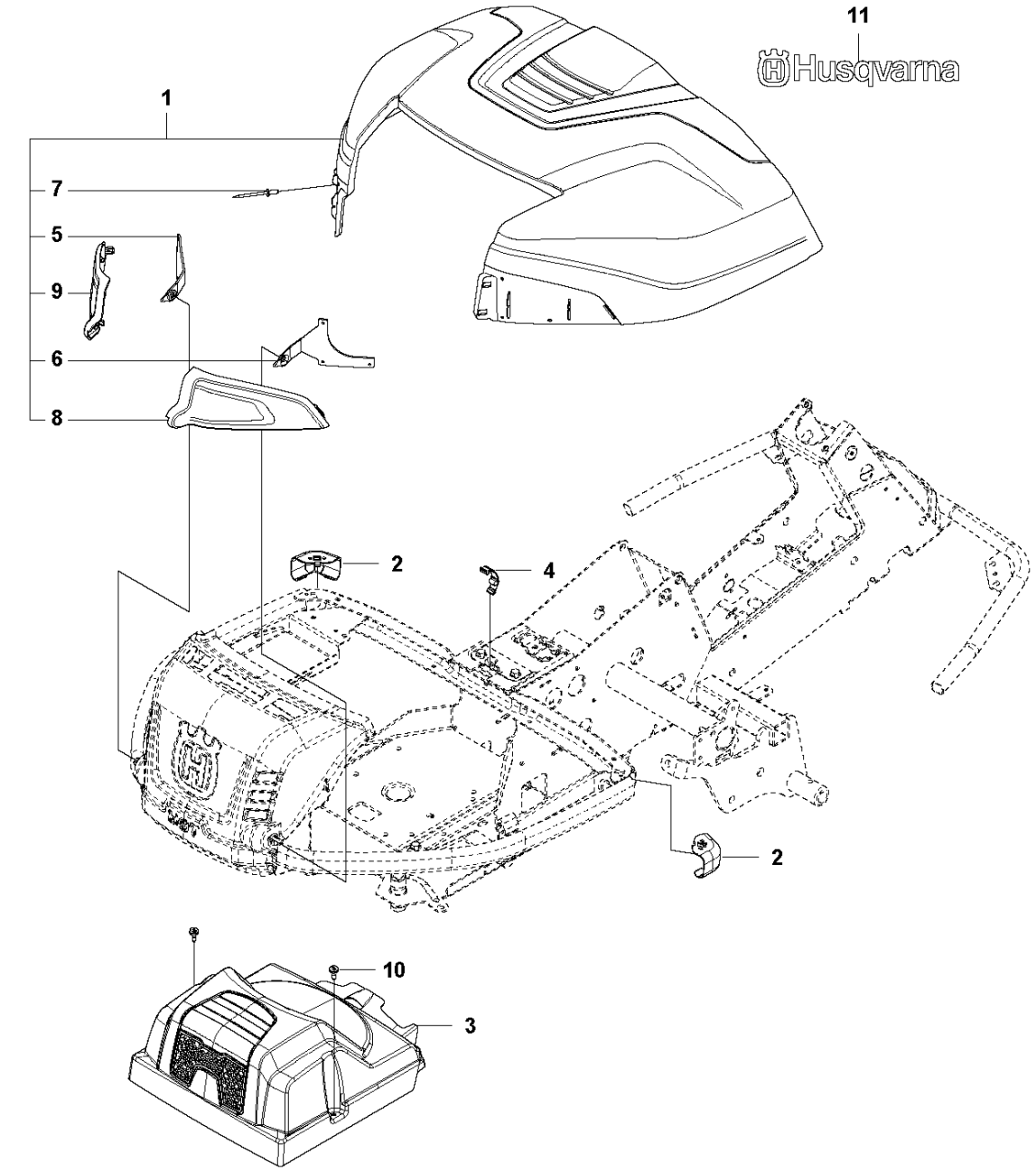

5HI	3DUW	'HVFULSWLRQ	5HPDUN	47<.,7
		(1*,1(+22'$66<		
		3/8*		
		75$160,66,21 29(5		
		61$3/2&.,1*	)RU	
		61$3/2&.,1*	)RU	
		+,1*(		
		+,1*(		
		5,9(7		
		&29(5		
		&29(5		
		6&5(:		
		'(&$/		

COVER – 2

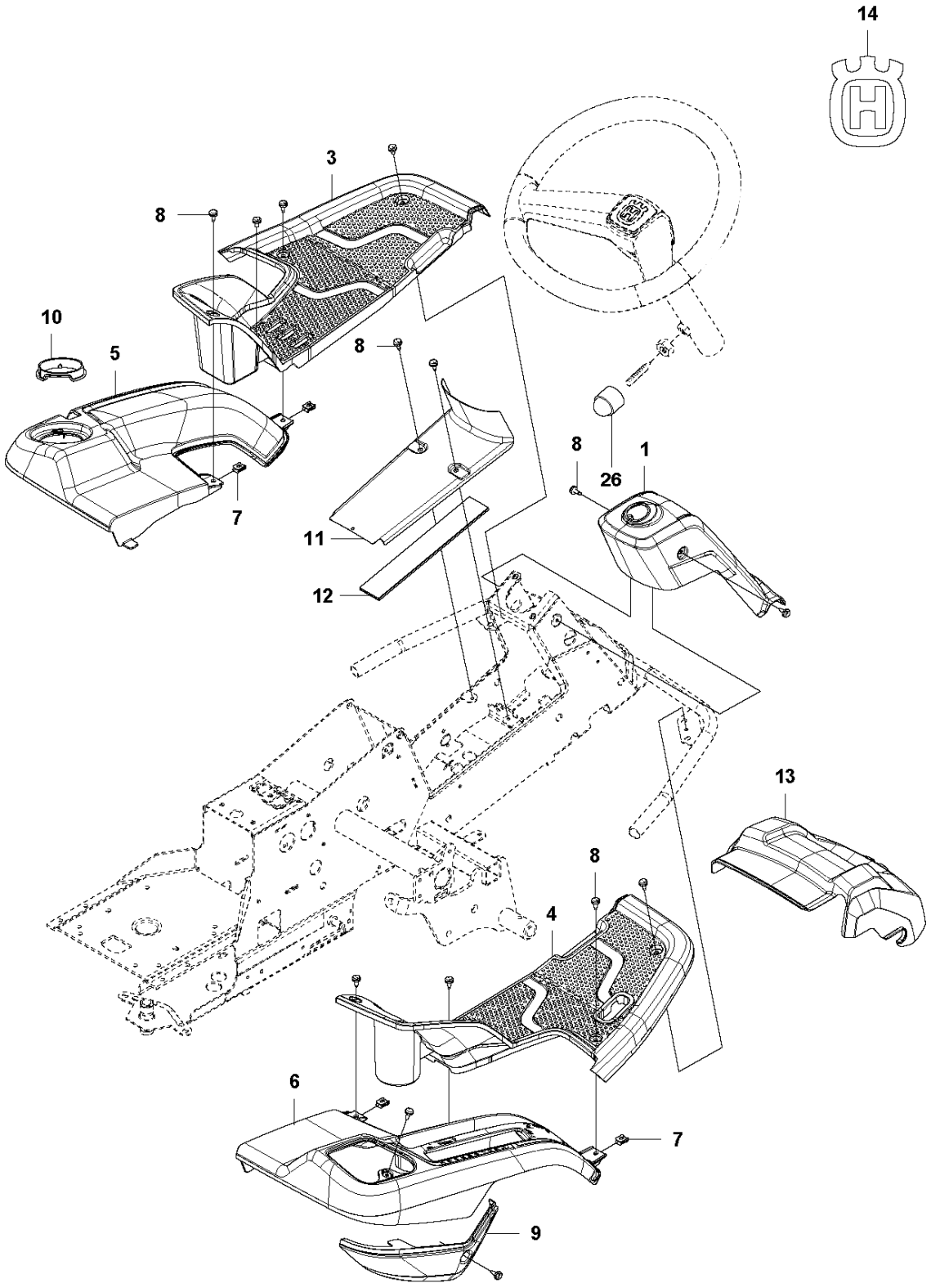

5HI	3DUW	'HVFULSWLRQ	5HPDUN	47<.,7
		&29(5		
		)2273/$7(		
		)2273/$7(		
		)(1'(5		
		)(1'(5		
		635,1*187		
		6&5(:		
		&21752&29(5		
		/2&.187		
		&29(5		
		0$7		
		81,7&29(5		
		'(&$/		
		3527(&7,9(29(5	)RU	

COVER – 3

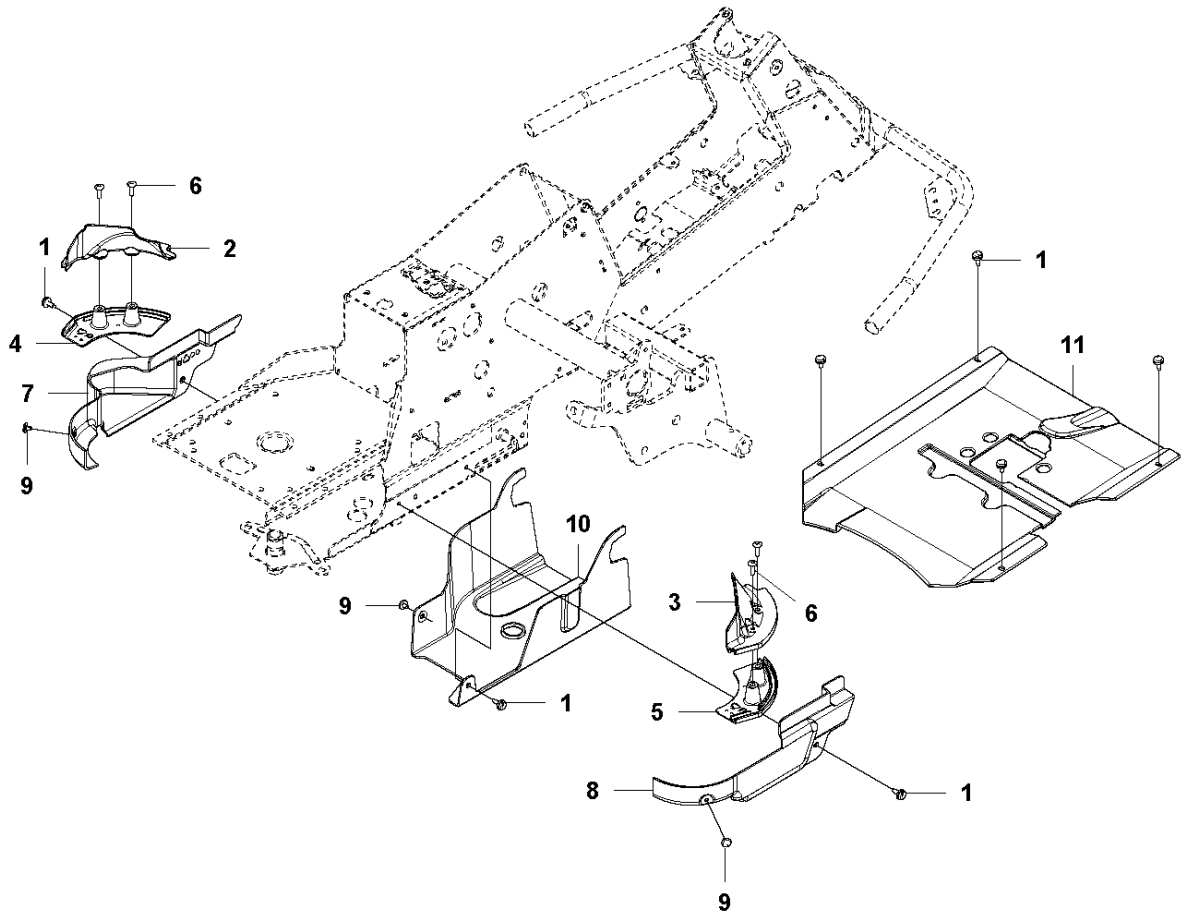

5HI	3DUW	'HVFULSWLRQ	5HPDUN	47<.,7
		6&5(:		
		%(/7&29(5		
		%(/7&29(5		
		%(/7&29(5		
		%(/7&29(5		
		6&5(:,+3$10	)RU	
		6&5(:(++)7	)RU	
		%(/7&29(5		
		%(/7&29(5		
		6&5(:	)RU	
		6&5(:(++)7	)RU	
		%(/7&29(5		
		%(/7&29(5		

SEAT

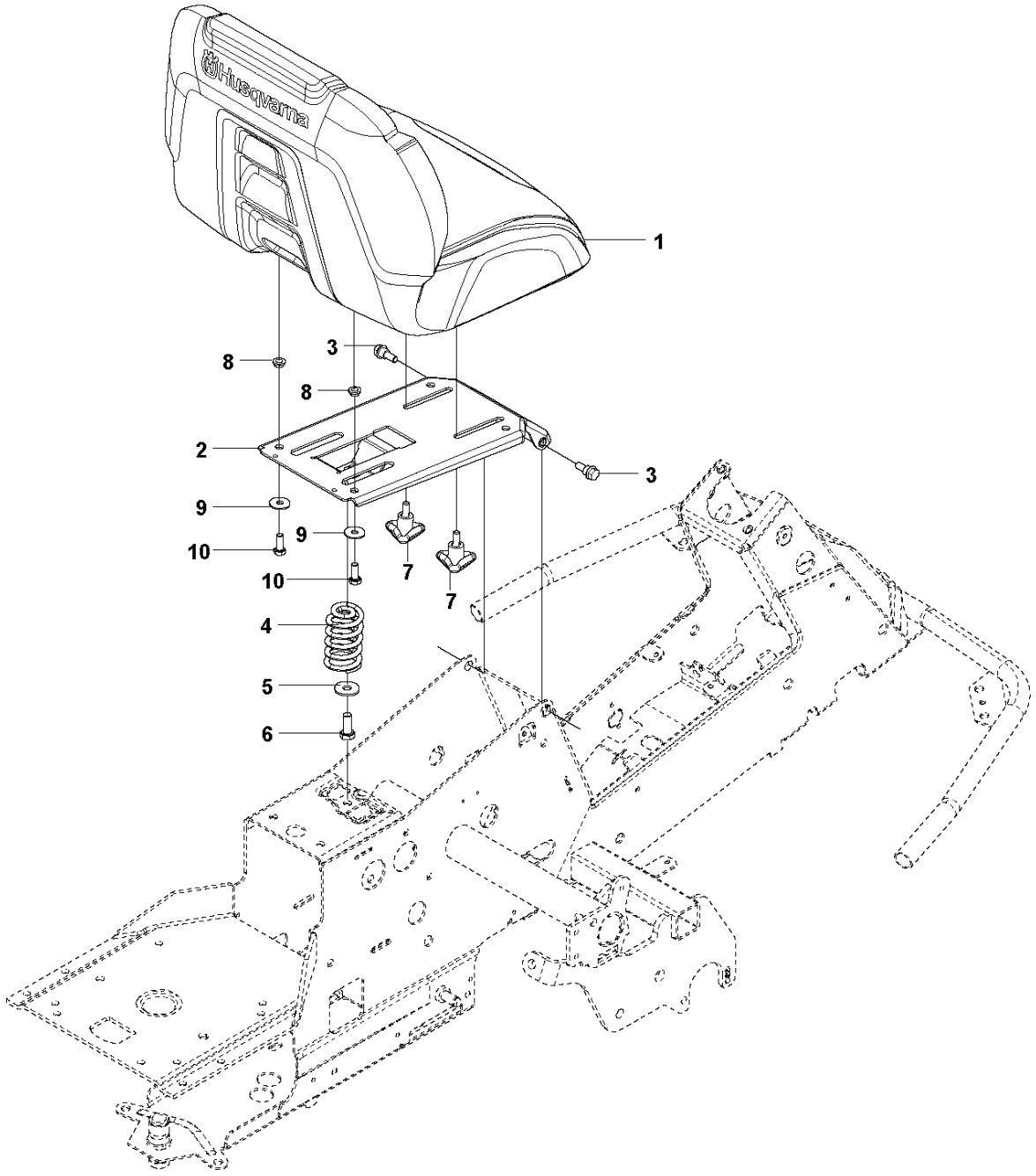

5HI	3DUW	'HVFULSWLRQ	5HPDUN	47<.,7
		6($7	6HDWQHZRGHO\ !	
		6($7$66<	6HDNLWRPRGHO\ EHWZHHQ %	
		6($7%5$.($66<		
		6&5(:(++)0		
		&2035(66,2135,1*		
		:$6+(5		
		6&5(:(++0		
		.12%		
		%86+,1*		
		:$6+(5		
		6&5(:(++0		

WHEELS & TIRES

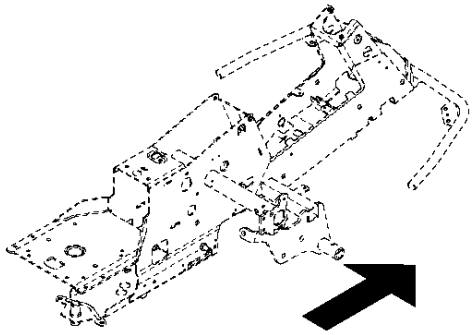

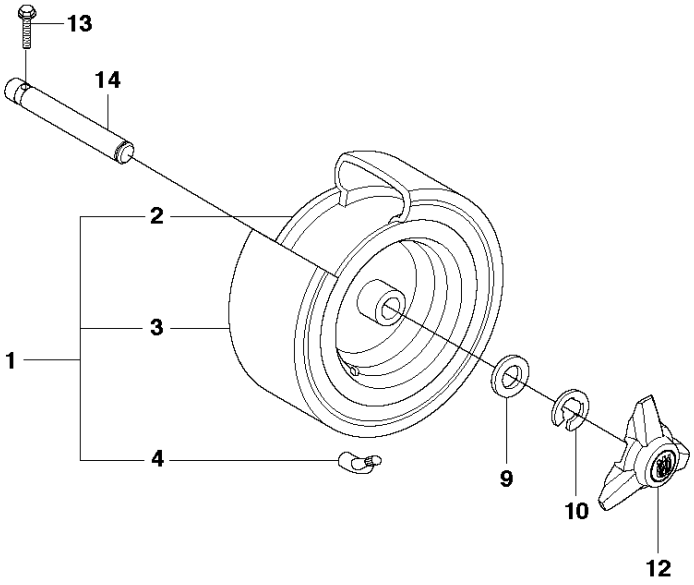

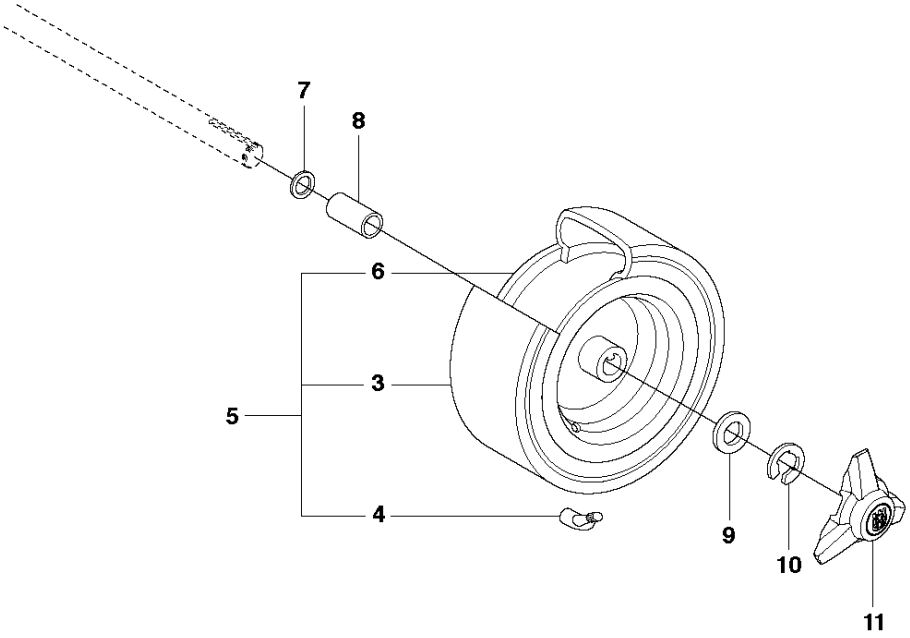

5HI	3DUW	'HVFULSWLRQ	5HPDUN	47<.,7
		:+((/		
		5,0		
		7,5(		
		9$/9(		
		7<5(		
		5,0		
		:$6+(5		
		63$&,16/((9(		
		:$6+(5		
		(&/,3		
		+8%&$3		
		+8%&$3		
		6&5(:(++)7		
		:+(($;/(		

ATTACHMENTS

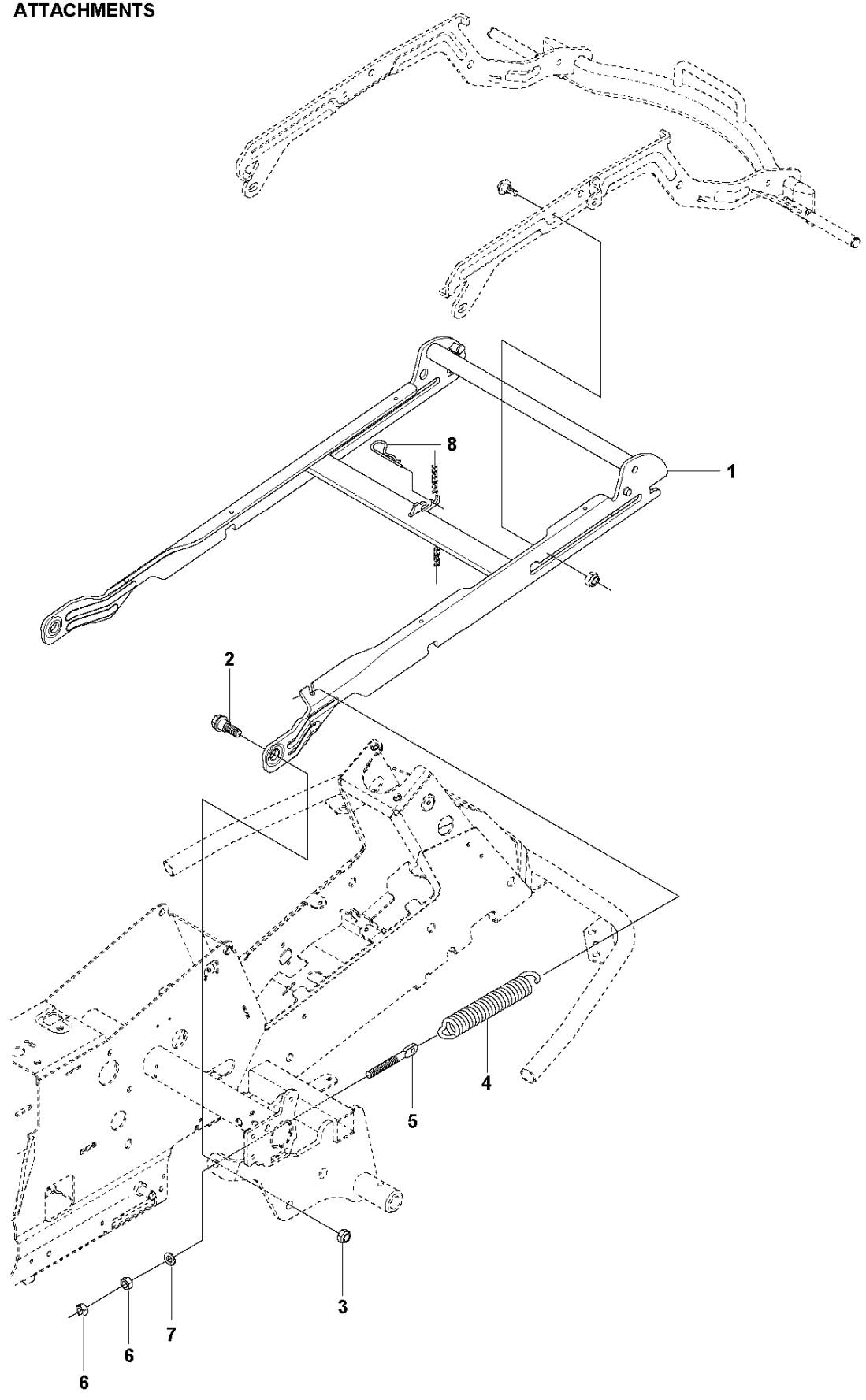

5HI	3DUW	'HVFULSWLRQ	5HPDUN	47<.,7
		(48,30(17)5$0(		
		&2//$56&5(:		
		+(;$*21/2&.,1*187		
		635,1*		
		5,1*%2/7		
		+(;$*21187		
		:$6+(5		
		635,1*&277(5		

DECALS

1

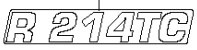

2

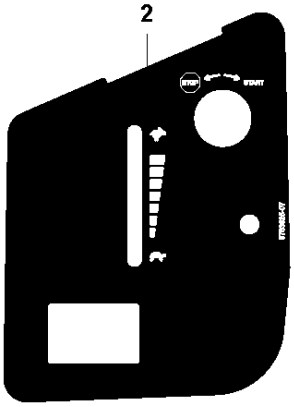

3

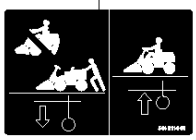

4

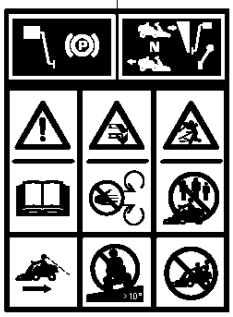

5

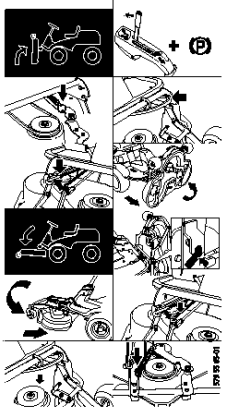

6



9



8



7



5HI	3DUW	'HVFULSWLRQ	5HPDUN	47<.,7
		'(&$/		
		'(&$/		
		/$%(/		
		/$%(/		
		'(&$/		
		'(&$/	)RU	
		'(&$/		
		'(&$/		
		'(&$/	)RU	

E MOWER LIFT
For 2012 - 2017

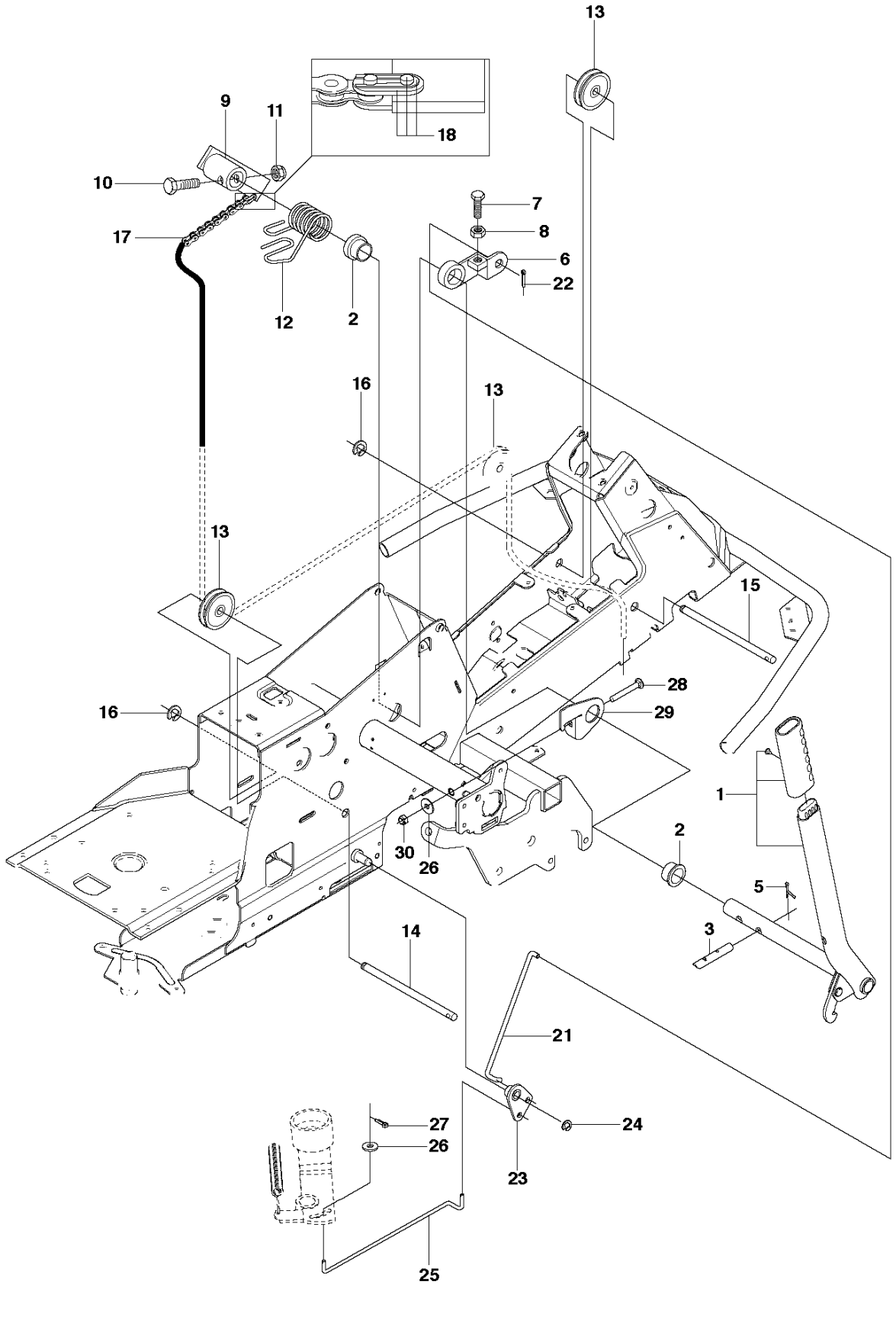

Image name: R320 AWD 544424701-K

5HI	3DUW	'HVFULSWLRQ	5HPDUN	47<.,7
		/,)7,1*(9(5$66<		
		%($5,1*		
		3(1		
		63/,&,1		
		/,1.$66<		
		6&5(:		
		+(;$*21187		
		/,)7,1*$50		
		6&5(:(++0		
		+(;$*21/2&.,1*187		
		635,1*		
		2))6(738//(<		
		6+$)7		
		6+$)7		
		(&/,3		
		&+$,1		
		/,1.$*(		
		&211(&7,2512'		
		63/,&,1		
		/,1.		
		(&/,3		
		&211(&7,2512'		
		:$6+(5		
		63/,&,1		
		6&5(:5640		
		6+((7		
		/2&.187		

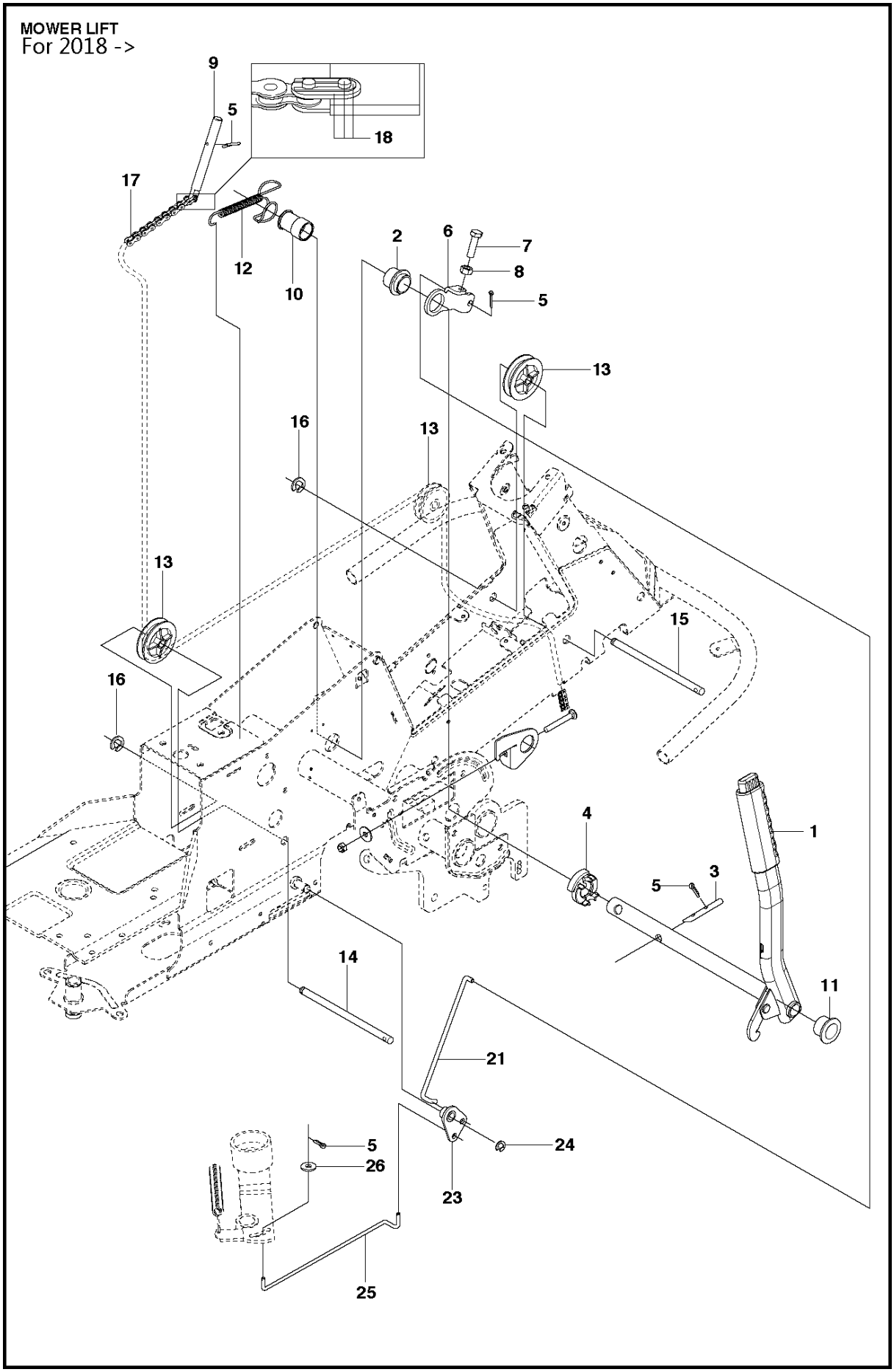
MOWER LIFT
For 2018 ->
9
5
18
17
12
10
2
6
7
8
5
13
16
13
13
16
15
4
1
5
3
14
11
21
5
26
24
23
25

5HI	3DUW	'HVFULSWLRQ	5HPDUN	47<.,7
		/,)7,1*(9(5$66<		
		%($5,1*		
		3(1		
		$19,/		
		63/,73,1		
		/,)7,1*$50		
		6&5(:		
		+(;$*21187		
		52'		
		$19,/		
		%($5,1*		
		635,1*		
		2))6(738//(<		
		6+$)7		
		6+$)7		
		(&/,3		
		&+$,1		
		/,1.$*(		
		&211(&7,252'		
		/,1.		
		(&/,3		
		&211(&7,252'		
		:$6+(5		
		:$6+(5		

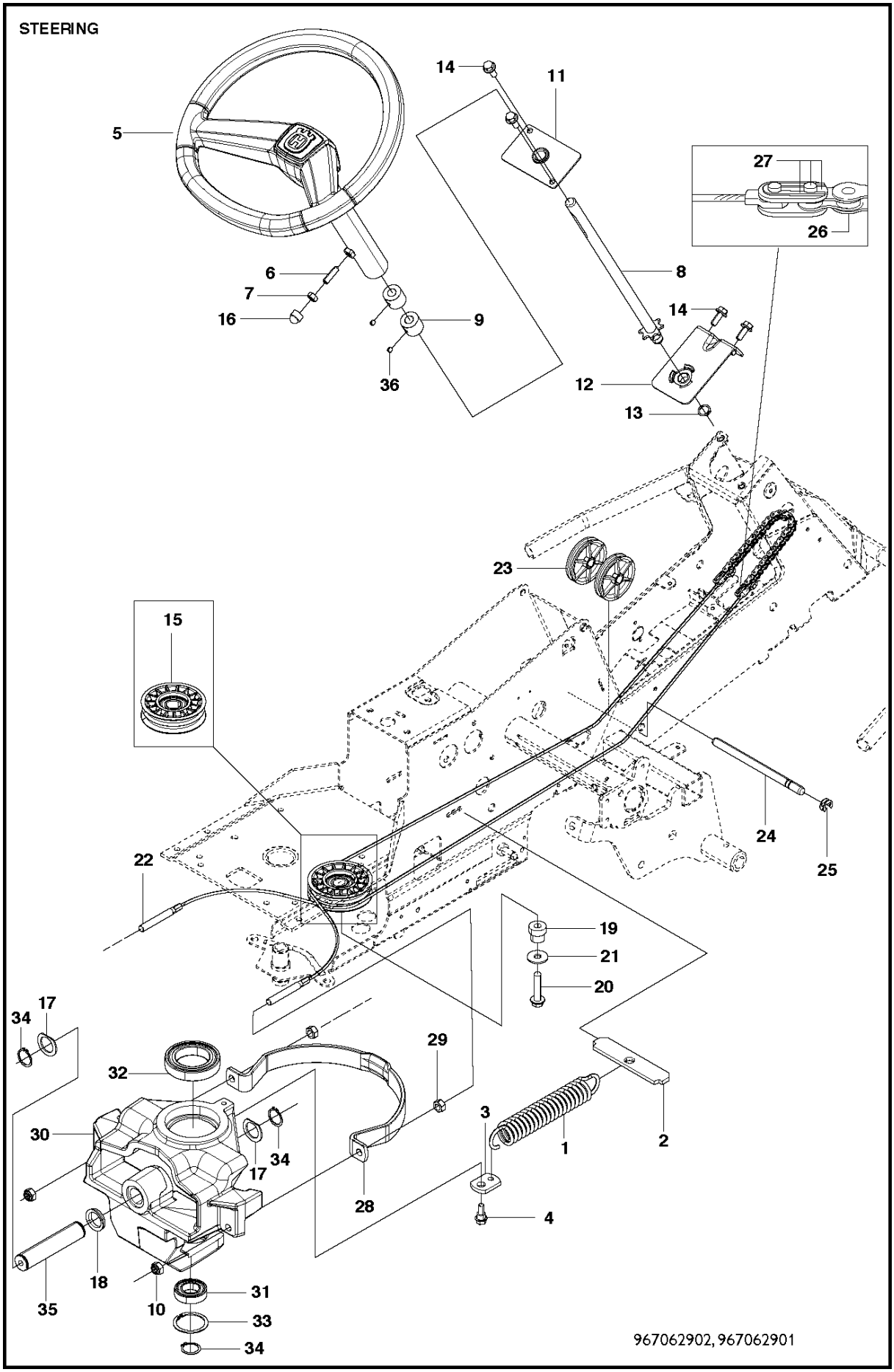
STEERING
5
14
11
27
26
6
7
16
9
8
14
36
12
13
23
15
24
25
22
19
21
20
34
17
29
32
30
17
34
28
3
1
2
4
18
35
10
31
33
34
967062902, 967062901

5HI	3DUW	'HVFULSWLRQ	5HPDUN	47<.,7
		635,1*		
		635,15(7$,1(5		
		/,1.		
		6&5(:(++)0		
		67((5,1*:+((/		
		6&5(:,+6(70		
		+(;$*21187		
		67((5,1*52'		
		'5,9(5		
		187		
		%5$&.(7		
		%5$&.(7		
		&,5&/,3		
		6&5(:(++)0		
		38//(<		
		3527(&7,9(29(5		
		:$6+(5		
		95,1*		
		%86+,1*		
		6&5(:(++)0		
		:$6+(5		
		:,5($66<		
		67$57(538//(<		
		6+$)7		
		(&/,3		
		&+$,1		
		/,1.$*(		
		:,5(*8,'(		
		+(;$*21187		
		63,1'/(		
		%$/%($5,1*		
		%$/%($5,1*		
		&,5&/,3		
		&,5&/,3		
		6:,1*$;/(		
		6&5(:,+6(70		

STEERING

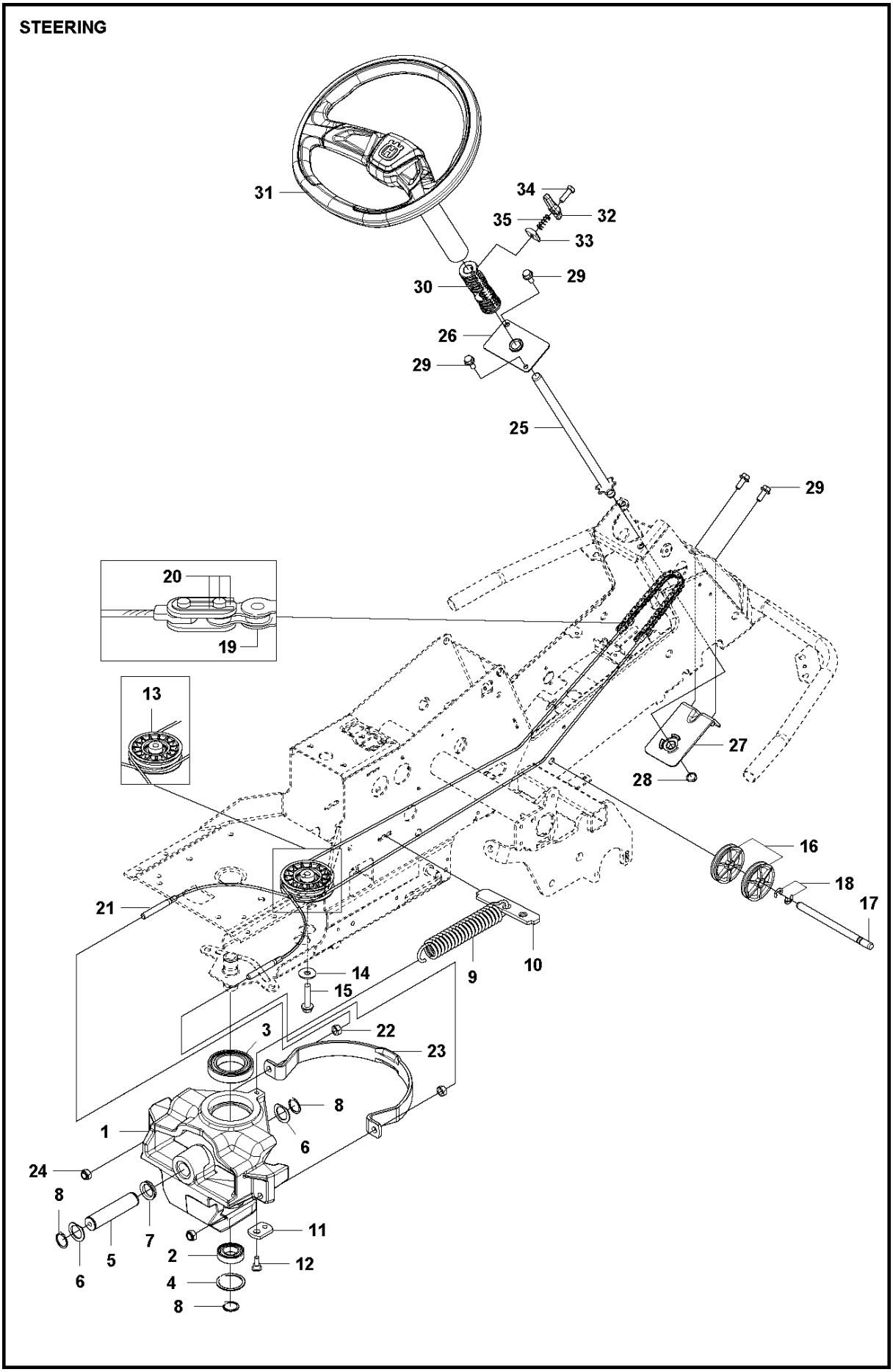
31
34
35
32
33
30
29
26
29
25
29
20
19
13
27
28
16
18
17
21
14
15
9
10
3
22
23
8
1
6
24
8
7
5
6
11
2
12
4
8

5HI	3DUW	'HVFULSWLRQ	5HPDUN	47<.,7
		63,1'/(		
		%$/%($5,1*		
		%$/%($5,1*		
		&,5&/,3		
		6:,1*$;/(		
		:$6+(5		
		95,1*		
		&,5&/,3		
		635,1*		
		635,1*5(7$,1(5		
		/,1.		
		6&5(:(++)0		
		38//(<		
		:$6+(5		
		6&5(:(++)0		
		67$57(538//(<		
		6+$)7		
		(&/,3		
		&+$,1		
		/,1.$*(		
		&$%/$66<		
		+(;$*211187		
		:,5(*8,'(		
		187		
		67((5,1*52'		
		%5$&.(7		
		%5$&.(7		
		&,5&/,3		
		6&5(:(++)0		
		'5,9(5		
		67((5,1*:+((/		
		+$1'/(		
		),;,1*3/$7(		
		3,1		
		635,1*		

CUTTING DECK C94 – 1

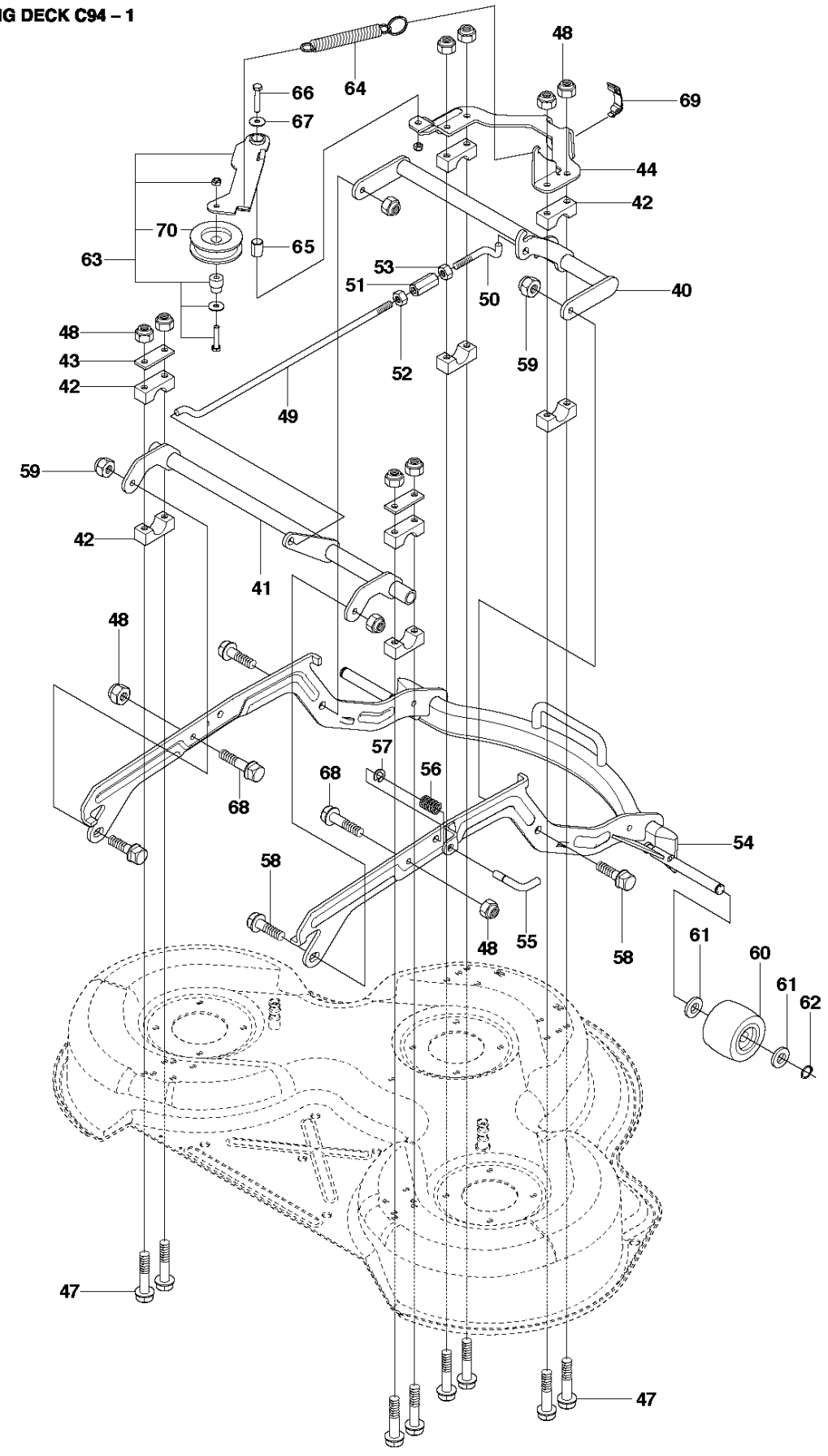

5HI	3DUW	'HVFULSWLRQ	5HPDUN	47<.,7
		&5266%$5		
		&5266%$5		
		%($5,1*		
		5(,1)25&,13/$7(		
		%5$&.(7		
		6&5(:(++0		
		/2&.187		
		3$5$//(/52'		
		3$5$//(/52'		
		$'-8670(17252'		
		187		
		+(;$*21187		
		'(&.77&+0(17		
		/2&.,1*3,1		
		635,1*		
		(&/,3		
		6&5(:(++)0		
		/2&.187		
		:+((/ $66<		
		:$6+(5		
		&,5&/,3		
		%(/77(16,21($66<	)RU	
		%(/77(16,21($66<	)RU	
		635,1*		
		3,3(		
		6&5(:(++0		
		:$6+(5		
		6&5(:		
		61$3/2&.,1*	)RU	
		61$3/2&.,1*	)RU	
		38//(<		

CUTTING DECK C94 – 2

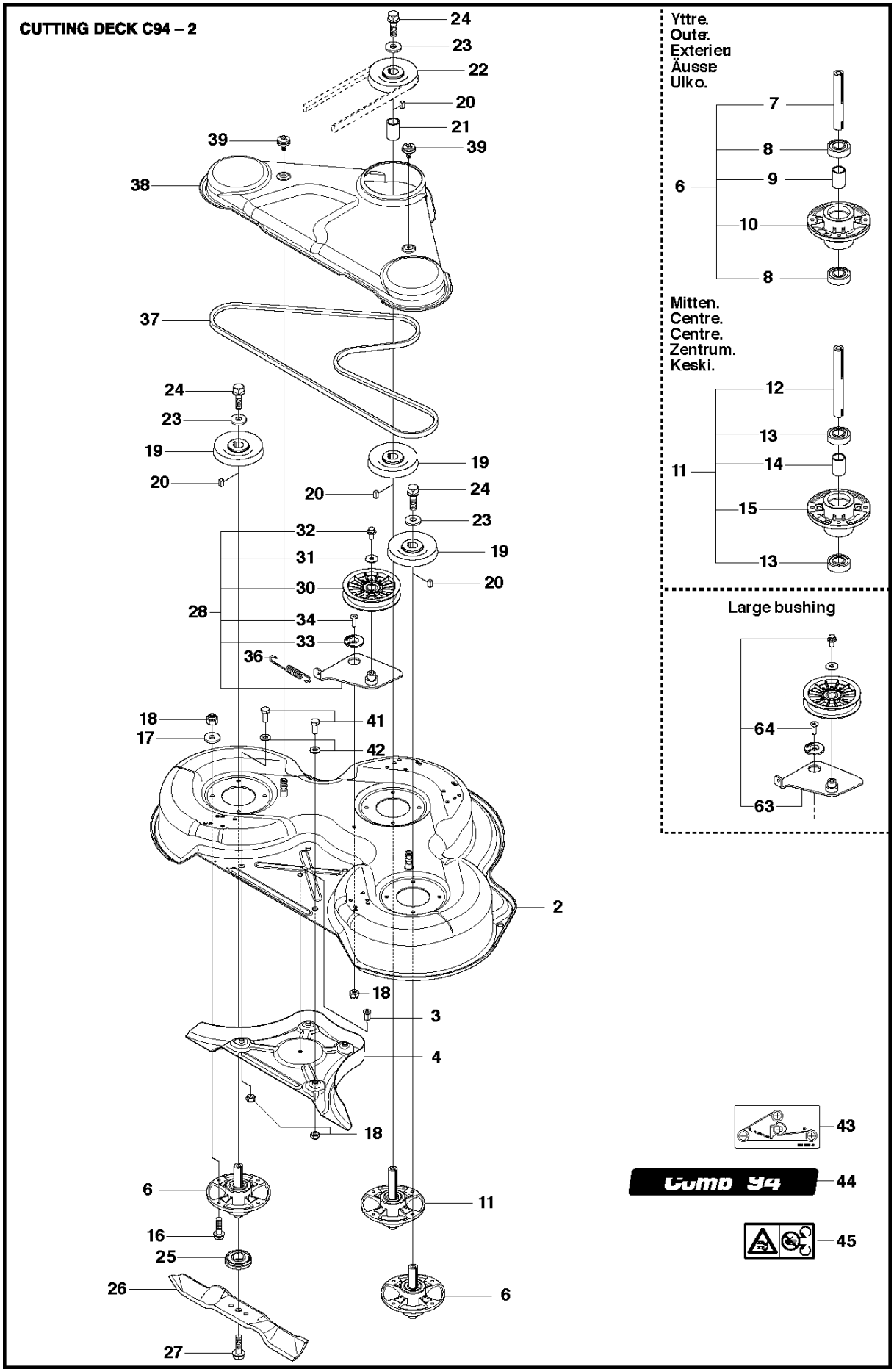

5HI	3DUW	'HVFULSWLRQ	5HPDUN	47<.,7
		'(&. 6+(//$66<		
		187		
		3/8*		
		%/$'(+286,1*$66<		
		6+$)7		
		%$/%(5,1*		
		63$&,1*/((9(		
		%(5,1*286,1*		
		%/$'(+286,1*$66<		
		6+$)7		
		%$/%(5,1*		
		63$&,1*/((9(		
		%(5,1*286,1*		
		6&5(:5640		
		:$6+(5		
		/2&.187		
		38//(<		
		3$5$//(/.(<		
		63$&,1*/((9(		
		38//(<		
		:$6+(5		
		6&5(:(++)0		
		%/$'(+2/'(5		
		%/$'(		
		6&5(:(++)0		
		%(/77(16,21($66<		
		%(/77(16,21(5+((/		
		:$6+(5		
		6&5(:(++)7		
		:$6+(5		
		6&5(:,+&6)0		
		635,1*		
		%(/7		
		%(/7&29(5		
		6&5(:		
		6&5(:(++0		
		:$6+(5		
		/$%(/		
		/$%(/		
		'(&$/		
		63b11$503/	)RU	
		6&5(:(++0	)RU	