COBRA

MODELS: **Fortis 14L, 17B, 20B, 25B**

(RMC14, 17, 20, 25)

COBRA LAWN MOWER OWNER'S MANUAL



CE

Cobra Garden Machinery

Henton and Chattell Ltd., London Road, Nottingham NG2 3HW UK

www.cobragarden.co.uk

 **WARNING:**

For your own safety please read this manual before attempting to operate your new unit. Failure to follow instructions can result in serious personal injury. Spend a few moments to familiarise yourself with your mower before each use. Keep this manual in a safe place, so that the information is available at all times. If you give the equipment to any other person, hand over these operating instructions and safety regulations as well.

Intended use:

The equipment may only be used for the tasks it is designed to handle. Any other use is deemed to be a case of misuse. The user/operator and not the manufacturer will be liable for any damage or injuries of any kind caused as a result of this.

The petrol lawn mower is intended for use in home gardening as well as fine turf sports field environments.

The operating instructions as supplied by the manufacturer must be kept and referred to in order to ensure that the lawn mower is properly used and maintained. The instructions contain valuable information on operating, maintenance and servicing conditions.

Important! Due to the high risk of bodily injury to the user, the lawn mower may not be used to trim bushes, hedges or shrubs, to cut scaling vegetation, planted roofs, or balcony-grown grass, to clean (suck up) dirt and debris off walkways, or to chop up tree or hedge clippings. Moreover, the lawn mower may not be used as a power cultivator to level out high areas such as molehills.

For safety reasons, the lawn mower may not be used as a drive unit for other work tools or toolkits of any kind.

CONTENTS

SECTION 1 SYMBOLS MARKED ON THE PRODUCT……4

SECTION 2 GENERAL SAFETY RULES…… 5

SECTION 3 PARTS DESCRIPTION…….…….. 9

SECTION 4 ASSEMBLY……..…
10

SECTION 5 PREPARING FOR USE……...
10

SECTION 6 OPERATION INSTRUCTIONS…….…. 11

SECTION 7 SAFETY CHECKS, SERVICE & MAINTENANCE……..…….
24

SECTION 8 CHANGING THE CARTRIDGE CASSETTE..……..…
24

SECTION 9 FAULT DIAGNOSIS & REMEDY……...
26

SECTION 10 TECHNICAL DATA…….…….
26

SECTION 11 WARRANTY……..…
27

SECTION 12 EC-DECLARATION OF CONFORMITY……28

1.SYMBOLS MARKED ON THE PRODUCT

WARNING:

For your own safety please read this manual before attempting to operate your new mower. Failure to follow instructions can result in serious personal injury. Spend a few moments to familiarise yourself with your mower before each use.

Symbols and Warnings



Read the instruction handbook and follow all warning and safety instructions.
Before any use, refer to the corresponding paragraph in the present manual.



Warning: Safety information about hazards that can result in personal injury.





Danger or injury from flying parts! Never point the discharge chute towards bystanders. Always maintain a sufficiently safe distance. Be careful to prevent debris, such as stones or twigs being thrown from the mower.



Stop the engine and remove the spark plug wire before assembly, maintenance and unblocking debris.



Do not use on hills above 22° .



Stop the engine before cleaning of work area.



Warning: The blade is sharp, do not touch the blade.





Do not place hands or feet into the cutting unit. Do not touch rotating parts.



Warning: Always use correct tools and original spare parts.



KEEP HANDS AND FEET AWAY.

WARNING:

Keep the safety signs clear and visible on the equipment. Replace the safety signs if they are missing or illegible.

2. GENERAL SAFETY RULES

WARNING: When using petrol tools, basic safety precautions, including the following, should always be followed to reduce the risk of serious personal injury and/or damage to the unit. Read all these instruction before operating this product and retain these instructions for future reference.

WARNING: This machine produces an electromagnetic field during operation. This field may under some circumstances interfere with active or passive medical implants. To reduce the risk of serious or fatal injury, we recommend persons with medical implants to consult their physician and the medical implant manufacturer before operating this machine.

Training

1. Before using the lawnmower read the instructions carefully. Familiarise yourself with the controls and pay particular attention in learning how to stop the machine in an emergency.
2. Never allow children or people unfamiliar with these instructions to use the lawn mower. Local regulations can restrict the age of the operator.
3. Never mow while people, especially children or pets are nearby.
4. Never use the mower if the operator is taking medicine or substances that could affect or impair his ability to react or concentrate.
5. Keep in mind that the operator or user is responsible for accidents or hazards occurring to other people or their property.
6. The operators must receive proper training in the use, adjustment and operation of the machine, including prohibited operations.

Before you start

1. While mowing, always wear substantial footwear and long trousers. Do not operate the equipment when barefoot or wearing open toed sandals.
2. Thoroughly inspect the area where the equipment is to be used and remove all objects, such as stones, toys, sticks and wires, which can damage or be thrown by the machine.
3. WARNING - Petrol is highly flammable.

- Store fuel in containers specifically designed for this purpose.
- Refuel outdoors only and do not smoke while refuelling; add fuel before starting the engine.
- Never remove the cap of the fuel tank or add petrol while the engine is running or when

the engine is hot.

- If petrol is spilled, do not attempt to start the engine, but move the machine away from the area of spillage and avoid creating any source of ignition until petrol vapours have dissipated.
- Replace all fuel tank and container caps securely.

4. Replace faulty silencers.
5. Before using, always visually inspect to see that the blade, blade bolts and cutter assembly are not worn or damaged. Replace worn or damaged blades and bolts in sets to preserve balance.

Operation and Caution

1. Do not operate the engine in a confined space where dangerous carbon monoxide fumes can collect, refuel outdoors only.
2. Mow only in daylight or in good artificial light.
3. Avoid operating the equipment in wet grass, where feasible.
4. Always be sure of your footing on slopes.
5. Walk, never run, always be in control of the lawnmower and never allow yourself to be pulled along.
6. For wheeled rotary machines, mow across the face of slopes, never up and down.
7. Exercise extreme caution when changing direction on slopes.
8. Do not mow excessively steep slopes of more 20°
9. Use extreme caution when reversing or pulling the lawn mower towards you.
10. Stop the blade if the lawn mower has to be tilted for transportation when crossing surfaces other than grass, and when transporting the lawn mower to and from the area to be mowed
11. Never operate the lawn mower with defective guards, or without safety devices, for example deflectors and/or grass catchers, in place.
12. Do not change the engine governor settings or over speed the engine.
13. Before starting the engine disengage all blades and drive clutches.
14. Keep your feet well away from the blade when starting the engine and in accordance with the instructions.
15. Do not tilt the lawn mower when starting the engine and always start on a flat surface free from long grass.
16. Caution: The lawnmower shall not be operated without either the entire grass catcher or self-closing discharge opening guard in place.
17. Do not start the engine when standing in front of the discharge chute.
18. Never put hands or feet near or under rotating parts. Keep clear of the discharge opening at all times.
19. Always ensure the engine is fully switched off before picking up/carrying the Lawnmower.
20. Stop the engine and disconnect the spark plug wire, make sure that all moving parts have come to a complete stop and, where a key is fitted remove the key, make sure engine has had time to cool.

- Before unclogging chute and clearing blockages.

- Before checking, cleaning or working on the lawn mower.

- After striking a foreign object. Inspect the lawnmower for damage and make repairs before

restarting.

- If the lawn mower starts to vibrate abnormally (check immediately).

21. Stop the engine and disconnect the spark plug wire, make sure that all moving parts have come to a complete stop and, where a key is fitted remove the key, make sure engine is completely cooled.

- Whenever you leave the lawn mower.

- Before refueling.

22. Reduce the throttle setting during engine shut down and, if the engine is provided with a shut-off valve, turn the fuel valve off at the conclusion of mowing.

Maintenance and Storage

1. Keep all nuts, bolts and screws tight to be sure the equipment is in a safe working condition.

2. Never store the equipment with petrol in the tank inside a building where fuel vapours can reach an open flame or spark or where the temperature is high.

3. Before storage allow the engine to cool. When cooled, clean and undertake any maintenance.

4. To reduce the fire hazard, keep the engine, silencer, battery compartment and petrol storage area free of grass, leaves, or excessive grease.

5. Check the grass catcher and deflector frequently for wear or deterioration.

6. Replace worn or damaged parts for safety. Genuine parts should always be used as parts of inferior quality can damage the equipment and compromise safety.

7. If the fuel tank has to be drained, this should be done outdoors. Always ensure engine is completely cooled before starting this task.

8. If the blade needs to be removed, wear strong gloves to prevent injury to hands and fingers. Check the blades balance after sharpening.

9. When transporting the machine make sure you close the fuel cut off. Be careful to ensure weight is evenly distributed. Wear strong gloves.

10. When tilting the machine never tilt towards the air filter as this may become damaged with fuel.

11. Never crank the engine when the spark plug is removed.

12. Frequently check the fuel lines and fittings for damage and cracks, replace if necessary

13. Never start the engine with the air filter cover removed.

14. Carefully clean the mower and grass bag after use to remove debris as this can damage and corrode.

Fertilisers and top dressings are particularly corrosive.

15. In time your chassis may peel because of the abrasive action of the debris making contact. This can be remedied by touching up paintwork where necessary to prevent corrosion.

16. Improper maintenance, use of non-conforming replacement components, or the removal or modification of safety components can damage the lawnmower and injure the operators seriously.

17. Only use the recommended blades and spare parts by the manufacturer. The use of non-genuine parts can damage the machine and injure the operators. Keep the lawnmower in good working condition.

18. If the blade stopping device doesn't work, please contact service centre for help.

**Warning: Do not touch a rotating blade.**

**Warning: Refuel in a well-ventilated area with the engine stopped**.

3. PARTS DESCRIPTIONS

Notice: the illustrations may vary from your present model



1. Throttle lever
2. Upper handle
3. Drive clutch lever
4. Cylinder clutch lever
5. Lower handle
6. Release for handle
7. Fuel cap
8. Exhaust
9. Grass box collector
10. Front roller
11. Cutting cylinder
12. Height of cut control
13. Engine Switch

4. ASSEMBLY

Unpacking:

Remove the mower, fixings, tools and other items from the carton.

Warning: The mower is heavy. Take care when lifting and handling.

Warning: Ensure that cables are not pinched or damaged whilst removing from the package.

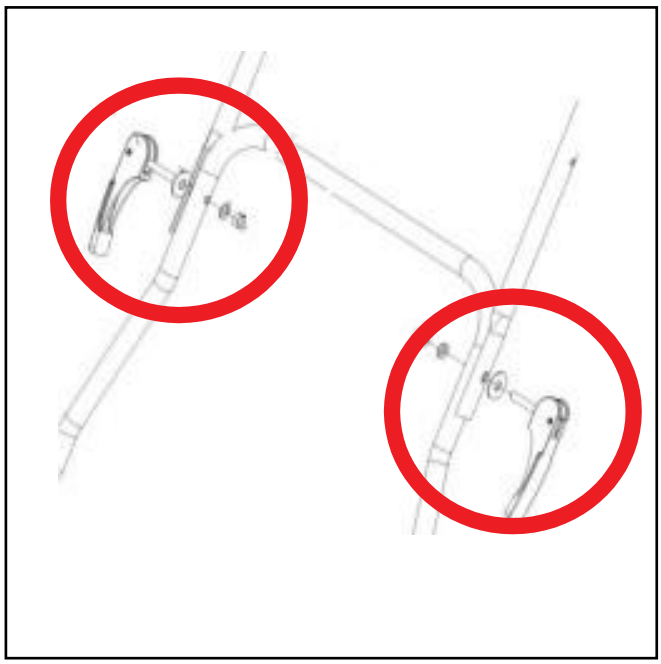

Assembly of handlebar:

1. Align the upper handle with the lower handle as shown.
2. Fit the quick release lever with one washer on the outside and the other on the inside of the handlebar. Fit the nut.
3. Tighten with a 13mm spanner.
4. Repeat for the other side.

Fitting the throttle cable:

Follow the steps below to install the throttle control cable to the engine.

1. Remove the air filter cover (Fig. 5)
2. Remove the air filter (Fig. 6)
3. Remove 2 screws from the air filter base. Refer to red circles in Fig. 7
4. Remove air filter base. Refer to Fig. 8



Fig. 5



Fig. 6

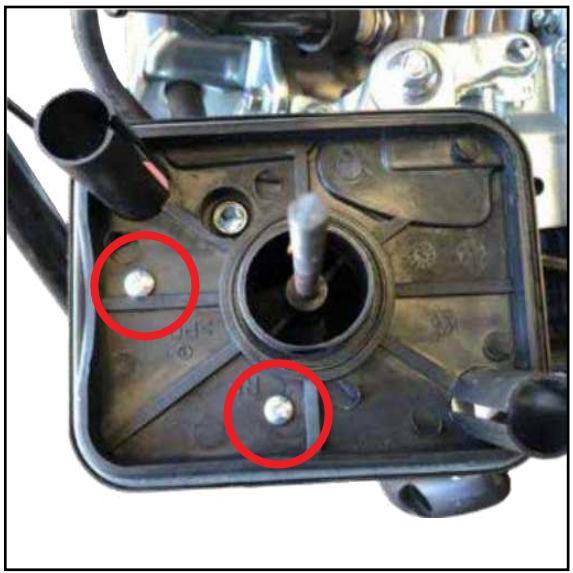

Fig. 7



Fig. 8

5. When mounting up the throttle cable there is two options,
   - Option 1- Z shape cable to be mounted in hole on throttle linkage. Refer to red circle in Fig. 9
   - Option 2 – Cut Z shape off throttle cable and mount into linkage slot nut. Refer to red circle in Fig. 10
6. Clamp down throttle cable. Refer to red circle in Fig. 11
7. Reinstall the air filter base, screws, air filter and air filter cover. (Check that air filter seal is in place. Refer to red circle in Fig. 12)



Fig.9



Fig. 10

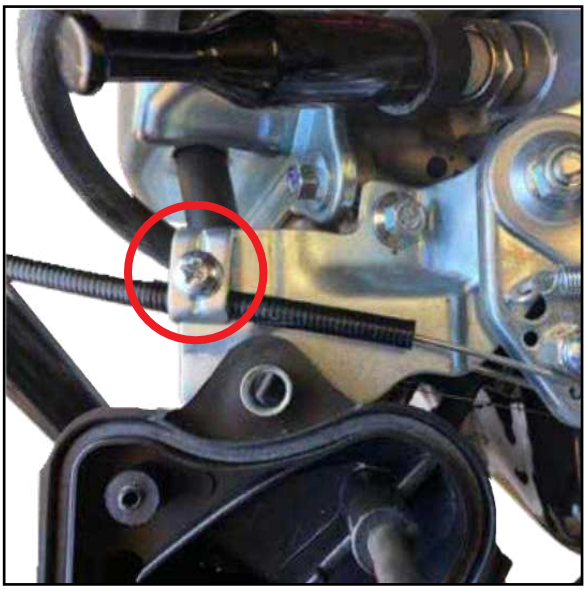

Fig. 11

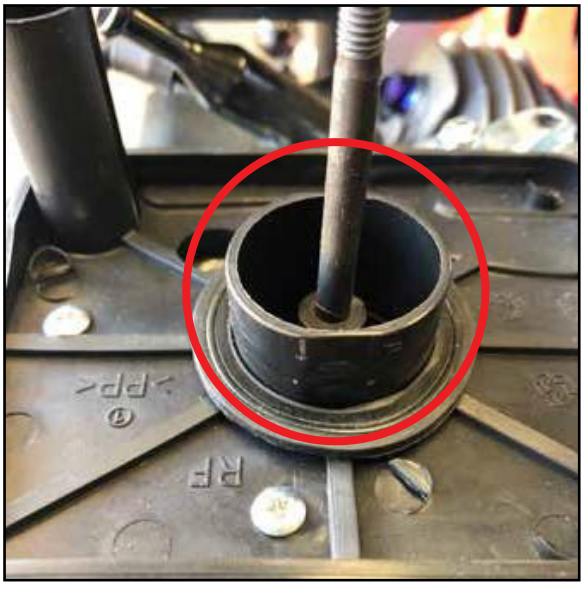

Fig. 12

5. PREPARING FOR USE

Filling with Engine Oil

Warning:

The mower is shipped from the factory with the oil drained out. Check and fill the engine with the correct oil type and volume. Check the oil level regularly. Read the engine instruction manual. Running the engine without the correct engine oil to the required level will damage the engine.

1. Ensure mower is on level ground.
2. Fill the oil to the top of the crankcase with SAE 30 Engine Oil. Refer to Fig. 13
- Refer to the appropriate diagram below.
- Fill the oil between upper and lower limit.

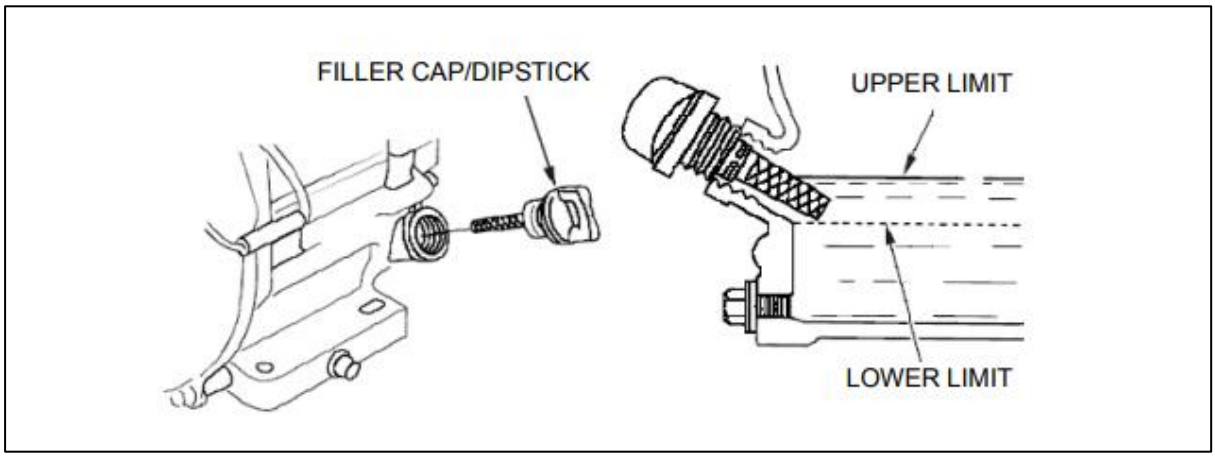

Fig. 13 Loncin Engine – Fortis 14L

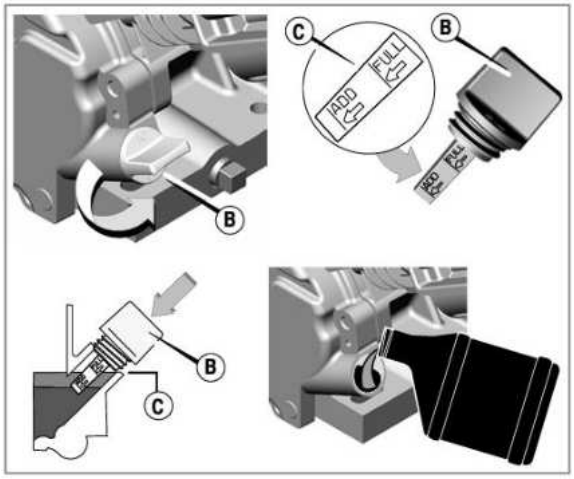

Fig. 13 Briggs and Stratton Engine

Fortis 17B, 20B and 20B

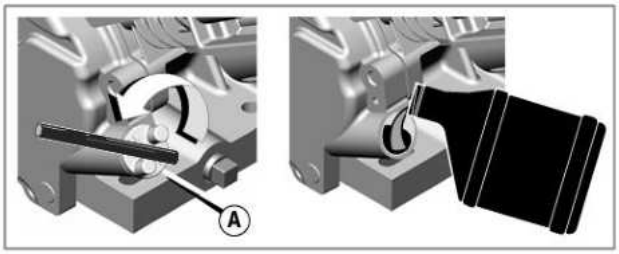

Filling with Petrol

Warning: Petrol is highly flammable.

Store fuel in containers specifically designed for this purpose.
Refuel outdoors only, before starting the engine and do not smoke while refueling or handling fuel. Never remove the cap of the fuel tank or add petrol while the engine is running or when the

engine is hot.

If petrol is spilled, do not attempt to start the engine, but move the machine away from the area of spillage and avoid creating any source of ignition until petrol vapors have dissipated.

Replace all fuel tanks and container caps securely.
Before tipping the lawn mower to maintain the blade or drain oil, remove fuel from tank.

Fill the fuel tank with Unleaded fuel. Use a funnel to avoid spills and do not overfill.

Check the Spark Plug connector

The spark plug connector should be firmly located on the spark plug. See the engine manual for maintenance of the spark plug and the correct gap settings.

Before completing any maintenance or changing cartridge cassettes always disconnect the spark plug connector to prevent the engine starting.

Check and Tighten Fixings

Before operating the mower inspect all fixings. Check screws, nuts and bolts and tighten as necessary.

Fit the Grass Collector

Fit catcher by hooking the base of the catcher over the support studs (A) on the body of the mower. The collector rests on the lower supports (B).

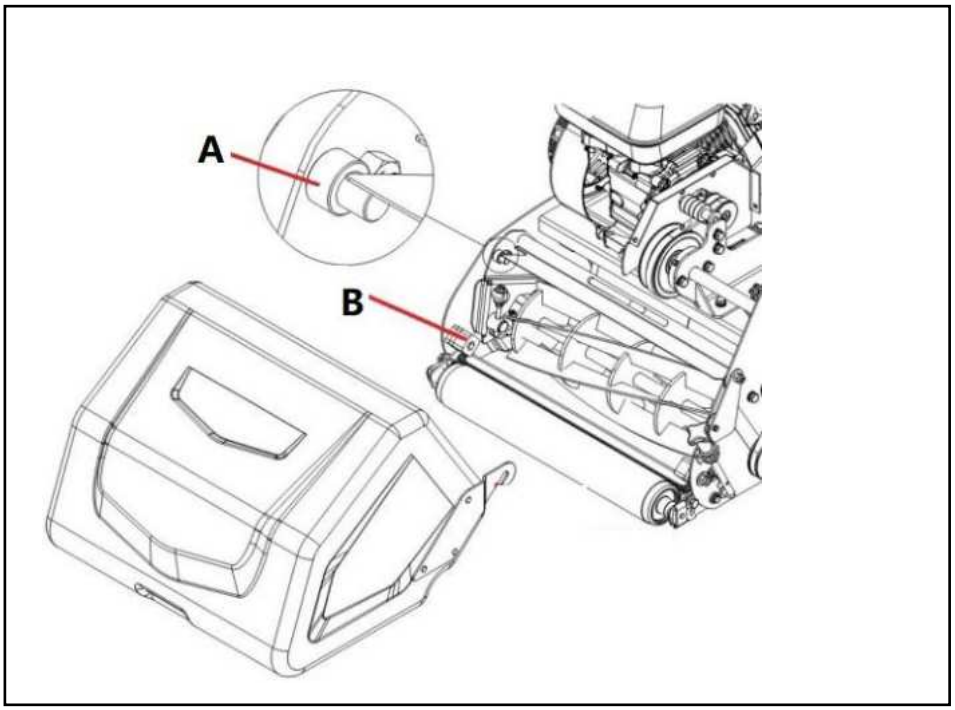

Fig. 14

6. OPERATION INSTRUCTION

Starting Procedure

Lawnmowers with the Loncin Engine

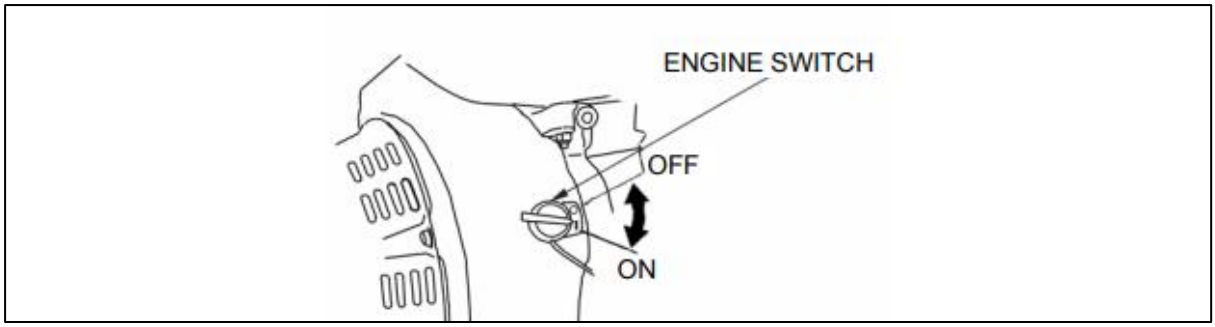

Fig. 15 – Select the ‘ON’ position on the engine switch.



Fig. 17 – Move the throttle control about 1/3 of the way toward the ‘FAST’ position.

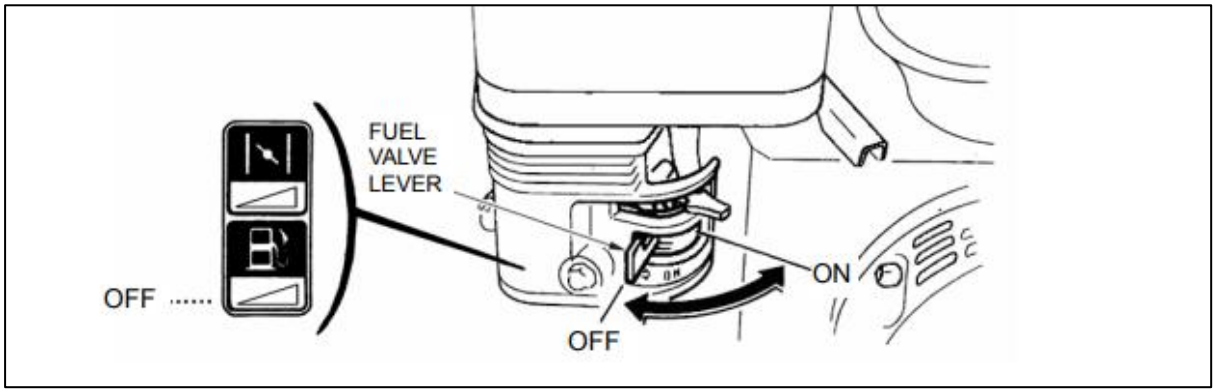

Fig. 18 **–** Move the fuel valve to ‘ON’ to allow the fuel to flow to the carburetor.

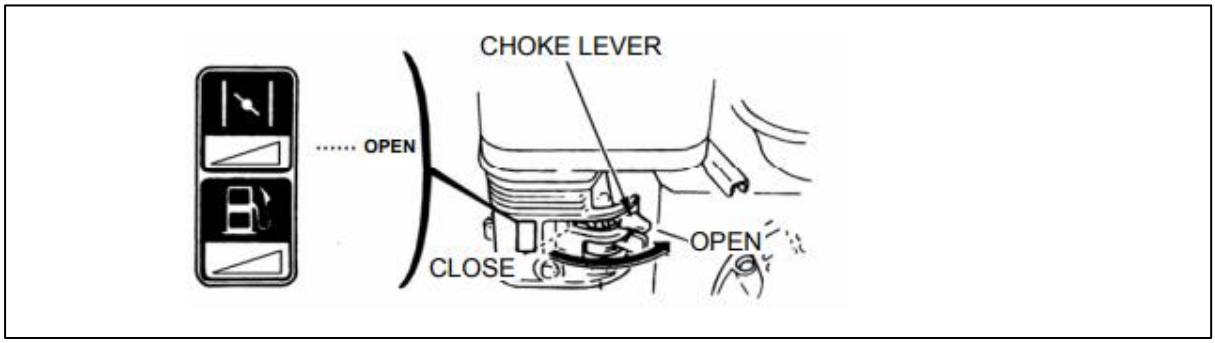

Fig. 19 – For a cold engine move the choke lever to the ‘CLOSE’ position. To restart a warm engine leave the choke lever in the ‘OPEN’ position.

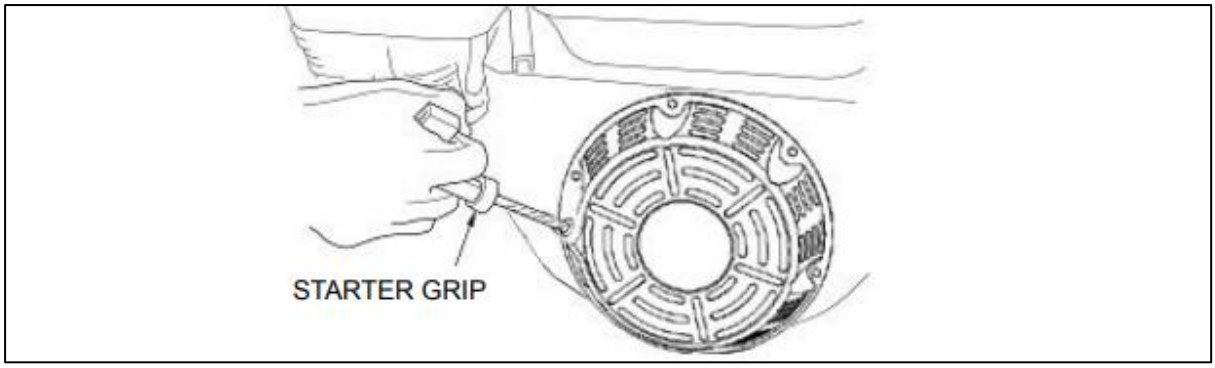

Fig. 20 - Pull the starter grip lightly until you feel resistance, then pull quickly. Return the starter grip gently. Repeat until the engine starts. Adjust the choke as required to avoid the carburetor becoming flooded (Fig.19).

Once the engine has started, gradually move the ‘CLOSE’ choke lever to ‘OPEN’ as the engine warms up.

For Lawnmowers with the Briggs and Stratton Engine

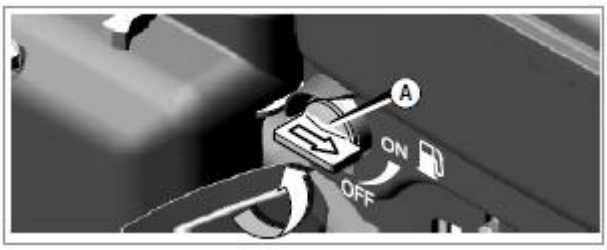

Fig. 21 – Move the fuel valve to ‘ON’

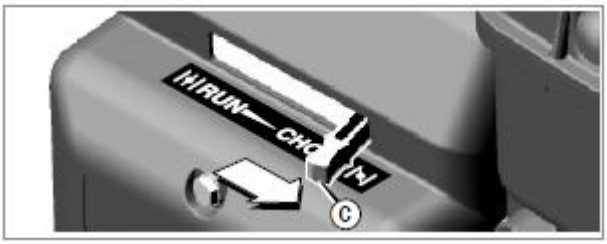

Fig. 22 - For a cold engine move the choke lever to the ‘CLOSE’ position. To restart a warm engine leave the choke lever in the ‘OPEN’ position.

Once started gradually move the ‘CLOSE’ choke lever to ‘OPEN’ as the engine warms up.



Fig. 23 – Move the throttle control to the ‘FAST’ position.



Fig. 24 – Select the ‘ON’ position on the engine switch control

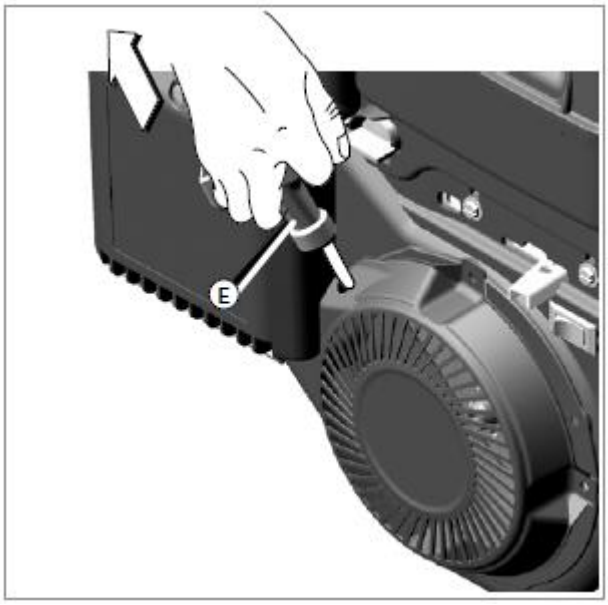

Fig. 25 - Pull the starter grip lightly until you feel resistance, then pull quickly. Return the starter grip gently.

Repeat until the engine starts. Adjust the choke as required to avoid the carburetor becoming flooded (Fig.22).

Once the engine has started, gradually move the ‘CLOSE’ choke lever to ‘OPEN’ as the engine warms up.

Lawnmowing Procedure

Preparation

Warning:

Check the area to be mowed thoroughly to remove debris from the lawn which may be projected from the mower. Stones, twigs, wire, and other debris will damage the lawnmower.

Operators must be familiar with the controls before taking control of the lawnmower. Bystanders and animals should be a safe distance away from the mowing area.

Check that the safety controls operate correctly. Check the drive and cutting system disengages when releasing the controls.



Fig. 26

Mowing Controls

Cylinder control lever:

Engage the cutting cylinder control by moving the lever slowly towards the handle bar. The cylinder blade will start to rotate. Release the cylinder control to stop the cylinder.

Warning: The blades continue to rotate after disengaging

Drive control lever:

Engage the power drive by moving the lever slowly towards the handle bar. The lawnmower will start to move forwards. Release the drive control lever and the mower will stop.

Throttle control:

The throttle control lever adjusts the speed of the engine, the cylinder and the drive. Set the speed towards the 'FAST' position gradually. Set the speed to suit the conditions and the operators requirements.

How to Stop the Lawnmower

Warning: The blade and drive will not stop immediately.



Fig. 26

In the case of an emergency 'STOP' release both the cutting cylinder and drive control levers. The engine will continue to run but the cutting cylinder and power drive will stop.

For a planned stop:

1. Slow the engine speed by moving the throttle lever to the 'SLOW' position.
2. Release the power drive clutch gradually. The drive will slow down to a stop.
3. Release the cutting cylinder control lever. The cylinder blade will stop.
4. Turn engine switch to 'OFF' – the engine will cut-out. Turn the fuel valve to the 'OFF' position.

Fitting and Emptying the Grass Collector

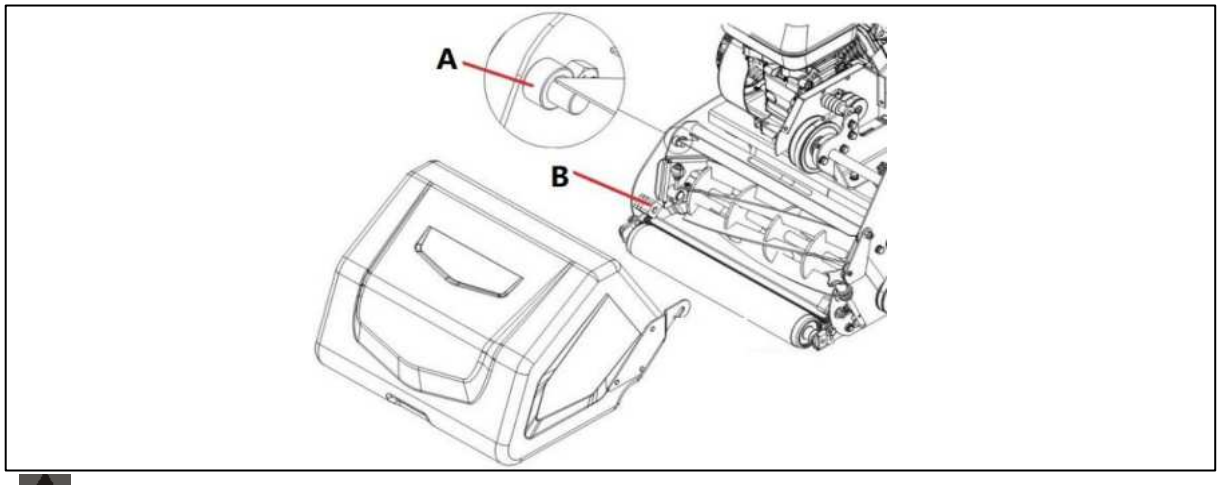

Warning: Turn the engine off before fitting or emptying the collector.

Fig. 27

1. Ensure the engine is stopped prior to removing or refitting the grass collector.

2. The grass collector is fitted by holding the top of the box and hooking the bottom section to the locating pegs (A), the catcher then sits on the rubber stops (B) either side of the chassis.

3. To remove the catcher, disengage the blade driver lever and stop the engine.
4. Lift the catcher from the top section and empty.

Changing the Height of Cut

Warning: Switch off the engine and disconnect the spark plug connector before making any adjustments of maintenance.



Fig. 30



Fig. 31

The height of cut is adjusted by turning the height control. The scale marked provides a guide to the cutting height set in mm. The height of cut operates by moving the position of the roller relative to the bottom blade.

-Turn the control knob clockwise to raise the cutting height.

-Turn the control knob anti-clockwise to lower the cutting height.

The 'L' marked are the scale indicates 'Low' for use with specific cartridge cassettes requiring the lowest operating height.

Cylinder to Bottom Blade Gap Adjustment

Warning: Switch off the engine and disconnect the spark plug connector before making any adjustments of maintenance. Wear safety gloves to protect against cuts from the blades.

The Fortis Cylinder mower cutting system is designed for efficient and precise cutting. To maintain the cutting precision follow the instructions below. The cylinder blade should always cut cleanly and evenly when set correctly. The blades are a wearing item and as such will need periodic sharpening to maintain the cut precision.

- Empty the fuel from the tank and switch off at the engine switch
- Disconnect the spark plug connector.
- Tilt the mower backwards towards the handles

The cylinder blades should be adjusted so that they lightly touch the bottom blade. Test with paper at several positions across the bottom blade to ensure it is adjusted correctly across the width of the blade. Place the test paper between the cylinder and the bottom blade. The paper should cut cleanly and the cylinder rotates easily.

To adjust the gap between the cylinder and the bottom blade, wearing safety gloves:

1. Loosen the bolt on both sides of mower. Refer to red circles on Fig. 32 & Fig. 35.
2. Loosen nuts on the bottom of the adjustment screw. Refer to red circle on Fig. 33 & Fig. 36.
3. Turn the adjustment screw on both sides, so the cylinder blade to make contact with the bottom blade. The blade must only 'just' make contact, whilst still allowing it to rotate freely. Refer to red circles Fig. 34 & Fig. 37.
4. Re-tight nuts. Fig. 33 & Fig. 36.
5. Re-tighten bolts. Fig. 32 & Fig. 35.
6. Test the cutting action with paper as previously described. Should the paper not cut satisfactorily, the cylinder may need to be sharpened. Contact your local Cobra dealer.



Fig. 32



Fig. 33



Fig. 34



Fig. 35



Fig. 36



Fig. 37

Cylinder Blade Drive Belt Control Adjustment

Warning: Switch off the engine and disconnect the spark plug connector before making any adjustments of maintenance.

Following the adjustment to the blade settings, or as a regular maintenance procedure, the adjustment control should be checked and adjusted from time to time.
1. Remove side cover screws. Refer to red circles. Fig. 37.
2. Loosen lock nut. Refer to red circle. Fig. 38.
3. Adjust the cable tension until there is a 5-6mm up and down movement in the belt. Refer to red arrow. Fig. 39.
4. Re-tighten the lock nut. Fig. 38.
5. Refit the side cover and secure with the two screws. Fig. 38.

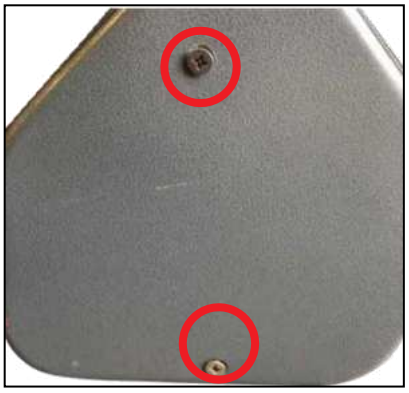

Fig. 38



Fig. 39



Fig. 40

Drive Control Adjustment

Warning: Switch off the engine and disconnect the spark plug connector before making any adjustments of maintenance.

The drive control lever mechanism is adjustable to apply more or less tension on the drive belt.

1. Access the drive control cable adjustment by removing the two screws of the side cover.
2. Loosen the two lock nuts. Refer to red circles Fig. 41.
3. Slide the long bolt upwards until the belt has 1-2mm up and down movement.
4. Tighten the lock nuts. Fig. 41. Refit the side cover with the two screws.

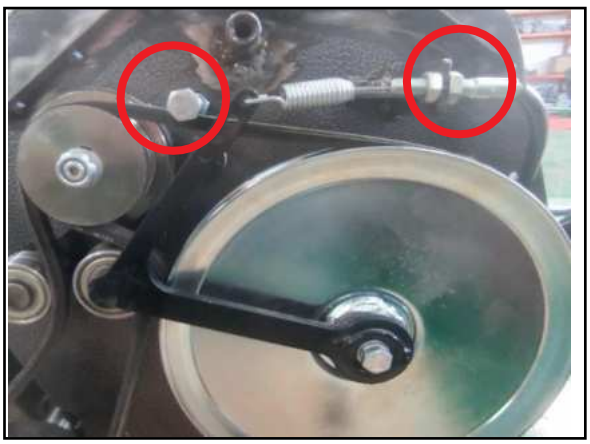

Fig. 41

Handle Position Adjustment



Fig. 42



Fig. 43



Fig. 44

The height of the handles may be adjusted to suit the operator.

At the lower section of the handle, the securing bolts should be loosened to adjust the angle of the handles. The side cover should removed to access the two bolts on this side.

Once the required height is set, secure the bolts on each side. Refit the side cover with the two bolts.

Lubrication and Maintenance

Warning: Switch off the engine and disconnect the spark plug connector before making any adjustments of maintenance.

Lubrication Points

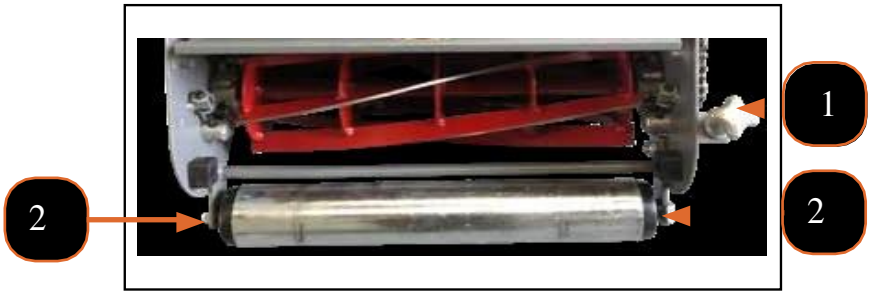

Fig. 45

Regular maintenance is essential to keep your lawnmower performing optimally and ensure it operates safely. Routine lubrication of the following is required:

1. Height of cut adjuster knob – apply oil to the shaft. Fig. 45
2. The inner shaft of the front roller. Lubricate with oil. Fig. 45

7. SAFETY CHECKS, SERVICE & MAINTENANCE

Warning: Complete safety checks regularly. Read the engine manual.

Before starting to use the lawnmower complete safety checks, including checking guards, controls operate correctly (blade and drive stop when levers are released). Check the oil level and add if required. Check fixings are secure.

Clean the lawnmower with a cloth. Remove grass and dirt from the mower, but paying particular attention to bearings, pulleys and moving parts. Do not hose or pressure washer the lawnmower.

The lawnmower must serviced regularly. For normal homeowner use, the lawnmower should be serviced by a Cobra service dealer annually, however where the lawnmower is used more frequently ensure the lawnmower is serviced more regularly.

Refer to the engine manual for engine service intervals based on the hours of usage.

8. CHANGING THE CARTRIDGE CASSETTE

Warning: Switch off the engine and disconnect the spark plug connector before making any adjustments of maintenance.

The Fortis lawncare system has a total of 7 different cartridges, including the standard 6 bladed cutting cartridge provided with the lawnmower.

Lawncare professionals know that a beautiful lawn requires the right tools to maintain and cultivate the quality of the turf. Easily switch your lawnmower to scarify, dethatch, brush, verticut, and aerate. The 10 bladed cartridge is the ideal option for the finest lawns or professional sports playing greens and pitches.



Removing and Fitting the Fortis Cartridge

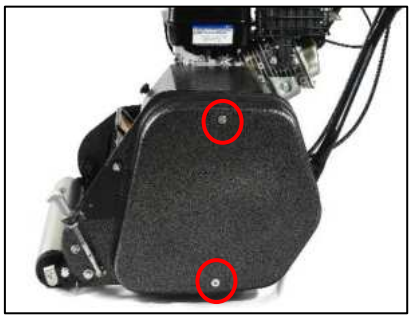

Fig. 46



Fig. 47

Fig. 49

Fig. 51

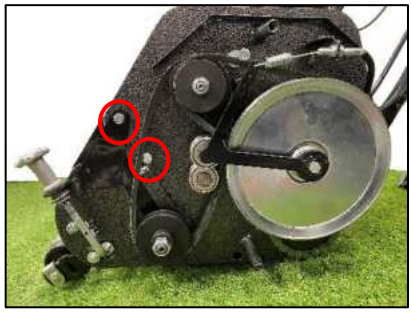

Fig. 48

Fig. 50



Cartridge securing plate removed

Removing the Cartridge

1. Remove the side cover, unscrewing the 2 bolts highlighted in the red circle. Fig.46
2. On the other side of the mower, remove the bolts securing the cartridge which is highlighted in fig. 47.
3. Remove the 2 bolts from the pulley and belt side of the mower. These are highlighted in fig. 48, remove the securing plate that holds the cartridge in place.

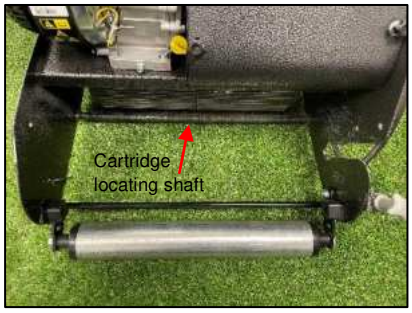



4. Carefully remove the belt from the cartridge pulley. Fig. 49 shows the belt removed from the cartridge pulley.
5. Remove the cartridge carefully, keeping the unit square and lifting out by holding the handles of the cartridge.

Fitting the Cartridge

1. With the cartridge slot empty, as shown in fig. 50, present the cartridge to the mower such that the cartridge pulley is the side with the mower belts and pulleys. The cartridge shaft should be aligned with the slot shown in fig. 49 showing the cartridge pulley in the located position.
2. Lower the cartridge in place keeping the cartridge sides parallel to the mower sides. Rotate the cartridge, so that the locating notch (fig. 51 red circle) of the cartridge fits to the cartridge locating shaft in Fig. 50.
3. Attach the cartridge belt, fig. 48, fit the securing plate with the bolt. Fit the other bolt highlighted in fig. 48.
4. Refit the side cover with the 2 bolts. Fig. 46
5. On the opposite side of the mower, fit the cartridge bolt as shown in fig.47.

9. FAULT DIAGNOSIS & REMEDY

Warning: Switch off the engine and disconnect the spark plug connector before making any adjustments of maintenance.

Condition	Possible Cause	Remedy
Grass is not cleanly cut or grass is ripped.	The cylinder to bottom blade gap is incorrect.	Check and adjust the gap. Check and sharpen the cylinder if necessary.
The cut is not consistent. Some areas are not cut correctly.	The cylinder to bottom blade gap is not 'on-cut' across the whole blade. The blade system is damaged.	Check and adjust the gap. Check and sharpen the cylinder if necessary. Damaged – see a Cobra dealer
Engine starting problems.	Engine is flooded. Spark plug lead not connected. Spark plug is dirty.	Leave for 10 – 15 minutes Reconnect See engine maintenance manual
Engine stops Engine does not stop	No petrol Engine speed too low for conditions. Cutting cylinder obstructed	Refill petrol Increase the throttle speed Turn off engine and clear obstruction Throttle cable not correctly adjusted. Stop engine by removing spark plug lead and refer to the engine maintenance manual.
Cutting cylinder does not rotate	Cutting cylinder obstructed Cylinder adjustment incorrect	Remove obstruction. Adjust the cylinder bottom blade gap.
Power drive does not work	Incorrect adjustment/cable damaged	Adjust the drive cable so that the drive operates.
Excessive vibration or noise	Blade system or other mower part damaged Engine fault	Contact the local Cobra dealer See engine maintenance manual

10. TECHNICAL DATA

Model	Fortis 14L	Fortis 17B	Fortis 20B	Fortis 25B
Engine type	Loncin G200F	B&S XR550		B&S XR750
Self-Propelled	Yes			
Engine Displacement	196cm³	127cm³		163cm³
Nominal Power	4.1kW	2.6kW		3.7kW
Blade Width	14in (36cm)	17in (43cm)	20in (51cm)	25in (63cm)
Rated Speed	3600/min			
Fuel Tank Capacity	3.6L	1.9L		3L
Grass catcher capacity	55L	65L	75L	90L
Net Weight	74kg	83.6kg	89.2kg	104.8kg
Height adjustment:	6mm to 30mm with 6 Bladed Cartridge. As low as 3mm with the opt. 10 Blade			

11. WARRANTY

This product is warranted in accordance with legal regulations for a 24 month period effective from the date of purchase by

the first user when used by domestic users. Where the lawnmower is used by a professional user the warranty period will be 12 months from the date of purchase.

The intended use is fine domestic lawn maintenance and fine sports turf lawns.

This warranty covers all material or production failures, it does not include: defects from normal wear and tear, parts such as, bearings, brushes, cables, air cleaning elements, brake pad, clutch disc, tyre, wheel, recoil starter rope, belts, cutter blades, plugs, lubricant oils and grease or accessories. Damage or defects resulting from abuse, accidents or alterations, natural fading of painted or plated surfaces, sheet peeling and other natural deterioration.

Any damage that occurs from the use of non-genuine Cobra parts will not be covered.

We reserve the right to reject any claim where the purchase cannot be verified or when it is clear that the product was not maintained properly. (Clean ventilation slots, carbon brushes and serviced regularly)

Expenses incidental to the warranty claim that are not covered;

-Compensation for loss of time, commercial loss or rental costs of substitute product.

-Costs incurred for transportation to and from the dealership.

Any damage that occurs from the following will not be covered; exposure of the product to smoke and soot, chemical agents, bird droppings or other animal waste, seawater, sea breeze, salt or other environmental phenomena.

Any damage resulting from operating methods other than those indicated in the owner's manual will not be covered.

Your purchase receipt must be kept as proof for date of purchase. Your un-dismantled mower must be returned to your dealer in an acceptably clean state, accompanied by your proof of purchase.

Please Register Your Mower

If your dealer did not collect registration information from you, please take a few minutes and register your purchase with Cobra.

You can register by going online to www.cobragarden.co.uk and clicking on Product Registration.

Before using the lawn mower, all mower operators must read this manual.

Environment

Should your machine need replacement after extended use, do not put it in the domestic waste but dispose of it in an environmentally safe way.

CE

12. EC DECLARATION OF CONFORMITY

We herewith declare,	Cobra Garden Machinery Henton & Chattell Ltd, London Road, Nottingham NG2 3HW United Kingdom
that the following machine complies with the appropriate basic safety and health requirements of the EC Directive based on its design and type, as brought into circulation by us.	
In case of alteration of the machine, not agreed upon by us, this declaration will lose its validity	
Machine Description:	Lawn Mower
Machine Type:	Fortis14L (RMC14), Fortis17B (RMC17) Fortis20B (RMC20), Fortis25B (RMC25)
Displacement:	Fortis14L (RMC14) -196 cm^3, Fortis17B (RMC17) -127 cm^3 Fortis20B (RMC20) -127 cm^3 , Fortis25B (RMC25) -163 cm^3
Cutting width:	Fortis14L (RMC14) -36cm, Fortis17B (RMC17) -43cm Fortis20B (RMC20) -51cm, Fortis25B (RMC25) -63cm
Measured sound power level	Fortis14L (RMC14) -92.6dB(A), Fortis17B (RMC17) -92.8dB(A) Fortis20B (RMC20) -92.5dB(A), Fortis25B (RMC25) -95.4dB(A)
Guaranteed sound power level:	Fortis14L (RMC14), Fortis17B (RMC17), Fortis20B (RMC20) -96dB(A) Fortis25B (RMC25) -98dB(A) Notified Body for EC Directive 2000/14/EC:0036 FORCE Technology, Notified Body No. 0199, Park Alle 345, DK-2605 Brøndby, Denmark
Applicable EC Directives:	2006/42/EC 2014/30/EU 2000/14/EC
Applicable Harmonized Standards:	EN ISO 5395-1 EN ISO 5395-2 EN ISO 14982
Authorized Signature/Date/ Place:	 Peter J. Chaloner 26/3/2023
Title of Signatory:	Managing Director
Name and address of the person authorized to compile the technical file	Cobra Garden Machinery, Henton & Chattell Ltd, London Road, Nottingham NG2 3HW UK