LawnMaster



90003CNU

17" CASSETTE

REEL MOWER

ILLUSTRATED COX PART LISTING (IPL)

A STEELFORT PRODUCT

PRO
NZ

Handle
Assembly & Parts List

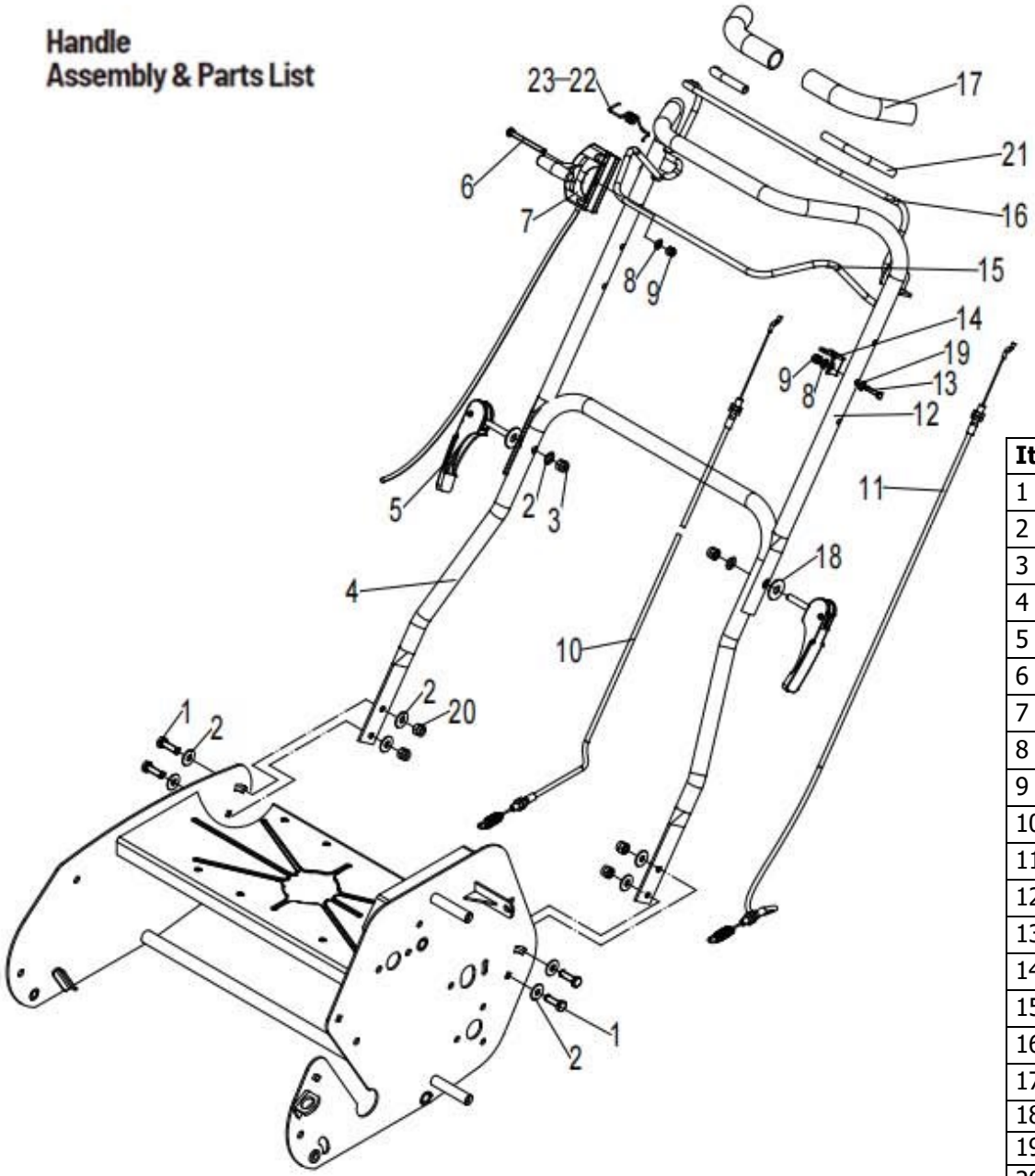

Item	Part Number	Description	Qty
1	LM701088	Hex head bolt - full thread M8×20	4
2	LM7030819	Flat Washer- A 8	10
3	LM7020803A	Hex lock nut M8	2
4	LM4034689-9005	Lower handle (17")	1
5	LM4034708	Locking handle assembly	2
6	LM7010655	Bolt M6×55	1
7	LM5071051	Throttle box assembly	1
8	LM7030601	Flat Washer- A 6	2
9	LM7020602A	Hex lock nut M6	2
10	LM5070101	Cylinder clutch cable	1
11	LM5070102	Self-propelled clutch cable	1
12	LM4034692-9005	Upper handle	1
13	LM7010648	Bolt M6×35	1
14	LM4220040-9005	Brake support	1
15	LM4034956-9005	Cylinder clutch handle	1
16	LM4016831-9005	Self-propelled clutch handle	1
17	LM4020540	Grip	2
18	LM7030813	Big washer-A 8	2
19	LM7030604	Big washer-A 6	1
20	LM7020803	Hex lock nut M8	4

Front Roller & Rear Drive Roller Assembly

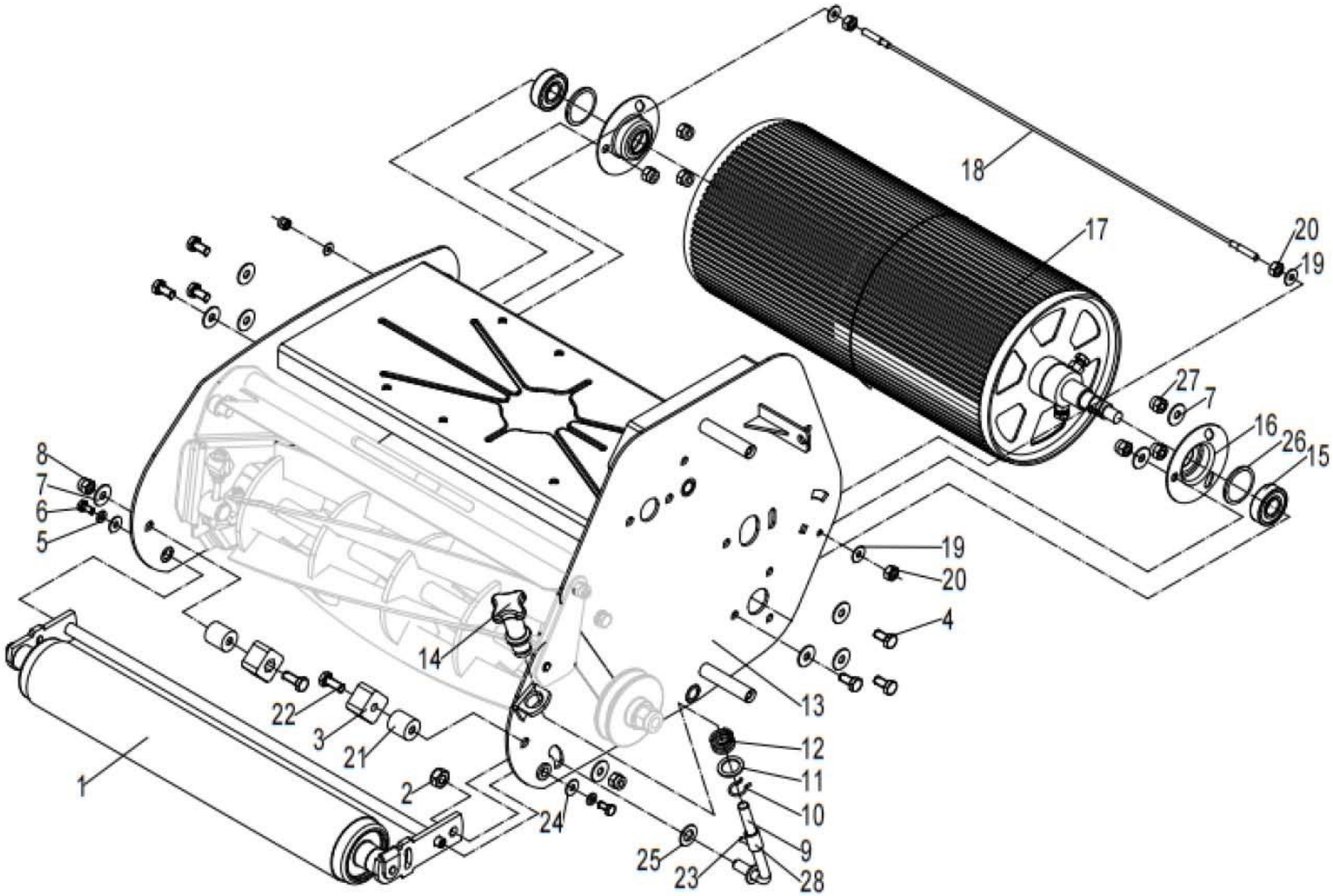

Front Roller & Rear Drive Roller Parts List

Item	Part Number	Description	Qty
1	LM8011596	Front roller assy (17″)	1
2	LM7021004A	Hex lock nut M10	1
3	LM4211260	Grass box support rubber sleeve	2
4	LM7010888	Hex head bolt - full thread M8×20	6
5	LM7040602	Washer - 6	2
6	LM7010673	Hex head bolt - full thread M6×12	2
7	LM7030819	Flat Washer- A 8	14
8	LM7020803A	Hex lock nut M8	2
9	LM4016821	Stubble handle connecting rod	1
10	LM7141402	Circlip 14	1
11	LM4163420	Gasket	1
12	LM7054040	Compression spring	1
13	LM4034691-1235C	Frame (17″)	1
14	LM4016810	stubble handle	1
15	LM7061237	Deep groove ball bearing	2
16	LM4070780	Rear drive roller bearing housing	2
17	LM8011815	Rear drive roller assembly (17″)	1
18	LM4170171	steel wire rope (17″)	1
19	LM7030601	Flat washer- A 6	4
20	LM7020604	Hex nut M6	4
21	LM4034706	Rubber gasket	2
22	LM7010837	Hex head bolt - full thread M8×35	2
23	LM7130401	Elastic parallel pin - 4×20	1
24	LM7030604	Washer - A 6	2
25	LM7031009	Flat washer- A 10	1
26	LM4165808	Bearing seat washer	2
27	LM7020803	Lock nut M8	6
28	LM1013649	Sleeve	1

Rear Drive Roller
Assembly & Parts List

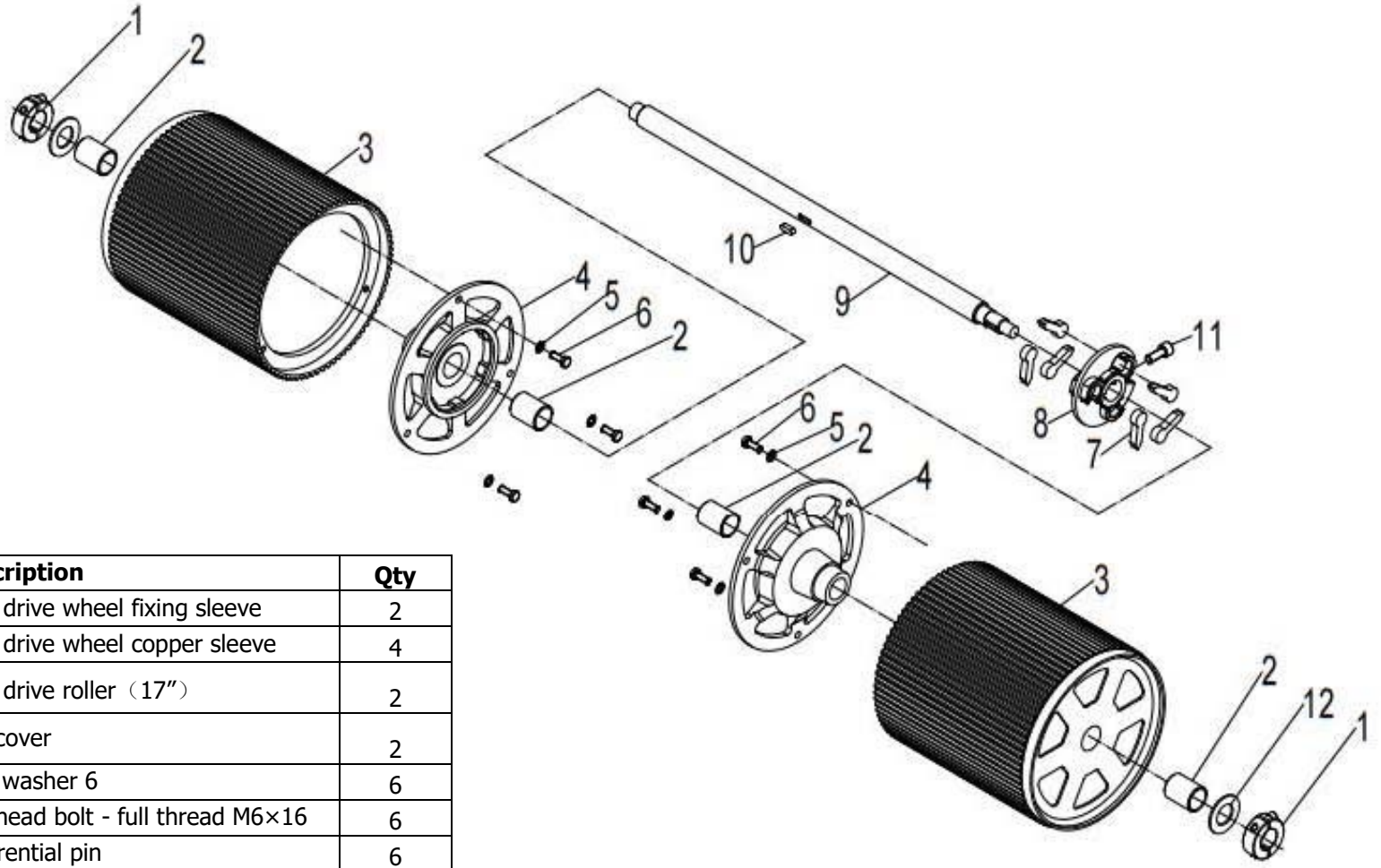

Item	Part Number	Description	Qty
1	LM7084271	Rear drive wheel fixing sleeve	2
2	LM7084310	Rear drive wheel copper sleeve	4
3	LM8011570-JH4P7033-2	Rear drive roller（17″）	2
4	LM4069580-JH4P7033-2	End cover	2
5	LM7040604	Lock washer 6	6
6	LM7010662	Hex head bolt - full thread M6×16	6
7	LM4021450	Differential pin	6
8	LM7101130	Differential	1
9	LM3011056	Rear drive shaft 553	1
10	LM7110501	Key-A 5×5×16	1
11	LM7240883	Hexagon socket head screw M8 ×20	1
12	LM4165809	Retainer ring	1

Front Roller
Assembly & Parts List

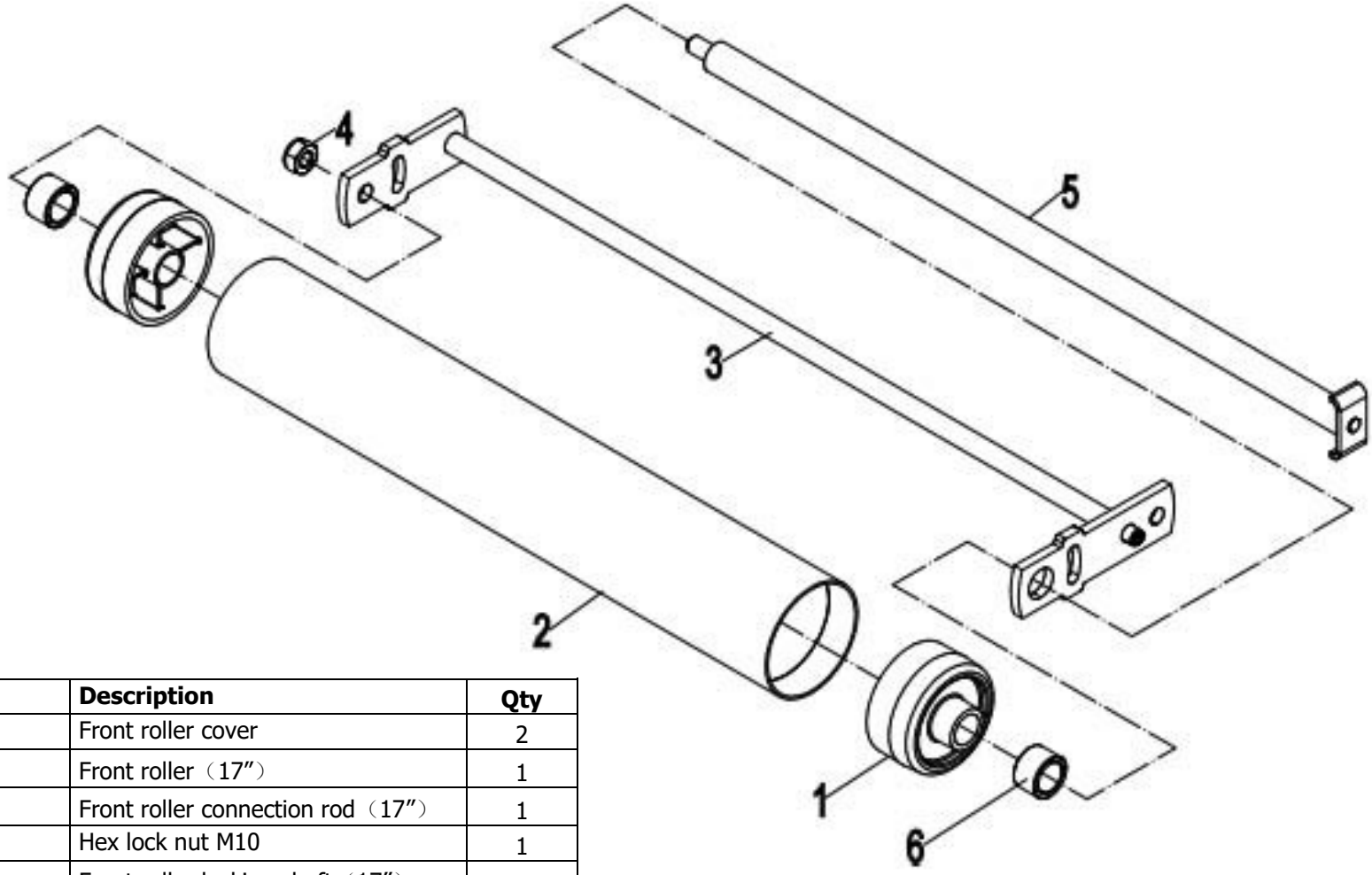

Item	Part Number	Description	Qty
1	LM7084280	Front roller cover	2
2	LM8011580	Front roller（17”）	1
3	LM4034703-9005	Front roller connection rod（17”）	1
4	LM7021004A	Hex lock nut M10	1
5	LM4034704	Front roller locking shaft（17”）	1
6	LM4034707	Front wheel spacer	2

Transmission Assembly

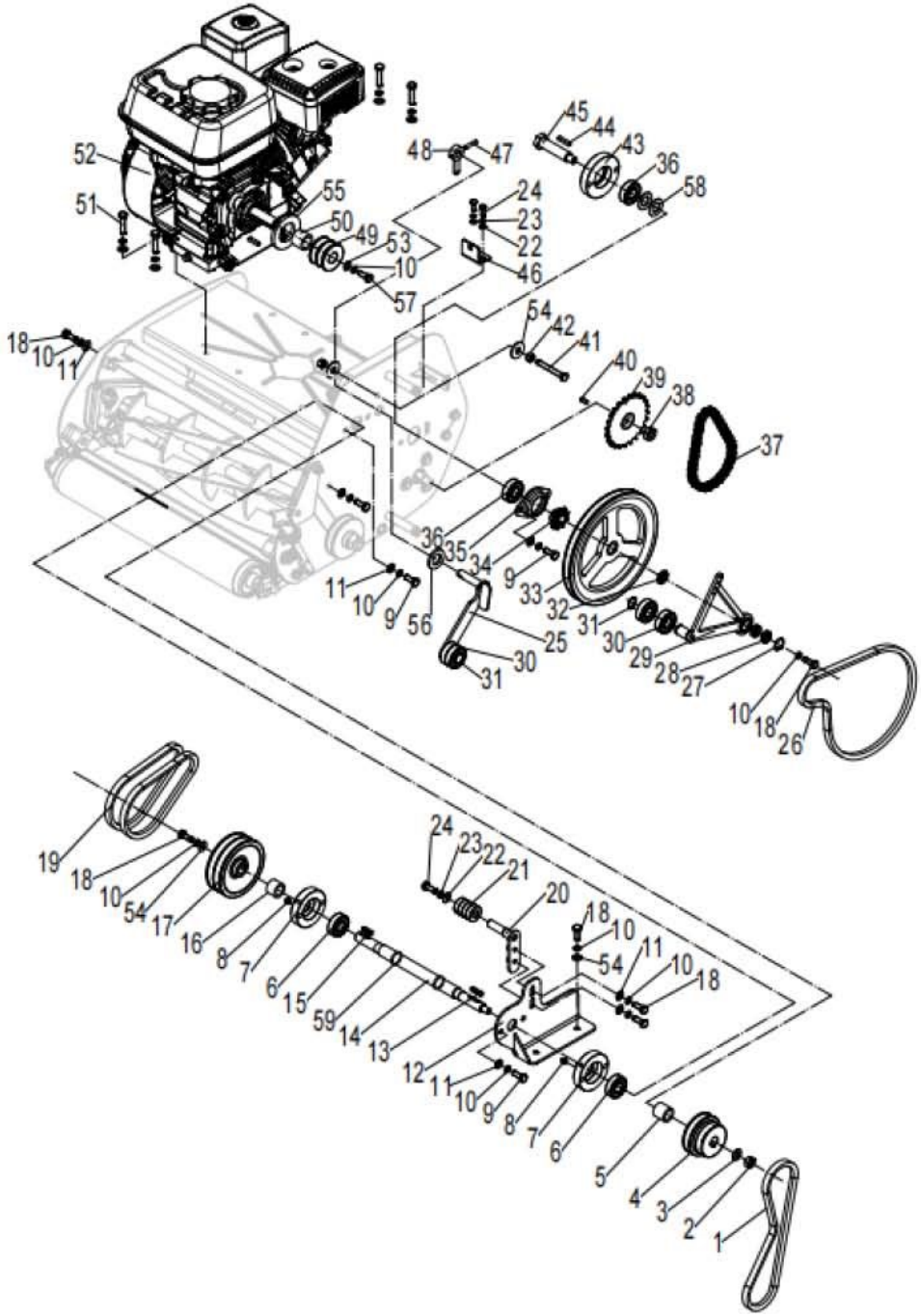

Transmission Assembly Parts List

Item	Part Number	Description	Qty
1	LM1050665	Belt	1
2	LM7021004A	Hex lock nut M10	1
3	LM7031009	Flat Washer- A 10	1
4	LM1042022	Drive double pulley	1
5	LM4034699	Pulley spacer	1
6	LM7060302	Bearing 1203-TN1	2
7	LM4070871	Bearing housing (with grease fitting)	2
8	LM7320601	Pressure filling cup M6-stainless steel	2
9	LM7010821	Hex head bolt - full thread M8×25	6
10	LM7040802	Spring washer 8	16
11	LM7030819	Flat Washer- A 8	12
12	LM4034683-9005	Shaft fixing plate	1
13	LM7110505	Key-A 5×5×25	1
14	LM1013581	Drive shaft	1
15	LM7110506	Key-A 5×5×20	1
16	LM4034698	Shaft pulley spacer	1
17	LM1042021	Drive shaft pulley	1
18	LM7010888	Hex head bolt - full thread M8×20	8
19	LM1050117	Belt	2
20	LM4034684-9005	Belt tension plate	1
21	LM7061207	Deep groove ball bearing	4
22	LM7030601	Washer - A 6	2
23	LM7040602	Spring washer 6	2
24	LM7010667	Hex head bolt - full thread M6×20	2
25	LM4034682-9005	Belt tension plat	1
26	LM1050806	Belt	1
27	LM7142399	Circlip A 21	1
28	LM7061209	Deep groove ball bearing 61801-2RS	2
29	LM4034712-9005	Self-propelled clutch plate	1
30	LM7061224	Deep groove ball bearing	4
31	LM7141702	Circlip A 17	2
32	LM4034697	Spacer	1
33	LM1042024	Rear roller drive pulley	1
34	LM1020751	Drive roller sprocket 9 teeth	1
35	LM4070911	Bearing housing	1

Item	Part Number	Description	Qty
36	LM7061237	Deep groove ball bearing	2
37	LM1060830	Self-propelled transmission chain 32（084)	1
38	LM7021273A	Lock nut M12	1
39	LM1020752	Rear wheel sprocket 24 teeth	1
40	LM7110501	Key-A 5×5×16	1
41	LM7010880	Hex head bolt M8× 70	1
42	LM7020804	Hex nut M8	2
43	LM4070872	Transition shaft bearing housing	1
44	LM7110504	Key-A 5×5×30	1
45	LM1013582	Pulley fixed shaft	1
46	LM4034681-9005	Bracket	1
47	LM7130505	Spring Pin - 5×25	1
48	LM4034695	Clutch bracket(9005)	1
49	LM1042025	Engine belt pulley	1
50	LM4034688	Engine spacer	1
51	LM7010837	Hex head bolt - full thread M8×35	1
52		BS XR550 engine	1
53	LM7080470	Engine pressure pad	1
54	LM7030813	Washer - A 8	5
55	LM7032006	Washer-A 20	1
56	LM4160500	Washer	2
57	LM7010068A	Hex head bolt - 5/16-24×1	1
58	LM4165803	Spacer sleeve	2
59	LM7071901	O-ring 19×2.65-G	2

Grass Catcher & Shield Assembly & Parts List

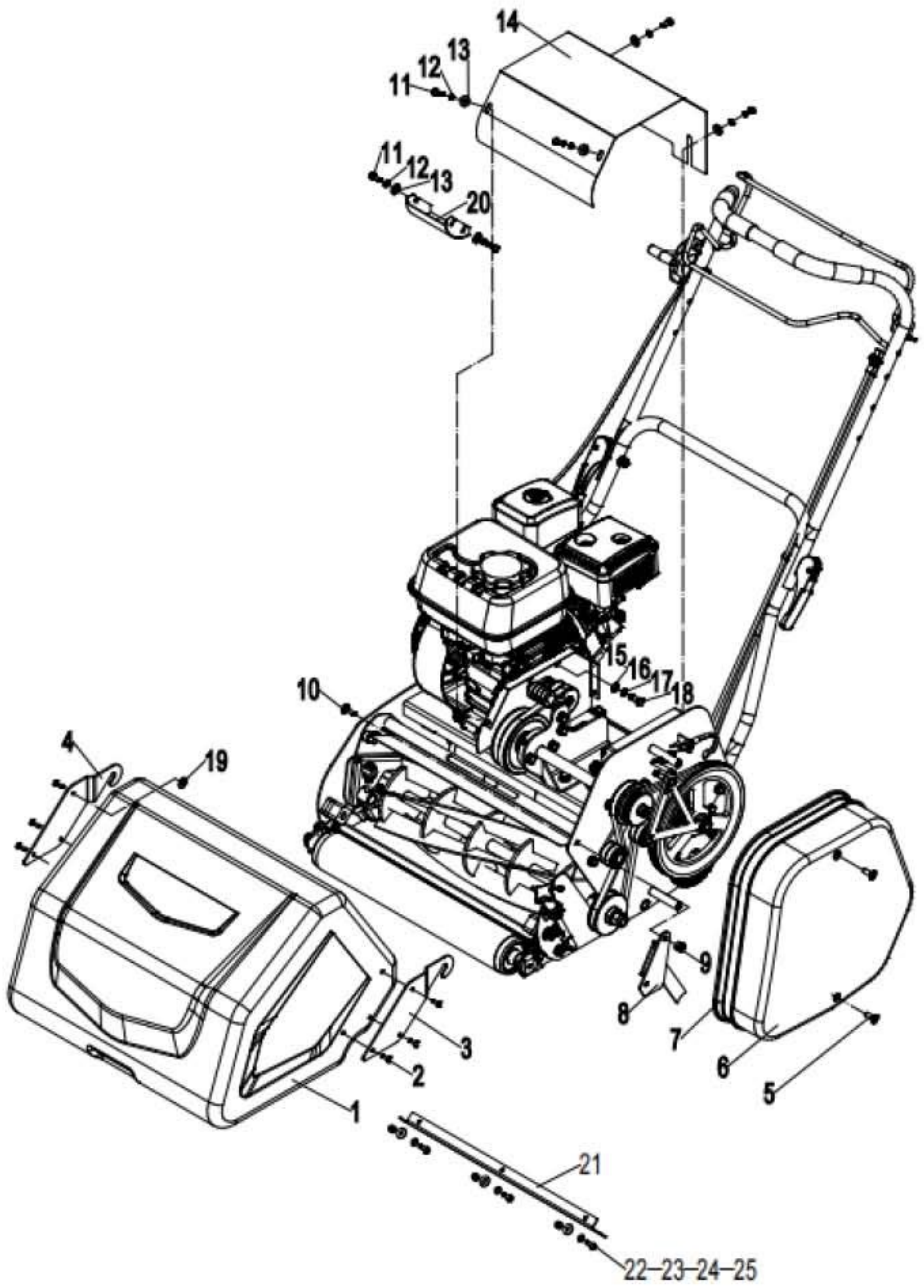

Item	Part Number	Description	Qty
1	LM3011044	Grass box (17”)	1
2	LM7230510	Rivets 4.8×16	6
3	LM4034953-9005	Grass box left connecting plate	1
4	LM4034954-9005	Grass box right connecting plate	1
5	LM7240849	Screw-H type M8×20	2
6	LM4034941-1235C	Guard	1
7	LM4034942	Seal	1
8	LM4034694-9005	Sealing plate	1
9	LM7020803A	Hex lock nut M8	1
10	LM7180812	Bolt M8×20	1
11	LM7010662	Hex head bolt - full thread M6×16	7
12	LM7040602	Spring washer 6	7
13	LM7030604	Washer - A 6	7
14	LM4034686-1235C	Belt clutch guard	1
15	LM4034687-1235C	Guard Backplane	1
16	LM7030819	Flat Washer- A 8	3
17	LM7040802	Spring washer 8	3
18	LM7010048A	Hex head bolts - fully threaded 5/16-24 x 3/4	3
19	LM7030421	Grass box flat mat	6
20	LM4016828-1235C	Sealing plate	1
21	LM4034955-9005	Stop Plate (17”)	1
22	LM7260646	Screw-H type M6x20	3
23	LM7030601	Flat Washer A6	3
24	LM7030604	Big Washer A6	3
25	LM7020602A	Hex Lock Nut M6	3
	LM3011044A	17” Grass box assy (including item 1,2,3,4,19)	1

Cutting Cyclinder Assembly

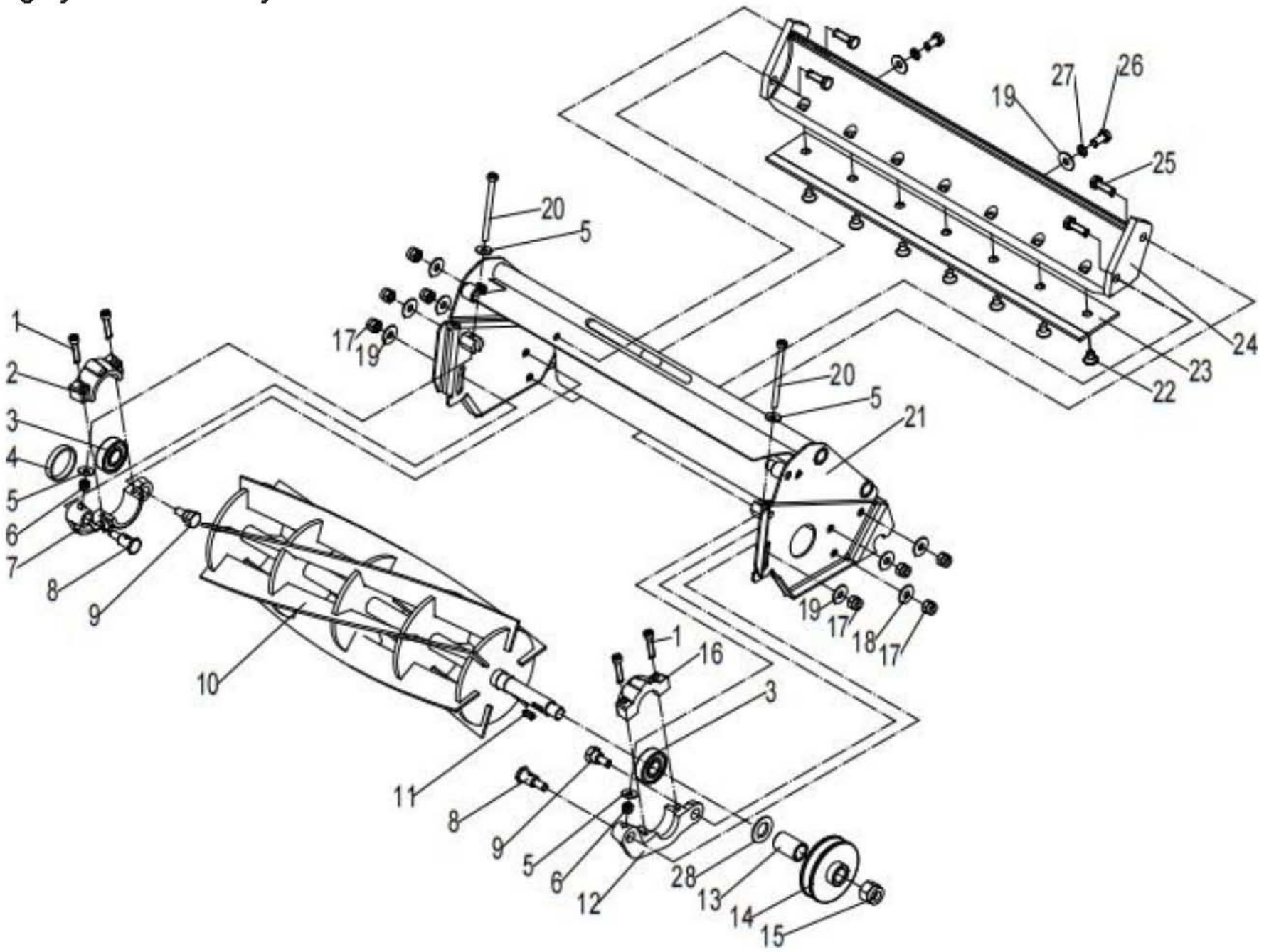

Cutting Cylinder Parts List

Item	Part Number	Description	Qty
1	LM7240622	Hexagon socket head screw M6×30	4
2	LM4070810	Right bearing housing (upper)	1
3	LM7061237	Deep groove ball bearing 6203Z-NSK	2
4	LM4163490	Spacer	1
5	LM7030604	Washer - A 6	4
6	LM7020615A	Hex lock nut M6-LH	2
7	LM4070820	Right bearing housing (lower)	1
8	LM1070290	Bolt(with holes)	2
9	LM1070280	Bolt	2
10	LM3011051	17″ cutting cylinder 568	1
11	LM7110501	Key-A 5×5×16	1
12	LM4070800	Left bearing housing (lower)	1
13	LM4034702	Pulley spacer	1
14	LM1042023	Drive pulley	1
15	LM7021407A	Hex lock nut M14	1
16	LM4070790	Left bearing housing (upper)	1
17	LM7020803	Hex lock nut M8	8
18	LM7030819	Flat Washer- A 8	10
19	LM7030813	Washer - A 8	4
20	LM7290612	Slotted cylindrical head screw M6×80-L	2
21	LM4034922A-9005	Bracket (17″ cylinder blade)	1
22	LM7290881	Screw-M8×12-A2-70	6
23	LM3011060	Bed knife（17″）	1
24	LM4034921-9005	Bed knife holder（17″）	1
25	LM7010821	Hex head bolt - full thread M8×25	4
26	LM7240809	Hexagon socket head screw M8×16	2
27	LM7040802	Spring washer 8	2
28	LM4165803	Spacer sleeve	1

LMC10B17 10 Blade Cartridge (Optional) Parts List

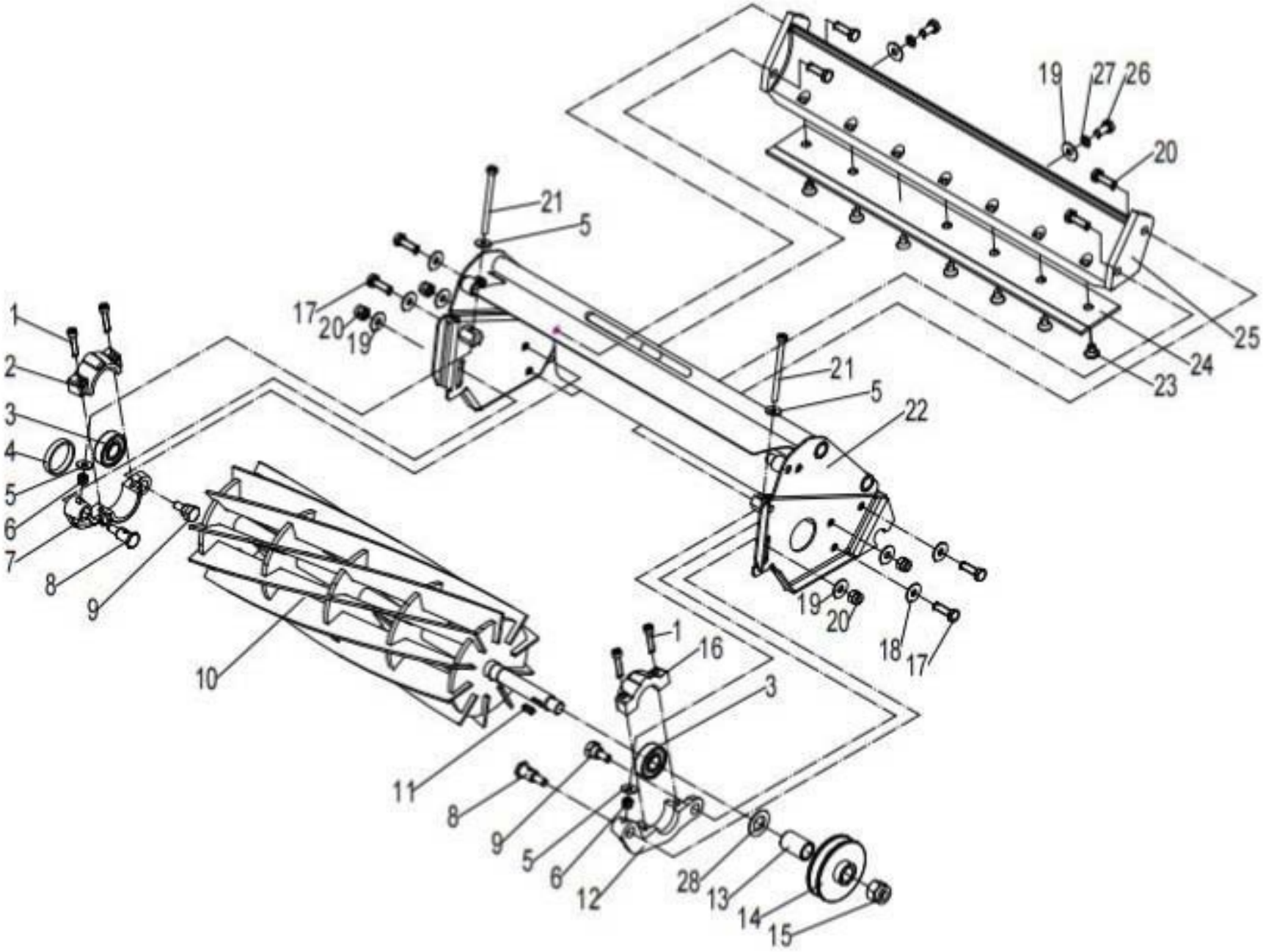

LMC10B17 10 Blade Cartridge (Optional) Parts List

Item	Part Number	Description	Qty
1	LM7240622	Hexagon socket head screw M6×30	4
2	LM4070810	Right bearing housing (upper)	1
3	LM7061237	Deep groove ball bearing 6203Z-NSK	2
4	LM4163490	Spacer	1
5	LM7030604	Washer - A 6	4
6	LM7020615A	Hex lock nut M6-LH	2
7	LM4070820	Right bearing housing (lower)	1
8	LM1070290	Bolt(with holes)	2
9	LM1070280	Bolt	2
10	LM3012080	17" cutting cylinder (10 blades)	1
11	LM7110501	Key-A 5×5×16	1
12	LM4070800	Left bearing housing (lower)	1
13	LM4034702	Pulley spacer	1
14	LM1042023	Drive pulley	1
15	LM7021407A	Hex lock nut M14	1
16	LM4070790	Left bearing housing (upper)	1
17	LM7020803	Hex lock nut M8	8
18	LM7030819	Flat Washer- A 8	10
19	LM7030813	Washer - A 8	4
20	LM7290612	Slotted cylindrical head screw M6×80-L	2
21	LM4034922A-9005	Bracket (17")	1
22	LM7290881	Screw-M8×12-A2-70	6
23	LM3011102	Thin bed knife（17"）	1
24	LM4034921-9005	Bed knife holder（17"）	1
25	LM7010821	Hex head bolt - full thread M8×25	4
26	LM7240809	Hexagon socket head screw M8×16	2
27	LM7040802	Spring washer 8	2
28	LM4165803	Spacer sleeve	1

LMCVC17 Vertical Cartridge (Optional) Parts List

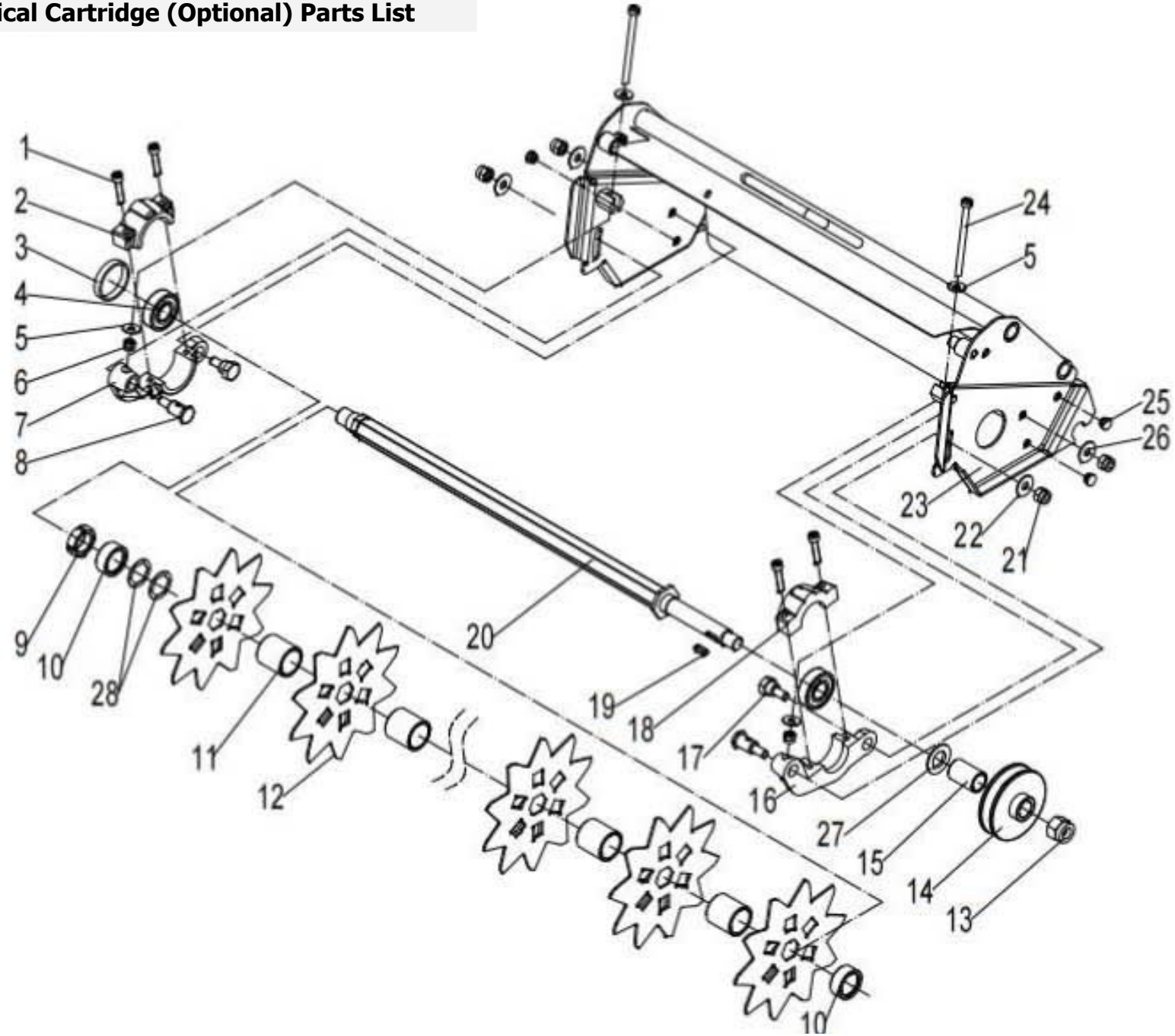

LMCVC17 Vertical Cartridge (Optional) Parts List

Item	Part Number	Description	Qty
1	LM7240622	Hexagon socket head screw M6×30	4
2	LM4070810	Right bearing housing (upper)	1
3	LM4163490	Spacer	1
4	LM7061237	Deep groove ball bearing 6203Z-NSK	2
5	LM7030604	Washer - A 6	4
6	LM7020615A	Hex lock nut M6-LH	2
7	LM4070820	Right bearing housing (lower)	1
8	LM1070290	Bolt (with holes)	2
9	LM3012085	Lock nut	1
10	LM4034934	Lock spacer	2
11	LM4034929	Spacer bush 32.3mm	12
12	LM3011059	Verticut blade	13
13	LM7021407A	Hex lock nut M14	1
14	LM1042023	Drive pulley	1
15	LM4034702	Pulley spacer	1
16	LM4070800	Left bearing housing (lower)	1
17	LM1070280	Bolt	2
18	LM4070790	Left bearing housing (upper)	1
19	LM7110501	Key-A 5×5×16	1
20	LM4034925	Blade shaft (17″)	1
21	LM7020803	Hex lock nut M8	4
22	LM7030813	Washer - A 8	2
23	LM4034922B-9005	Bracket (17″)	1
24	LM7290612	Slotted cylindrical head screw M6×80-L	2
25	LM7150153	Plug	4
26	LM7030819	Flat Washer- A 8	4
27	LM4165803	Spacer sleeve	1
28	LM4034935	Adjustment pad	as re-

LMCDC17 De-thatcher Cartridge (Optional) Parts List

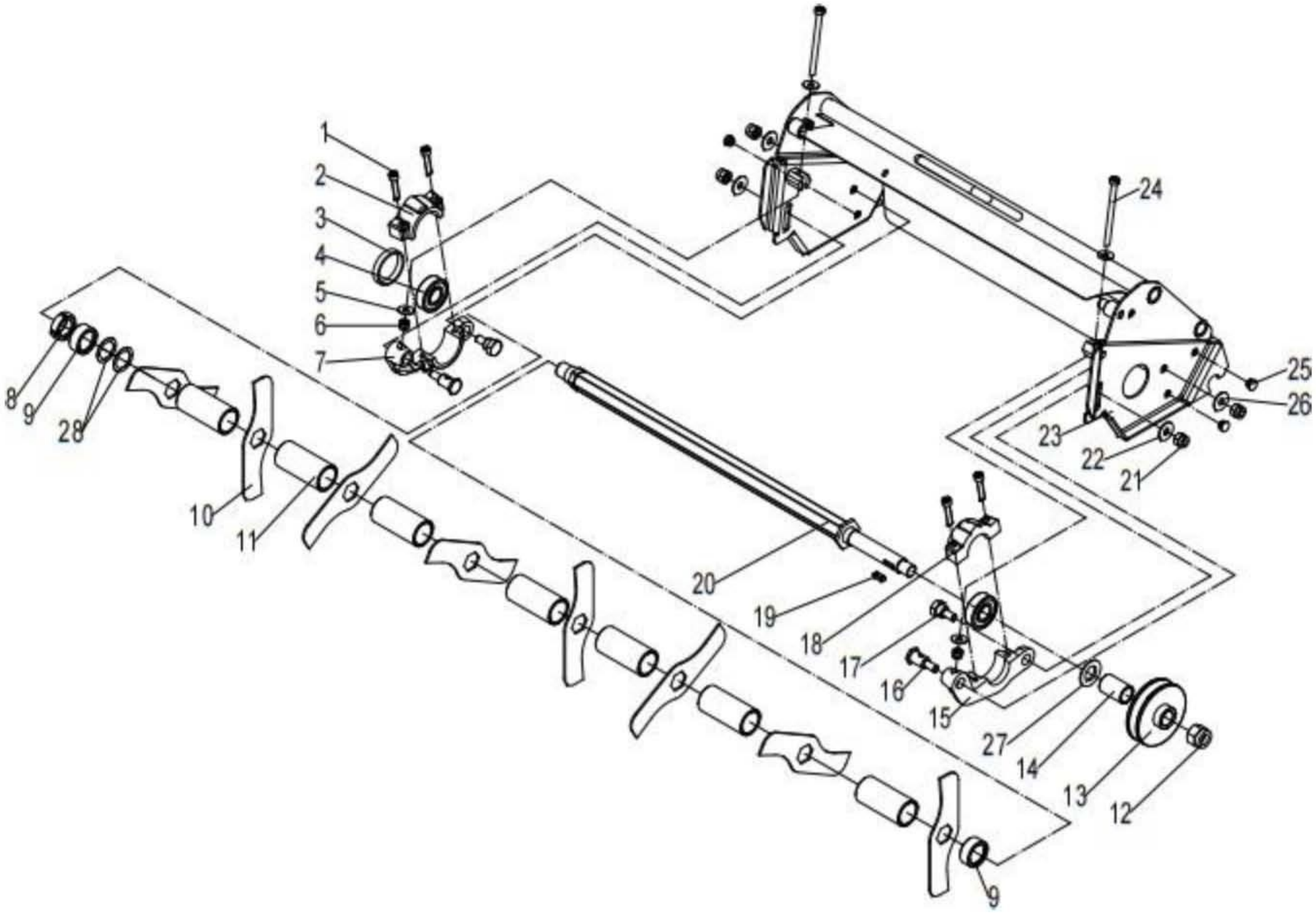

LMCDC17 De-thatcher Cartridge (Optional) Parts List

Item	Part Number	Description	Qty
1	LM7240622	Hexagon socket head screw M6×30	4
2	LM4070810	Right bearing housing (upper)	1
3	LM4163490	Spacer	1
4	LM7061237	Deep groove ball bearing 6203Z-NSK	2
5	LM7030604	Washer - A 6	4
6	LM7020615A	Hex lock nut M6-LH	2
7	LM4070820	Right bearing housing (lower)	1
8	LM3012085	Arbor lock nut	1
9	LM4034934	Cutter shaft lock spacer 2mm	1
10	LM3011058	De-thatcher Blade	7
11	LM4034928	Blade spacer 67mm	6
12	LM7021407A	Hex lock nut M14	1
13	LM1042023	Drive pulley	1
14	LM4034702	Pulley spacer	1
15	LM4070800	Left bearing housing (lower)	1
16	LM1070290	Bolt (with holes)	2
17	LM1070280	Bolt	2
18	LM4070790	Left bearing housing (upper)	1
19	LM7110501	Key-A 5×5×16	1
20	LM4034925	Cutter shaft (17")	1
21	LM7020803	Hex lock nut M8	4
22	LM7030813	Washer - A 8	2
23	LM4034922B-9005	Bracket (17")	1
24	LM7290612	Slotted cylindrical head screw M6×80-L	2
25	LM7150153	Plug	4
26	LM7030819	Flat Washer- A 8	2
27	LM4165803	Spacer sleeve	1
28	LM4034935	Adjustment pad	as re-

LMCSC17 Scarifier Cartridge (Optional) Parts List

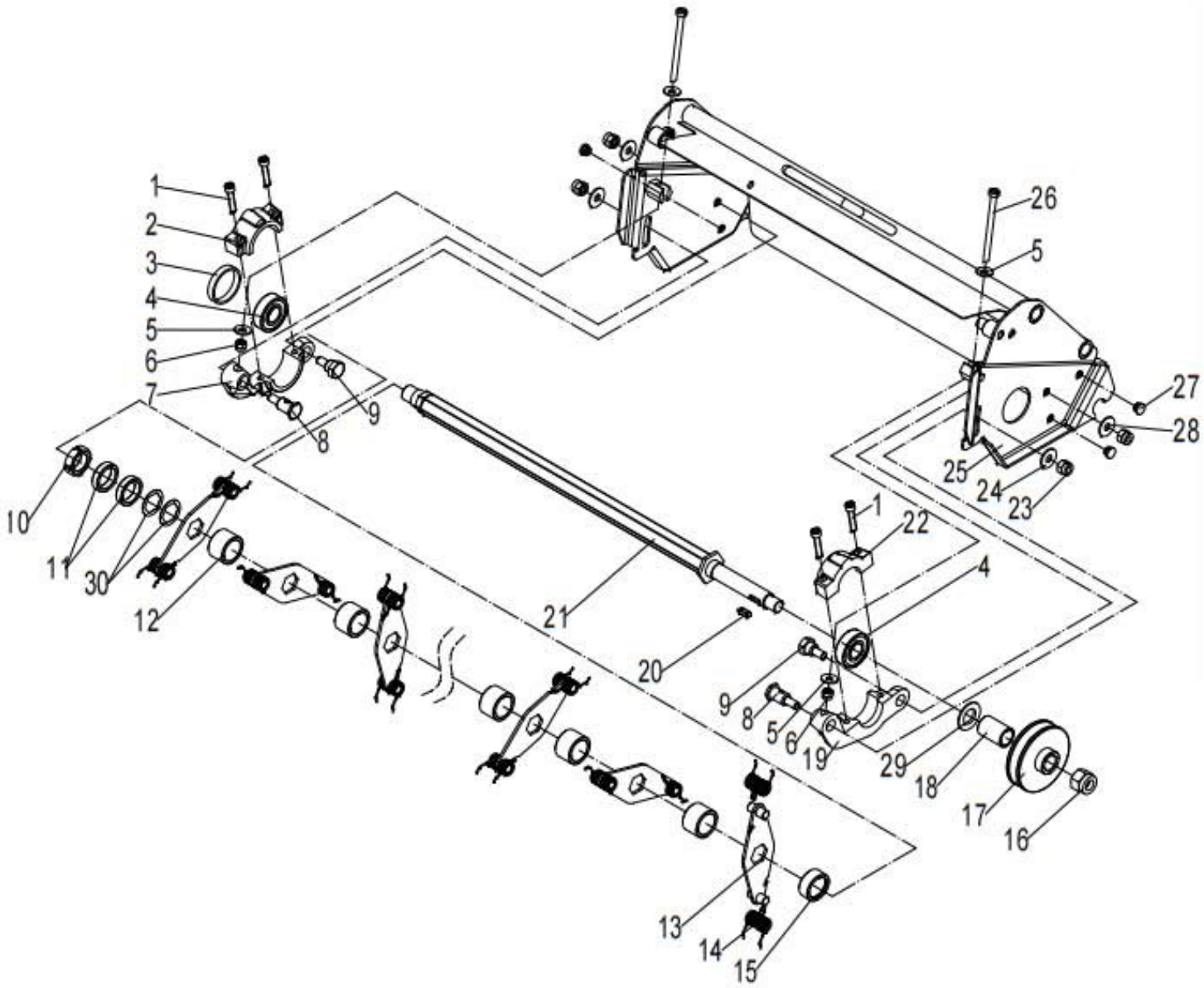

LMCSC17 Scarifier Cartridge (Optional) Parts List

Item	Part Number	Description	Qty
1	LM7240622	Hexagon socket head screw M6×30	4
2	LM4070810	Right bearing housing (upper)	1
3	LM4163490	Spacer	1
4	LM7061237	Deep groove ball bearing 6203Z-NSK	2
5	LM7030604	Washer - A 6	4
6	LM7020615A	Hex lock nut M6-LH	2
7	LM4070820	Right bearing housing (lower)	1
8	LM1070290	Bolt (with holes)	2
9	LM1070280	Bolt	2
10	LM3012085	Arbor lock nut	1
11	LM4034934	Cutter shaft lock spacer	2
12	LM4034926	Spacer bush 20.7mm	17
13	LM4034924-9005	Scarifier head kit	18
14	LM3011053	Scarifier blade	36
15	LM4034927	Spacer bush 7.7mm	1
16	LM7021407A	Hex lock nut M14	1
17	LM1042023	Drive pulley	1
18	LM4034702	Pulley spacer	1
19	LM4070800	Left bearing housing (lower)	1
20	LM7110501	Key-A 5×5×16	1
21	LM4034925	Cutter shaft (17″)	1
22	LM4070790	Left bearing housing (upper)	1
23	LM7020803	Hex lock nut M8	4
24	LM7030813	Washer - A 8	2
25	LM4034922B-9005	Bracket (17″)	1
26	LM7290612	Slotted cylindrical head screw M6×80-L	2
27	LM7150153	Plug	4
28	LM7030819	Flat Washer- A 8	2
29	LM4165803	Spacer sleeve	1
30	LM4034935	Adjustment pad	as re-

LMCAC17 Aerator Cartridge (Optional) Parts List

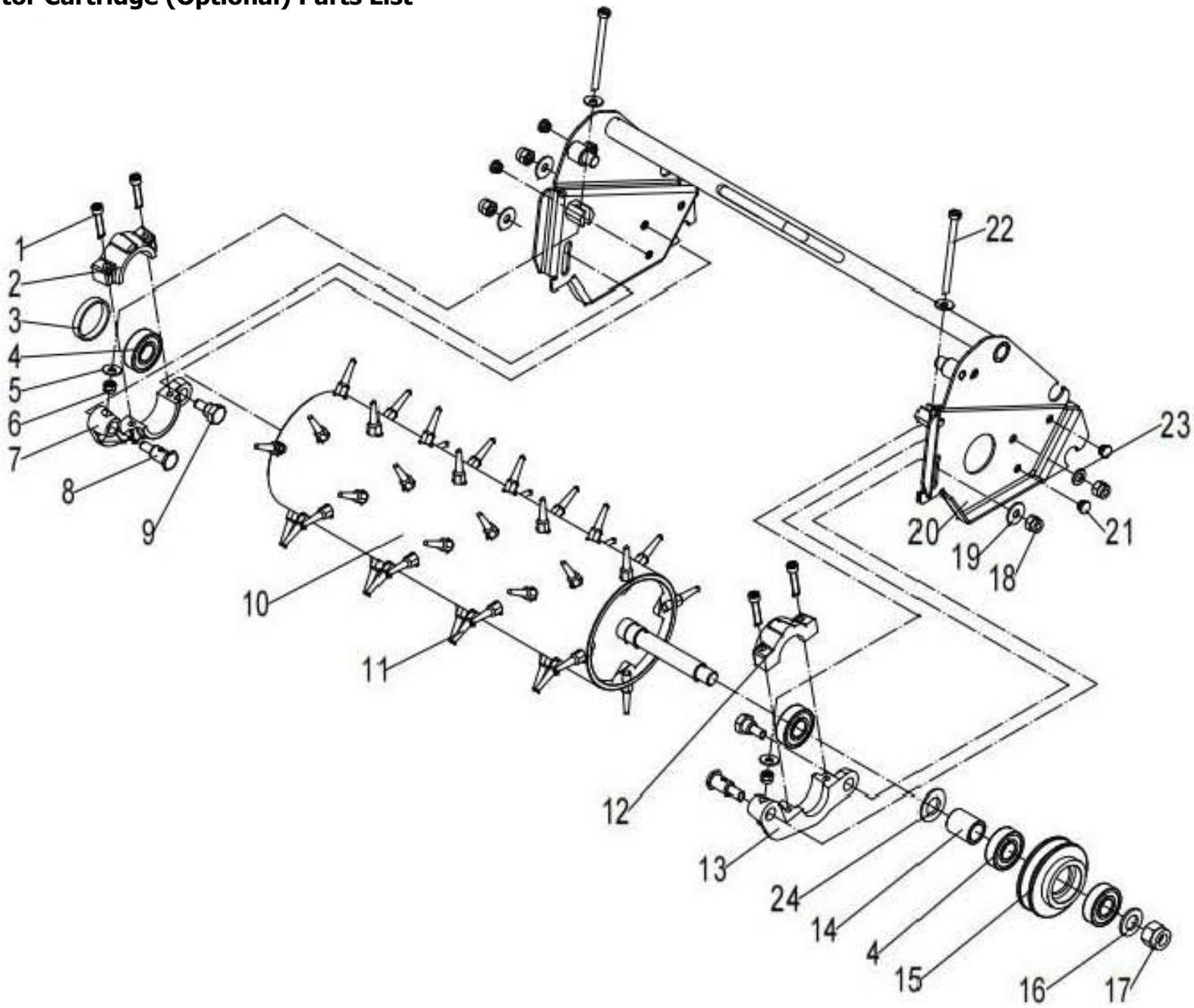

LMCAC17 Aerator Cartridge (Optional) Parts List

Item	Part Number	Description	Qty
1	LM7240622	Hexagon socket head screw M6×30	4
2	LM4070810	Right bearing housing (upper)	1
3	LM4163490	Spacer	1
4	LM7061237	Deep groove ball bearing 6203Z-NSK	4
5	LM7030604	Washer - A 6	4
6	LM7020615A	Hex lock nut M6-LH	2
7	LM4070820	Right bearing housing (lower)	1
8	LM1070290	Bolt (with holes)	2
9	LM1070280	Bolt	2
10	LM4034936	Mounted tube (17”)	1
11	LM3012065	Aerator needle	48
12	LM4070790	Left bearing housing (upper)	1
13	LM4070800	Left bearing housing (lower)	1
14	LM4034702	Spacer bush	1
15	LM1042026	Pulley	1
16	LM7031401	Washer-A 14	1
17	LM7021407A	Hex lock nut M14	1
18	LM7020803	Hex lock nut M8	4
19	LM7030813	Washer - A 8	2
20	LM4034922C-9005	Bracket (with hole)	1
21	LM7150153	Plug	4
22	LM7290612	Slotted cylindrical head screw M6×80-L	2
23	LM7030819	Flat Washer- A 8	2
24	LM4165803	Spacer sleeve	1

LMCGBC17 Lawn Brush Cartridge (Optional) Parts List

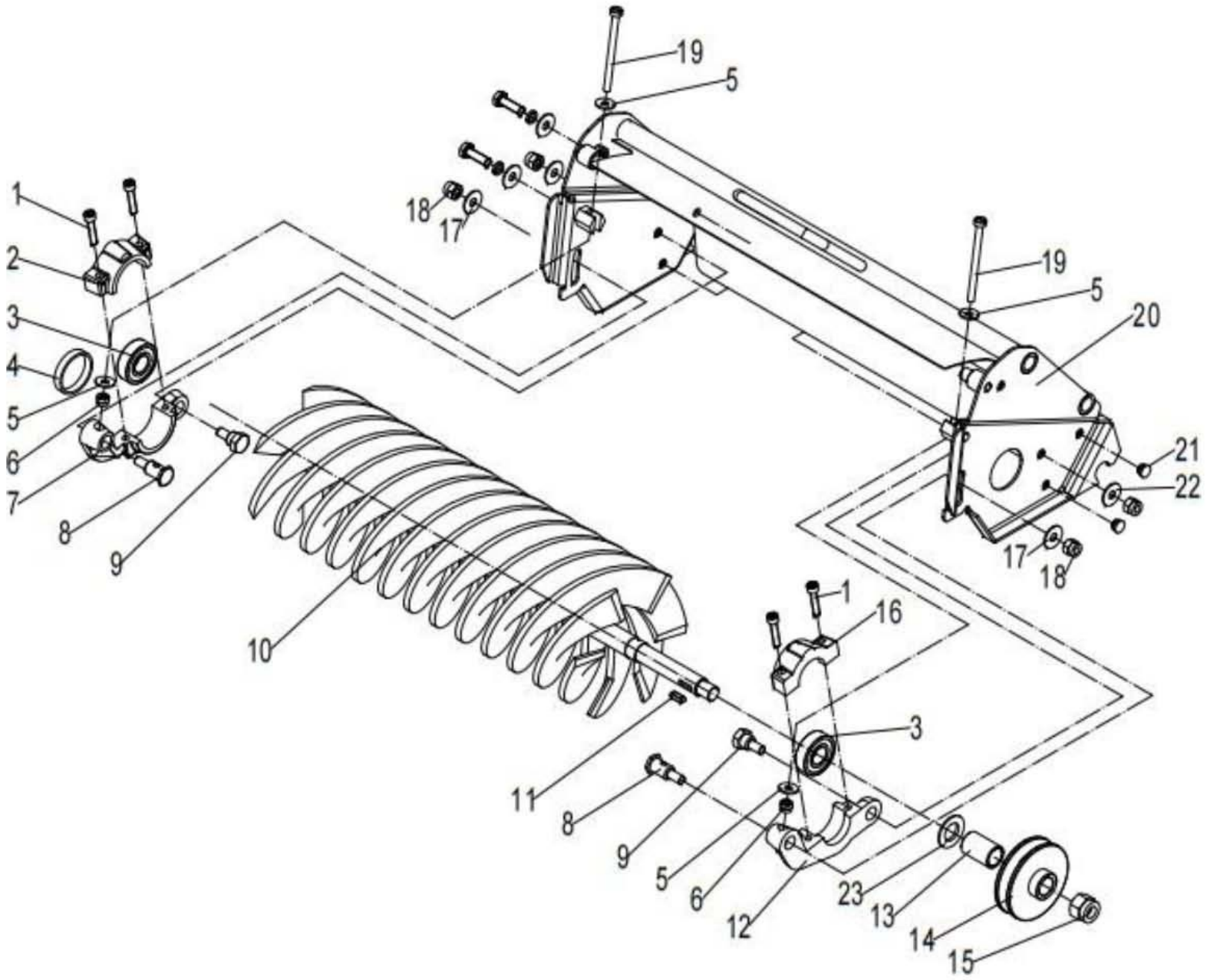

LMCGBC17 Lawn Brush Cartridge (Optional) Parts List

Item	Part Number	Description	Qty
1	LM7240622	Hexagon socket head screw M6×30	4
2	LM4070810	Right bearing housing (upper)	1
3	LM7061237	Deep groove ball bearing 6203Z-NSK	2
4	LM4163490	Spacer	1
5	LM7030604	Washer - A 6	4
6	LM7020615A	Hex lock nut M6-LH	2
7	LM4070820	Right bearing housing (lower)	1
8	LM1070290	Bolt (with holes)	2
9	LM1070280	Bolt	2
10	LM3011052	Lawn brush (17”)	1
11	LM7110501	Key-A 5×5×16	1
12	LM4070800	Left bearing housing (lower)	1
13	LM4034702	Pulley spacer	1
14	LM1042023	Drive Pulley	1
15	LM7021407A	Hex lock nut M14	1
16	LM4070790	Left bearing housing (upper)	1
17	LM7030813	Washer - A 8	2
18	LM7020803	Hex lock nut M8	4
19	LM7290612	Slotted cylindrical head screw M6×80-L	2
20	LM4034922B-9005	Bracket (17”)	1
21	LM7150153	Plug	4
22	LM7030819	Flat washer- A 8	2
23	LM4165803	Spacer sleeve	1