SECO INDUSTRIES

Model:

KAJ6P-23-0001



Model: KAJ6P-23-0001

Group: KAJ01-23-0002 Engine 16 HP CAIMAN

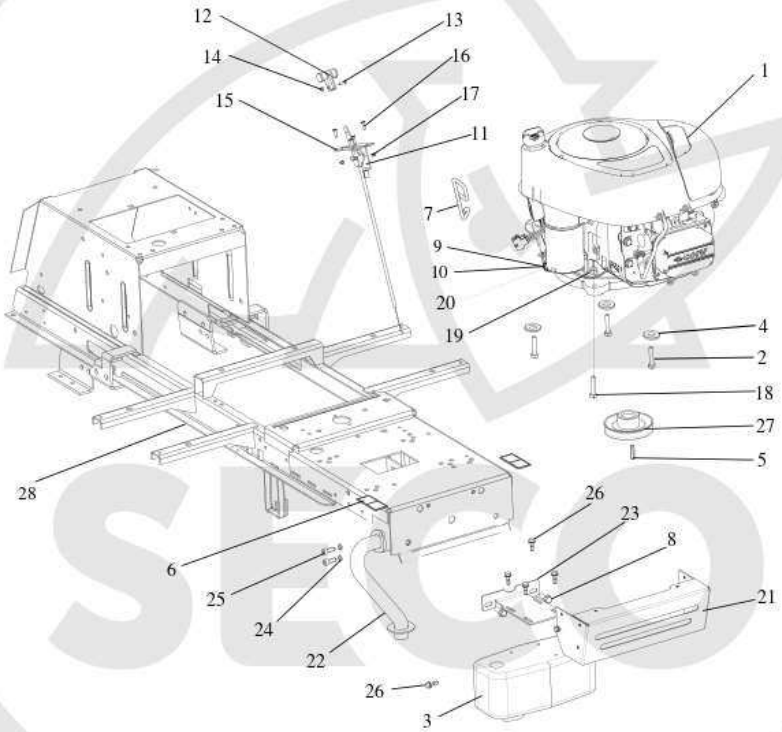

SECO
INDUSTRIES

ID	Name	Item code	No.	UOM	Price
1	Engine 16HP CAIMAN CGE	N482349032	1	KS	EUR /
2	Screw 3/8"X 1" hexagon	N309578548	3	KS	EUR /
3	Exhaust Nelson 24772 N	N443900118	1	KS	EUR /
4	Washer 10.5	N311214516	3	KS	EUR /
5	Key 0-9231-213	N311726101	1	KS	EUR /
6	Label 0-8732-337	N283292223	2	KS	EUR /
7	HOOK 0-9242-240	N532980071	1	KS	EUR /
8	Screw M 8x25 DIN 7500 D	N309578540	2	KS	EUR /
9	Hose with cap	N532151253	1	KS	EUR /
10	Reducer to engine	N532151254	1	KS	EUR /
11	Throttle lever 9-8071-225	N443900094	1	KS	EUR /
12	Throttle lever 0-8060-239	N443900138	1	KS	EUR /
13	Screw M 4X14 021131.25	N309231535	1	KS	EUR /
14	Nut M4	N311129514	1	KS	EUR /
15	Reinforcement	S532080302873	1	KS	EUR /
16	Screw M 5X16	N309251515	4	KS	EUR /
17	Nut M5	N311129515	4	KS	EUR /
18	Bolt M5x35	N309503556	1	KS	EUR /
19	Nut M 8 DIN 6926 8 Zinc	N532150290	1	KS	EUR /
20	Hose clip 9W1 16-25 EURO	N548241028	1	KS	EUR /
21	Exhaust cover AJ V1	S532085422153	1	KS	EUR /
22	Exhaust pipe 16HP AJ	S532927402123	1	KS	EUR /
23	Holder	S532113405013	1	KS	EUR /
24	Washer 8	N311214502	3	KS	EUR /
25	Screw vyf.imbus 5/16x3/4 Unc Zinc	N309579502	3	KS	EUR /
26	SCREW M 6X16 DIN 7500D BN 3326	N309578517	8	KS	EUR /
27	Engine pulley 9-3325-206 K664	N532151526	1	KS	EUR /
28	Chassis complete 92	S532912962813	1	KS	EUR /

Model: KAJ6P-23-0001

Group: KAJ03-22-0001 Front axle

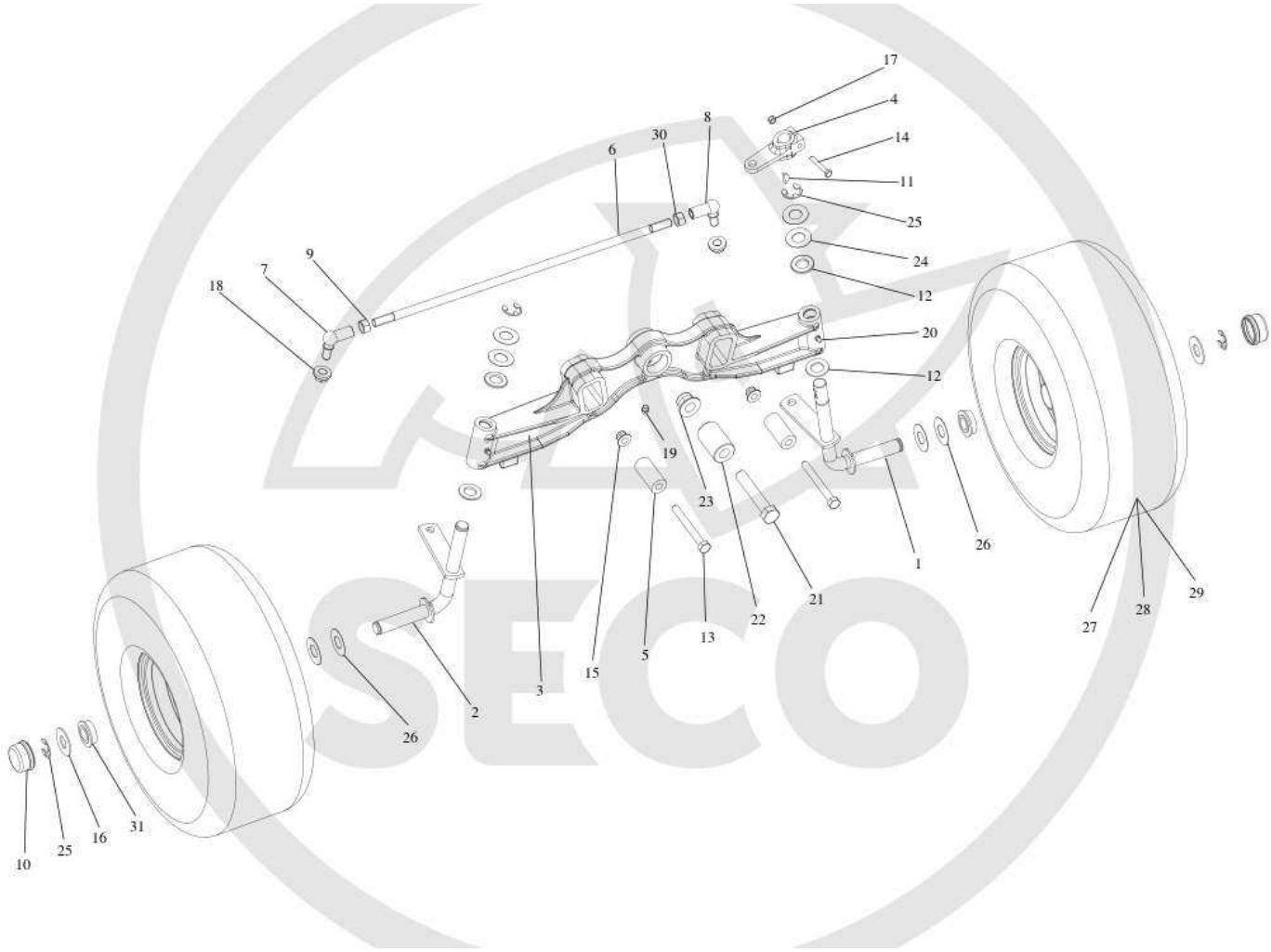

SECO
INDUSTRIES

ID	Name	Item code	No.	UOM	Price
1	Pin left	S532916432263	1	KS	EUR /
2	Pin right	S532916432273	1	KS	EUR /
3	Axle	S532016542063	1	KS	EUR /
4	Lever	S532080503603	1	KS	EUR /
5	Spacer	S532195203533	2	KS	EUR /
6	Connecting rod 0-9010-569	N532980152	1	KS	EUR /
7	Angular joint 16 R DIN71802CS M12	N442073020	1	KS	EUR /
8	Angular joint 16 L DIN71802CS M12	N442073019	1	KS	EUR /
9	Nut M12 left	N311120539	1	KS	EUR /
10	Cover 0-8025-237	N532150915	2	KS	EUR /
11	Woodruff key 5e7X7.5	N311728003	1	KS	EUR /
12	Washer 19	N311210514	4	KS	EUR /
13	Screw M 10X80	N309501527	2	KS	EUR /
14	Screw M 6X40	N309203524	1	KS	EUR /
15	Nut M 10 DIN 6926 Zinc	N311129523	2	KS	EUR /
16	Washer	S532092208363	2	KS	EUR /
17	Nut M 6	N311129513	1	KS	EUR /
18	Nut M 12 DIN 6923 8 Zinc. toothed	N311129521	2	KS	EUR /
19	Lubricating head MK 8x1	N425111016	1	KS	EUR /
20	Lubricating head MK 6x1	N425111004	2	KS	EUR /
21	Screw M 8x90	N309501524	1	KS	EUR /
22	Pin	S532093202793	1	KS	EUR /
23	Nut M 16 DIN 6926	N311129527	1	KS	EUR /
24	Washer	S532092208383	4	KS	EUR /
25	Lock ring E-75 3/4	N311732023	4	KS	EUR /
26	Washer	S532092208153	4	KS	EUR /
27	Wheel front 15x6.00-6 CHEVRON	N532940171	2	KS	EUR /
28	Wheel disc front 4.50AX6H2 OTR	N325111026	2	KS	EUR /
29	Tyre front 15x6.00-6 Chevron	N274161029	2	KS	EUR /
30	Nut M 12	N311120504	1	KS	EUR /
31	Front wheel bearing 3/4 Compensa	N324196019	4	KS	EUR /

Model: KAJ6P-23-0001

Group: KAJ05-22-0001 Steering AJ92

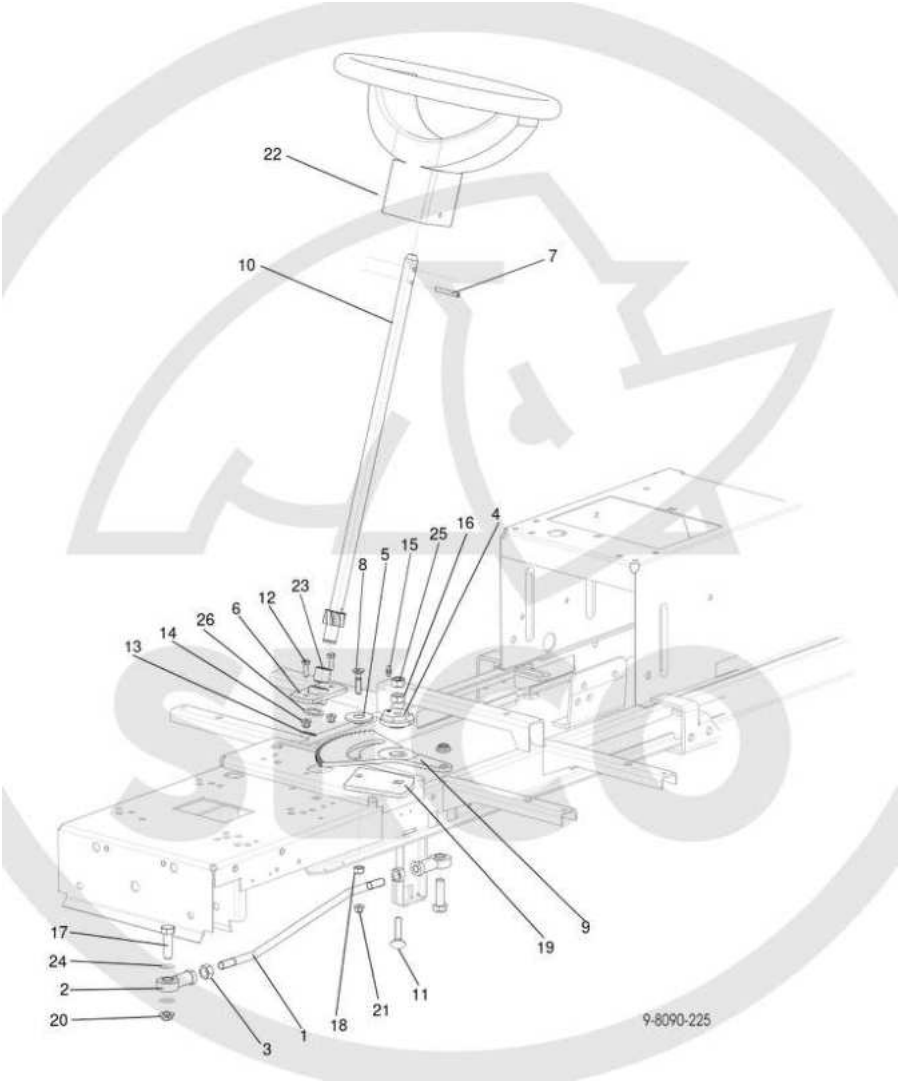

SECO
INDUSTRIES

ID	Name	Item code	No.	UOM	Price
1	Steering rod 0-8041-338	N532151347	1	KS	EUR /
2	Joint head PHS 12 CN	N442073028	2	KS	EUR /
3	Nut M 12	N311150505	2	KS	EUR /
4	Eccentric	S532080272033	1	KS	EUR /
5	Spacer	S532195202593	1	KS	EUR /
6	Bearing	S532938542093	1	KS	EUR /
7	Spring pin 6x45	N315238031	1	KS	EUR /
8	Screw M 8x35 DIN 7991 10.9 Zinc	N309578534	1	KS	EUR /
9	Toothed Segment	S532033322433	1	KS	EUR /
10	Pinion compl. AJ92	S532930252123	1	KS	EUR /
11	Screw M 12X55.8.8 A3L ISO 8677	N309019522	1	KS	EUR /
12	Screw M 6X20	N309503548	2	KS	EUR /
13	Lock ring 19	N311733607	1	KS	EUR /
14	Nut M 6 DIN 6926	N311129525	2	KS	EUR /
15	Lubricating head MK 6x1	N425111004	1	KS	EUR /
16	Nut M 12	N311150505	1	KS	EUR /
17	Screw M12X40	N309503505	2	KS	EUR /
18	Nut M 8	N311150503	1	KS	EUR /
19	WASHER	S532113326273	1	KS	EUR /
20	Nut M 12 DIN 6923 8 Zinc. toothed	N311129521	2	KS	EUR /
21	Nut M8 DIN 6923 8 Zinc. toothed	N311129520	1	KS	EUR /
22	Steering wheel Cobo 0032 0381	N443821006	1	KS	EUR /
23	Bushing 1920 KU	N323721002	1	KS	EUR /
24	Washer 12	N311214504	2	KS	EUR /
25	Nut M 12	N311129505	1	KS	EUR /
26	Washer	S532092202053	1	KS	EUR /

Model: KAJ6P-23-0001

Group: KAJ06-18-0001 Mowing lifting AJ92

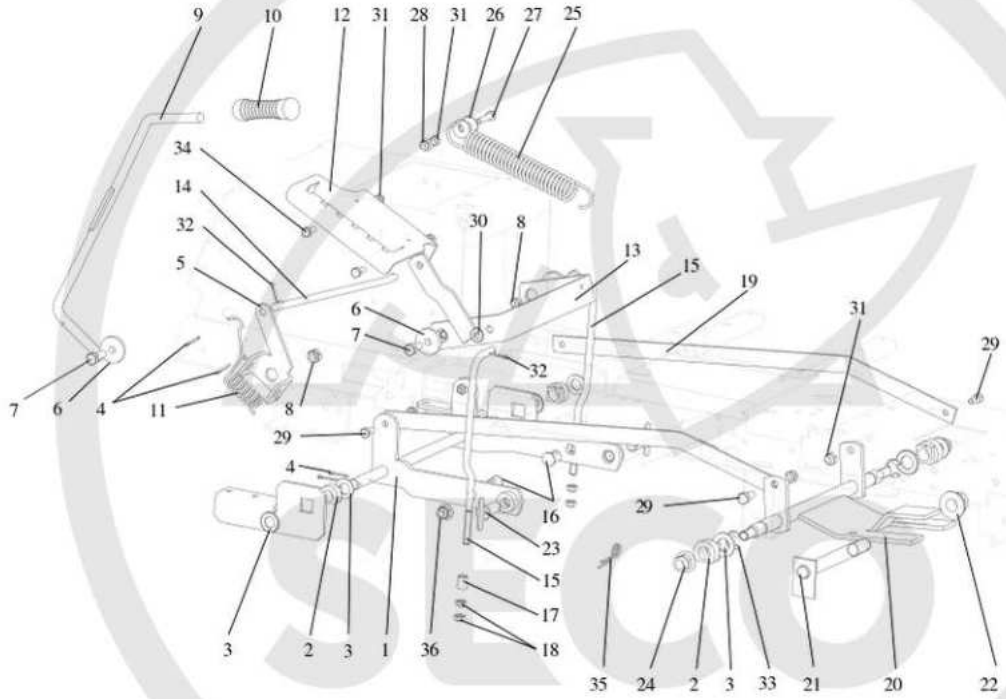

9-8091-232

SECO
INDUSTRIES

ID	Name	Item code	No.	UOM	Price
1	Lifting arms	S532980508243	1	KS	EUR /
2	Bushing 0-9462-202	N722643023	4	KS	EUR /
3	Washer 17	N311210507	6	KS	EUR /
4	Spindle 3.2x25	N311338517	6	KS	EUR /
5	Lever holder	S532113415563	1	KS	EUR /
6	WASHER	S532092212293	3	KS	EUR /
7	Screw M 10X30	N309503510	3	KS	EUR /
8	Nut M 10	N311129502	3	KS	EUR /
9	Lifting lever	S532980412173	1	KS	EUR /
10	Handrail 0-8832-202	N532151357	1	KS	EUR /
11	Spring 0-9746-504 lifting	N315231265	1	KS	EUR /
12	Lifting segment	S532113425333	1	KS	EUR /
13	Lifting holder	S532913413293	1	KS	EUR /
14	Lifting rod 0-8041-324	N532151192	1	KS	EUR /
15	Lifting rod 0-8042-265	N532151193	2	KS	EUR /
16	Pin	S532090162083	2	KS	EUR /
17	Spacer	S532095213823	2	KS	EUR /
18	Nut M 10	N311150506	4	KS	EUR /
19	Tie rod	S532080323323	2	KS	EUR /
20	Lifting arms	S532913424373	1	KS	EUR /
21	Shaft	S532938122573	1	KS	EUR /
22	Nut M 16 DIN 6926	N311129527	1	KS	EUR /
23	Pin complete	S532993462343	2	KS	EUR /
24	Nut M 12 DIN 6926	N311129526	2	KS	EUR /
25	Spring 0-9746-460	N315231193	1	KS	EUR /
26	Washer 9 Zinc	N311212517	2	KS	EUR /
27	Screw M 8X30	N309503515	1	KS	EUR /
28	Nut M 8 DIN 6926 8 Zinc	N532150290	1	KS	EUR /
29	Screw M 8X25	N309503512	4	KS	EUR /
30	Washer 10.5	N311210504	4	KS	EUR /
31	Nut M 8	N311129501	7	KS	EUR /
32	Spindle 3.2x20	N311338516	6	KS	EUR /
33	Lock ring 12	N311732009	2	KS	EUR /
34	Screw M8X20	N309503518	2	KS	EUR /
35	Flexible spindle 0-9245-999	N315238003	2	KS	EUR /
36	Nut M 10 DIN 6926 Zinc	N311129523	2	KS	EUR /

SECO INDUSTRIES

Model: KAJ6P-23-0001

Group: KAJ11-22-0002 Seat

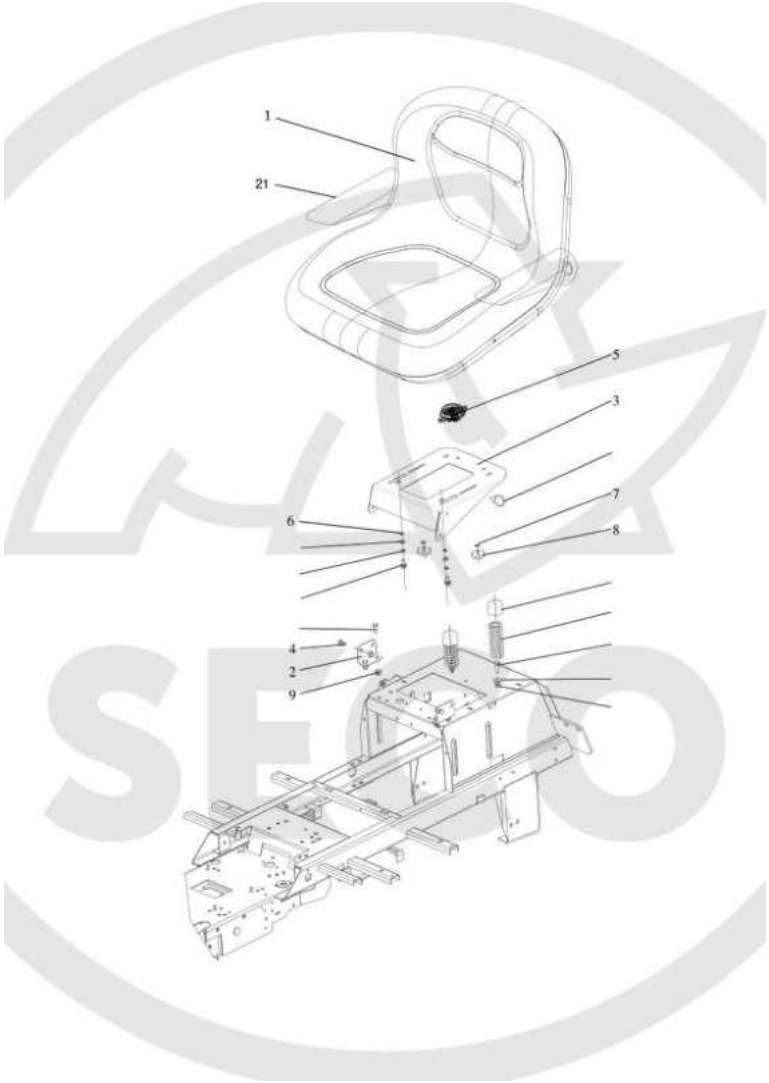

SECO
INDUSTRIES

ID	Name	Item code	No.	UOM	Price
1	Seat SP 480 Milsco	N532150988	1	KS	EUR /
2	Carrier holder	S532113402403B	2	KS	EUR /
3	Seat carrier	S532018472433	1	KS	EUR /
4	Carrier screw 0-9016-427	N309599012	2	KS	EUR /
5	Seat switch DELTA 6500-02	N532150990	1	KS	EUR /
6	Washer BN 739 8X12X2	N311219002	2	KS	EUR /
7	Washer 8.4 Zink	N311213503	2	KS	EUR /
8	Stopping nut M8x18 PR.40 black	N532150213	2	KS	EUR /
9	Nut M 8 DIN 6926 8 Zinc	N532150290	6	KS	EUR /
10	Washer 8.4	N311210503	2	KS	EUR /
11	Washer 8	N311214502	2	KS	EUR /
12	Cover 38/A PVC Black	N532150208	2	KS	EUR /
13	Screw M 8X25	N309503512	2	KS	EUR /
14	Washer 9 Zinc	N311212517	4	KS	EUR /
15	Spring 0-9746-441	N315231274	2	KS	EUR /
16	Nut M 8	N311129501	2	KS	EUR /
17	Screw M 8X25 DIN 6921 8.8 Zinc	N309578011	4	KS	EUR /
18	Clip WSBH 1-0-1	N532150211	1	KS	EUR /
19	Not used in this performance	NK00000000	1	KS	EUR /
20	Screw M 8x25 DIN 7500 D	N309578540	2	KS	EUR /
21	Arm rests C 7494 BS	N532150989	1	SD	EUR /

Model: KAJ6P-23-0001

Group: KUJ13-21-0001 Electricall installation UJ

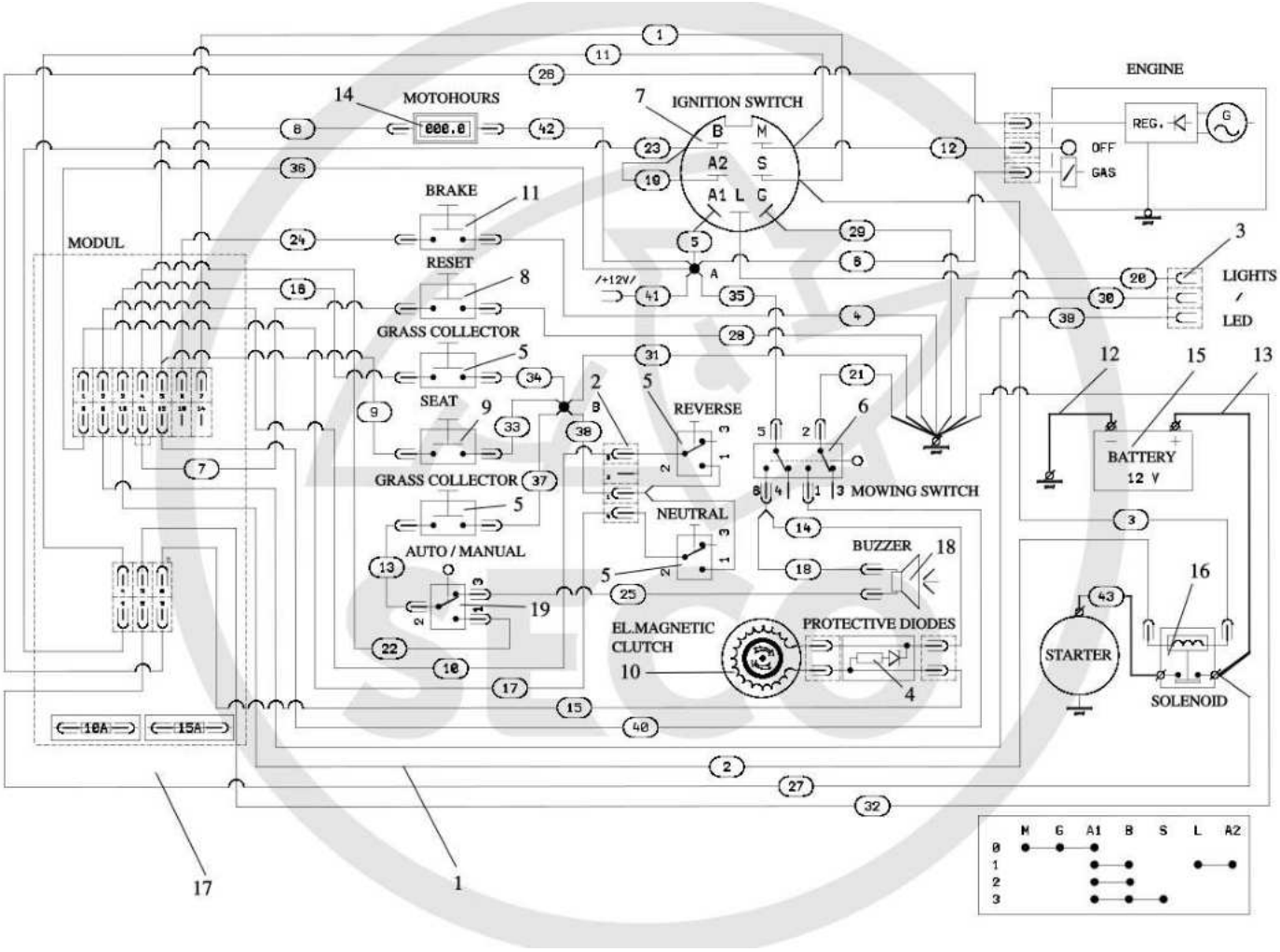

SECO
INDUSTRIES

ID	Name	Item code	No.	UOM		Price
1	Wiring harness KS 004067	N341271186	1	KS	EUR	/
2	Switches harness KS 004081	N341271193	1	KS	EUR	/
3	Lights connection KS004137 1to1	N341271222	1	KS	EUR	/
4	Protective diodes harness 9-8316-	N341271052	1	KS	EUR	/
5	Microswitch MKH 12 D 13-S1	N345359004	4	KS	EUR	/
6	Switch VDD2S001 9ZZCR 100	N345329023	1	KS	EUR	/
7	Switch box Delta 6900-47 P	N443861007	1	KS	EUR	/
8	Switch 1932.3413	N345329025	1	KS	EUR	/
9	Seat switch DELTA 6500-02	N532150990	1	KS	EUR	/
10	Elmag. clutch I-5217-38	N532151196	1	KS	EUR	/
11	Seat switch Delta 6440-04	N000532079	1	KS	EUR	/
12	Cable 9-8316-570	N341271021	1	KS	EUR	/
13	Cable 9-8316-624 solenoid+battery	N341271172	1	KS	EUR	/
14	Hour-meter SEN DEC DIGITAL	N443433003	1	KS	EUR	/
15	Battery 12V-24Ah dry,charged	N346211006	1	KS	EUR	/
16	Solenoid Trombetta 764-1221-210	N532151619	1	KS	EUR	/
17	Module KS 004062 AJ06/14	N341271187	1	KS	EUR	/
18	Buzzer PF 27 A 29 EP	N443312021	1	KS	EUR	/
19	Not used in this performance	NK00000000	1	KS	EUR	/

SECO INDUSTRIES

Model: KAJ6P-23-0001

Group: KAJ15-23-0001 Dashboard AJ

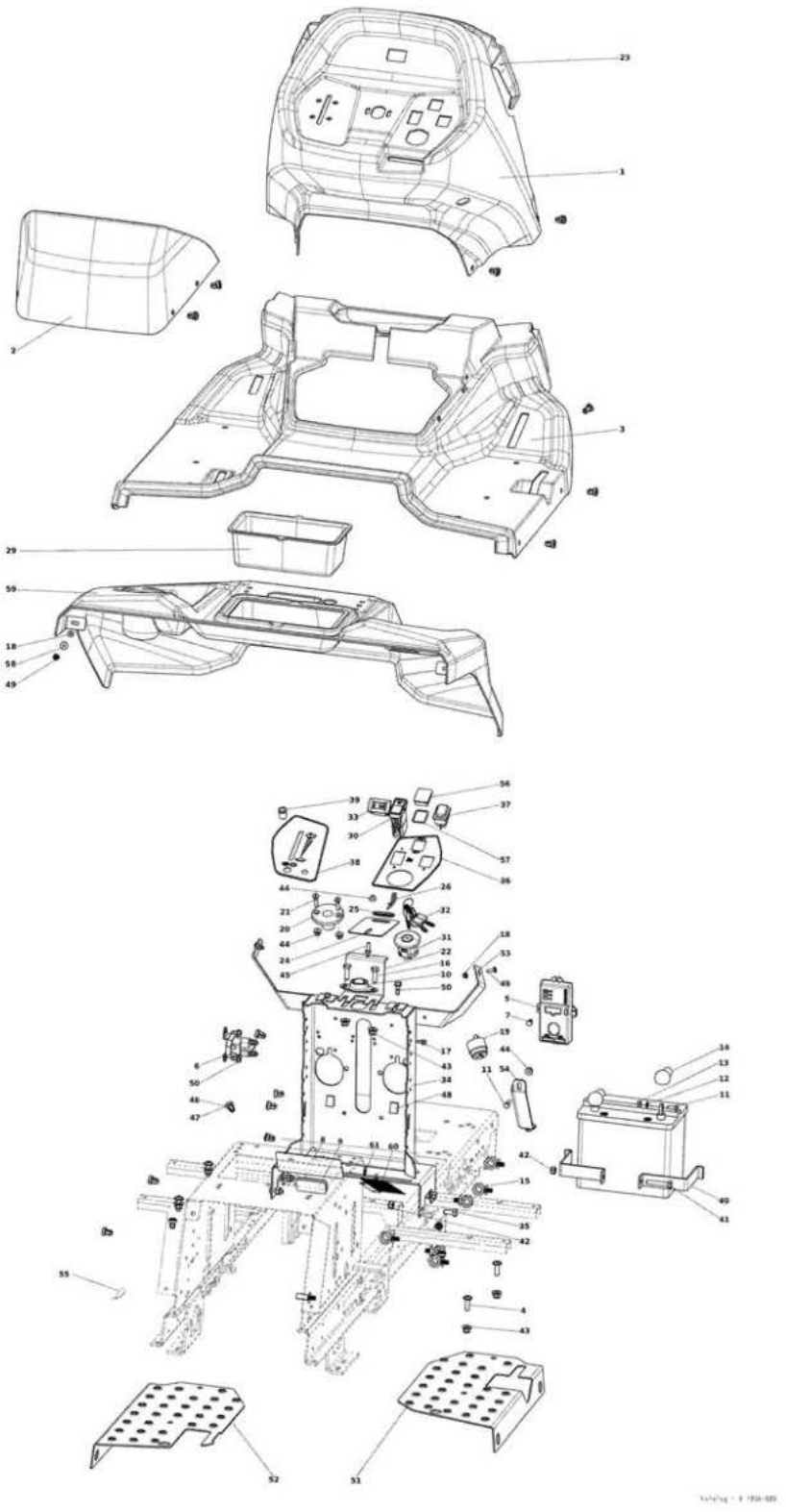

SECO
INDUSTRIES

ID	Name	Item code	No.	UOM	Price
1	Dash-board 0-8048-358 1to1 excl.	N532151838	1	KS	EUR /
2	Battery cover 0-8547-261	N532151839	1	KS	EUR /
3	Dash-board 0-8048-358 1to1 excl.	N532151840	1	KS	EUR /
4	Screw M 8x25 ISO 7380-2	N309578565	4	KS	EUR /
5	Module KS 004062 AJ06/14	N341271187	1	KS	EUR /
6	Solenoid Trombetta 764-1221-210	N532151619	1	KS	EUR /
7	Rivet 282702	N532151116	2	KS	EUR /
8	Label 0-8732-336	N283292228	1	KS	EUR /
9	Label 0-8732-220 slope 12	N283293023	1	KS	EUR /
10	Ball BEARING FL M12	N324196022	1	KS	EUR /
11	Screw M 6X20	N309503548	4	KS	EUR /
12	Washer 6.4	N311210502	2	KS	EUR /
13	Nut M 6	N311129513	2	KS	EUR /
14	Cover 273 125 020 050	N273125006	2	KS	EUR /
15	Clip WSBH 1-0-1	N532150211	9	KS	EUR /
16	Screw M 8X25	N309503512	2	KS	EUR /
17	Screw M 5x12 DIN 7500D BN3326	N309578544	1	KS	EUR /
18	Nut M 5 DIN 6926 Zinc	N311129524	4	KS	EUR /
19	Buzzer PF 27 A 29 EP	N443312021	1	KS	EUR /
20	Steering wheel bushing 0-1652-226	N321841069	1	KS	EUR /
21	Screw M 6X25 DIN7991 10.9 Zinc	N309578503	2	KS	EUR /
22	HOLDER	S532113415583	1	KS	EUR /
23	Backstop rubber 15509-8	N273192066	2	KS	EUR /
24	Holder	S532113404693	1	KS	EUR /
25	Rubber sleeve 22X2	N273121027	1	KS	EUR /
26	Flexible spindle 0-9245-233	N315238005	1	KS	EUR /
27	Blind flange BS 11/15 black	N321841082	1	KS	EUR /
28	Not used in this performance	NK00000000	1	KS	EUR /
29	Case 0-8642-236	N532151194	1	KS	EUR /
30	Switch VDD2S001 9ZZCR 100	N345329023	1	KS	EUR /
31	Switch box Delta 6900-47 P	N443861007	1	KS	EUR /
32	Starting key DELTA 688P-001	N443900137	1	SD	EUR /
33	Hour-meter SEN DEC DIGITAL	N443433003	1	KS	EUR /
34	Column	S532016422283	1	KS	EUR /
35	Screw M 8X16	N309503517	4	KS	EUR /
36	SAM. NÁL. 1-8732-938 DESIGN 2021	N283293698	1	KS	EUR /
37	Switch 1932.3413	N345329025	1	KS	EUR /
38	SAM. NÁL. 1-8732-980 DESIGN2021 L	N283293726	1	KS	EUR /
39	Light indicator KS004074	N443312023	1	KS	EUR /
40	BATTERY HOLDER	S532113425353	2	KS	EUR /
41	Screw M8x45	N309503559	1	KS	EUR /
42	Nut M 8	N311129501	5	KS	EUR /
43	Nut M 8 DIN 6926 8 Zinc	N532150290	6	KS	EUR /

SECO
INDUSTRIES

44	Nut M 6 DIN 6926	N311129525	5	KS	EUR /
45	Screw M6X16	N309503508	1	KS	EUR /
46	Seating D7-201-802-010	N532150903	8	KS	EUR /
47	Pin D7-201-711-010	N532150904	8	KS	EUR /
48	Blind flange G 20X15 (europlast)	N321841093	2	KS	EUR /
49	Screw M 5x16 ISO 7380 8.8	N309578532	4	KS	EUR /
50	Screw M 6x12 DIN 7500 BN 3326	N309578546	4	KS	EUR /
51	Footboard reinforcement R 2021	S532015402233	1	KS	EUR /
52	Footboard reinforcement L 2021	S532015402243	1	KS	EUR /
53	Dashboard holder design 2021	S532113422323	1	KS	EUR /
54	Column holder	S532113422193	1	KS	EUR /
55	Tie RT 360 /L=150/	N532150207	4	KS	EUR /
56	Blind flange VL 35X25X1-3 black	N321841085	1	KS	EUR /
57	Ring 26x2	N273111038	1	KS	EUR /
58	Washer 5.3	N311212511	2	KS	EUR /
59	Double fender 9-1847-326 1to1	N532151841	1	KS	EUR /
60	Brush cover 9-9636-204	N616100016	1	KS	EUR /
61	Rivet slide-in PH4 D 6.5	N532151003	2	KS	EUR /

Model: KAJ6P-23-0001

Group: KAJ16-23-0003 Grasscollector AJ

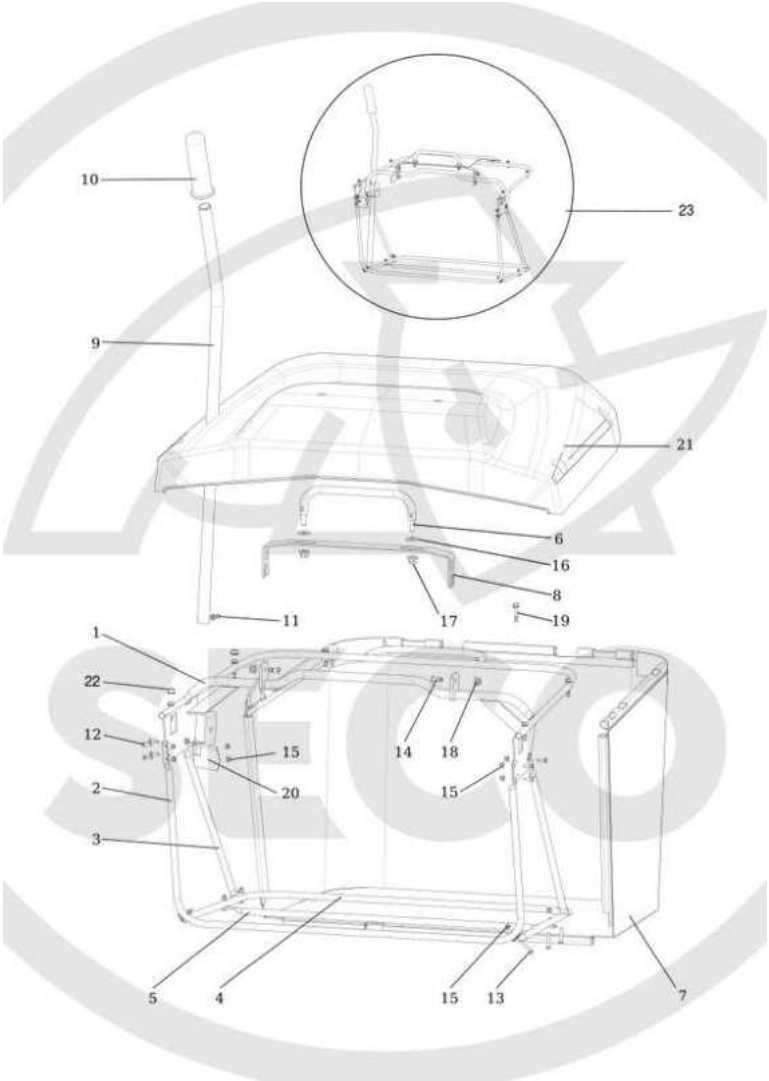

SECO
INDUSTRIES

ID	Name	Item code	No.	UOM	Price
1	Frame upper	S532974472693	1	KS	EUR /
2	Front pipe	S532074442233	1	KS	EUR /
3	Strut	S532074262133	2	KS	EUR /
4	Lower pipe	S532074442253	1	KS	EUR /
5	Connecting tube	S532074262013	1	KS	EUR /
6	Handle compl.	S532913463253	1	KS	EUR /
7	Grass Bag 9-7432-202	N532150135	1	KS	EUR /
8	Reinforcement	S532015408483	1	KS	EUR /
9	Lever Dumping	S532074202013	1	KS	EUR /
10	Handle MOSS 10189	N532151120	1	KS	EUR /
11	Screw M 6x10 DIN 7500 D	N309578545	1	KS	EUR /
12	Screw M 5X16	N309203539	8	KS	EUR /
13	Bolt M 5X25	N309203557	6	KS	EUR /
14	Screw M 8X20 BN 1206	N309578535	2	KS	EUR /
15	Nut M 5 DIN 6926 Zinc	N311129524	14	KS	EUR /
16	Washer 11 black	N311212040	2	KS	EUR /
17	Nut M 10 DIN 6926 Zinc	N311129523	2	KS	EUR /
18	Nut M 8 DIN 6926 8 Zinc	N532150290	2	KS	EUR /
19	Screw ST 6.3X32 DIN 7504 K	N309315013	6	KS	EUR /
20	Grass box-spring Snapper	S532097402233	1	KS	EUR /
21	VÍKO 0-7447-311 DESIGN 2021	N532151870	1	KS	EUR /
22	Cap 035 0612 220 03 Dual	N532151425	6	KS	EUR /
23	BAL. Č.2-232 ZÁSOBNÍK TRÁVY AJ/MJ	S532986022323	1	KS	EUR /

Model: KAJ6P-23-0001

Group: KAJ17-23-0001 Grassbox plate + tunnel AJ

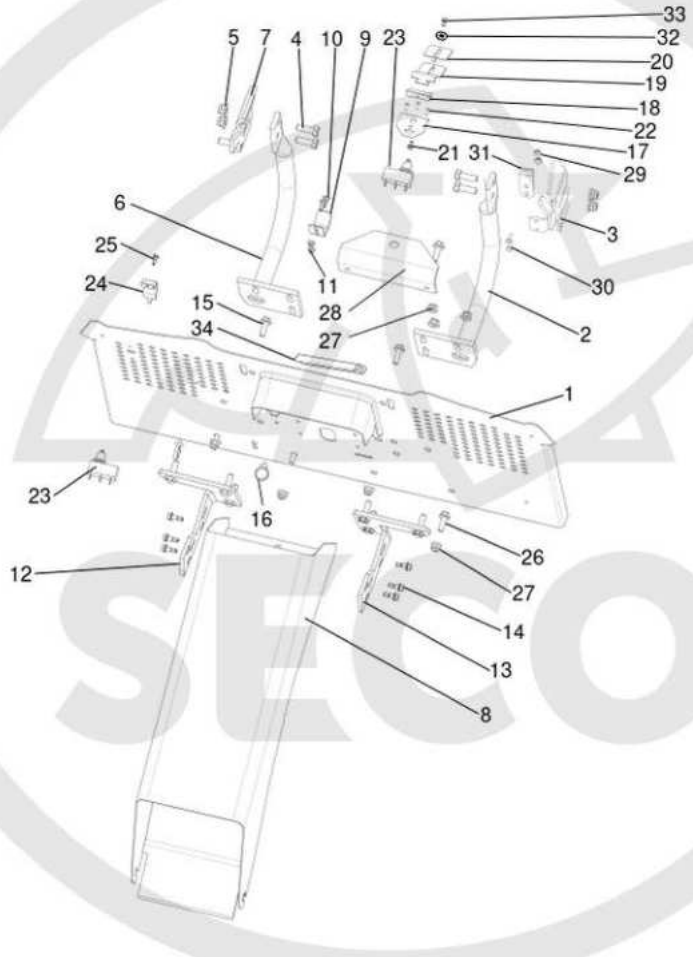

SECO
INDUSTRIES

ID	Name	Item code	No.	UOM	Price
1	Grass-box plate compl. design2021	S532974422513	1	KS	EUR /
2	Left holder AJ92	S532974432483	1	KS	EUR /
3	Holder left UJ	S532913362033	1	KS	EUR /
4	Screw M 10X30	N309503510	4	KS	EUR /
5	Nut M 10 DIN 6926 Zinc	N311129523	4	KS	EUR /
6	Right holder AJ92	S532974432463	1	KS	EUR /
7	Holder right UJ	S532913362043	1	KS	EUR /
8	Tunnel AJ92	S532974472703	1	KS	EUR /
9	Spring	S532097464993	1	KS	EUR /
10	Screw M 5X16 Zinc	N309019514	2	KS	EUR /
11	Nut M 5 DIN 6923 8 Zn toothed	N311129532	2	KS	EUR /
12	Board holder left	S532913402043	1	KS	EUR /
13	Board holder right	S532913402033	1	KS	EUR /
14	SCREW M 6X16 DIN 7500D BN 3326	N309578517	6	KS	EUR /
15	Screw M8x25 DIN 6921 with teeth	N309578555	2	KS	EUR /
16	Clip WSBH 1-0-1	N532150211	3	KS	EUR /
17	Plug plate	S532114302043	1	KS	EUR /
18	Holder	S532113408353	1	KS	EUR /
19	Plug plate	S532014417343	1	KS	EUR /
20	Plug plate	S532014417353	1	KS	EUR /
21	Screw M 6x10 KL 100 RIPP Zinc	N309503579	1	KS	EUR /
22	Screw M 6x10 DIN 7500 D	N309578545	3	KS	EUR /
23	Microswitch MKH 12 D 13-S1	N345359004	2	KS	EUR /
24	Switch cover	S532085415813	1	KS	EUR /
25	Screw M 5x12 DIN 7500D BN3326	N309578544	1	KS	EUR /
26	Screw M 8X25 DIN 6921 8.8 Zinc	N309578011	4	KS	EUR /
27	Nut M 8 DIN 6926 8 Zinc	N532150290	10	KS	EUR /
28	Tow hitch	S532113402453	1	KS	EUR /
29	Nut M 5 DIN 6926 Zinc	N311129524	2	KS	EUR /
30	Screw M 5X16	N309203539	2	KS	EUR /
31	Spring	S532097452243	1	KS	EUR /
32	Control head 0-8060-201	N532151790	1	KS	EUR /
33	Screw M6X16	N309503508	1	KS	EUR /
34	Edging with steel fibre 22-6784-1	N273232022	0	M	EUR /

Model: KAJ6P-23-0001

Group: KAJ18-22-0002 Drive and brace control

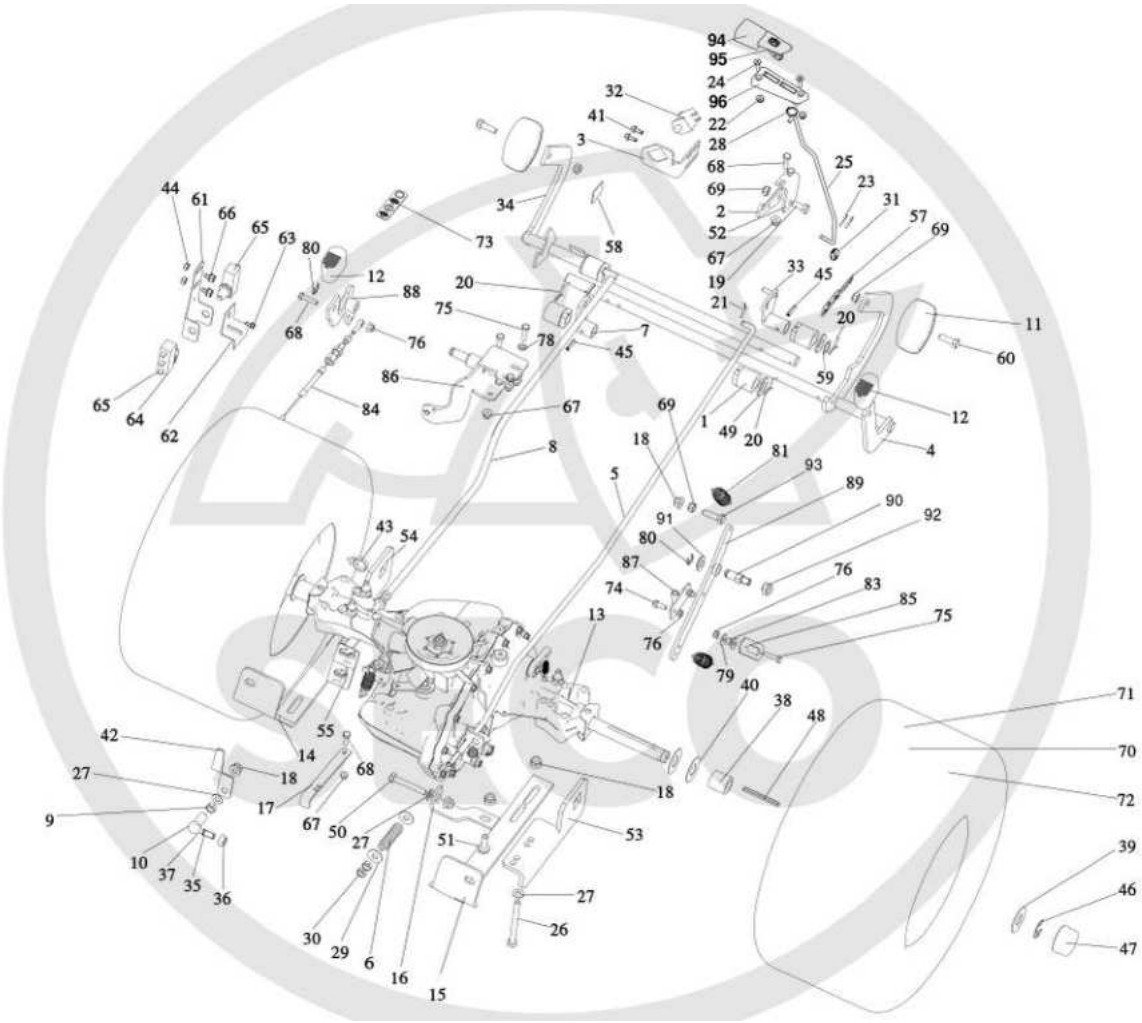

SECO
INDUSTRIES

ID	Name	Item code	No.	UOM	Price
1	Case 0-9462-203	N722643024	4	KS	EUR /
2	Latch	S532037322233	1	KS	EUR /
3	Switch holder	S532113402293	1	KS	EUR /
4	Travel lever	S532980442613	1	KS	EUR /
5	Brake rod 0-8042-209 T3/AJ	N532151720	1	KS	EUR /
6	Spring TLZ 250.150.0530 Zinc	N315231240	1	KS	EUR /
7	Arm complete	S532980364823	1	KS	EUR /
8	Travel tie-rod	S532980422383	1	KS	EUR /
9	Nut M 8	N311150503	1	KS	EUR /
10	Ball bushing 13 DIN71805B Zinc	N442073016	1	KS	EUR /
11	Foot pedal plastic 0-8051-202	N532151568	2	KS	EUR /
12	Pedal cover 0-8832-234	N273151013	2	KS	EUR /
13	PŘEVODOVKA HYDRO GEAR T3A S UZÁVĚ	N532991067	1	KS	EUR /
14	LEFT HOLDER	S532113408273	1	KS	EUR /
15	RIGHT HOLDER	S532113408263	1	KS	EUR /
16	Gearbox holder	S532113425343	1	KS	EUR /
17	BYPASS ROD	S532080403183	1	KS	EUR /
18	Nut M 8 DIN 6926 8 Zinc	N532150290	8	KS	EUR /
19	Screw M8X20	N309503518	1	KS	EUR /
20	Spindle 3.2x25	N311338517	4	KS	EUR /
21	Spindle 3.2x20	N311338516	1	KS	EUR /
22	Nut M 5 DIN 6926 Zinc	N311129524	2	KS	EUR /
23	Spindle 1.6x12	N311338513	2	KS	EUR /
24	Screw M 5x25 DIN7991 10.9 Zinc	N309578510	2	KS	EUR /
25	Parking brake control rod 9-8042-	N532151846	1	KS	EUR /
26	Screw M 8x85	N309501573	4	KS	EUR /
27	Washer 8.4	N311210503	6	KS	EUR /
28	Lock ring 14	N311733004	1	KS	EUR /
29	Washer 9 Zinc	N311212517	2	KS	EUR /
30	Nut M 8	N311120520	2	KS	EUR /
31	Washer 5.3	N311210501	2	KS	EUR /
32	Seat switch Delta 6440-04	N000532079	1	KS	EUR /
33	Foot complete	S532980365393	1	KS	EUR /
34	Brake pedal	S532980442583	1	KS	EUR /
35	Spherical pin 13 DIN 71803 C Zinc	N442073017	1	KS	EUR /
36	Nut M8 DIN 6923 8 Zinc. toothed	N311129520	1	KS	EUR /
37	Safety U-strap 13 DIN 71805 S Zin	N442073018	1	KS	EUR /
38	Spacer	S532195203773	2	KS	EUR /
39	Washer	S532092208363	6	KS	EUR /
40	Washer	S532092208153	10	KS	EUR /
41	Screw M 5x12 DIN 7500D BN3326	N309578544	2	KS	EUR /
42	Reset spring	S532097412053	1	KS	EUR /
43	Clip WSBH 1-0-1	N532150211	1	KS	EUR /

SECO
INDUSTRIES

44	Nut M6	N311150504	2	KS	EUR /
45	Spring pin 5x22 ISO 8748	N315238058	2	KS	EUR /
46	Lock ring E-75 3/4	N311732023	2	KS	EUR /
47	Cover 0-8025-237	N532150915	2	KS	EUR /
48	Key 0-9231-216	N311726099	2	KS	EUR /
49	Washer 17	N311210507	2	KS	EUR /
50	Bolt M5x35	N309503556	1	KS	EUR /
51	Screw M 8X25 DIN 6921 8.8 Zinc	N309578011	1	KS	EUR /
52	Ratchet holder	S532113408283	1	KS	EUR /
53	Right lift holder	S532113408303	1	KS	EUR /
54	Left lift holder	S532113408293	1	KS	EUR /
55	Label 0-8732-523	N283292414	1	KS	EUR /
56	Not used in this performance	NK00000000	1	KS	EUR /
57	Label 0-8732-444	N283292327	1	KS	EUR /
58	Label 1-8732-363 Brake	N283293029	1	KS	EUR /
59	Washer 16X22X1 DIN 988 L 07	N311219496	2	KS	EUR /
60	Screw M 8X20	N309543506	2	KS	EUR /
61	Switch holder UJ	S532014402173	1	KS	EUR /
62	Neutral-switch cover	S532014412013	1	KS	EUR /
63	Screw M 4X8 D 7500 D	N309578507	1	KS	EUR /
64	Switches harness KS 004081	N341271193	1	KS	EUR /
65	Microswitch MKH 12 D 13-S1	N345359004	2	KS	EUR /
66	Screw M 6x10 DIN 7500 D	N309578545	2	KS	EUR /
67	Nut M 6 DIN 6926	N311129525	8	KS	EUR /
68	Screw M 6X20	N309503548	4	KS	EUR /
69	Nut M 8	N311129501	4	KS	EUR /
70	Wheel rear 18x8.50-8 CHEVRON	N532940172	2	KS	EUR /
71	Wheel disc 7.00IX8H2 OTR 202180	N325111023	2	KS	EUR /
72	Tyre rear 18x8.50-8 CHEVRON	N274161030	2	KS	EUR /
73	Label 1-8732-401 diff-lock UJ	N283293164	1	KS	EUR /
74	Screw M6X16	N309503508	6	KS	EUR /
75	Screw M 6X25	N309503551	6	KS	EUR /
76	Nut M 6	N311129513	5	KS	EUR /
78	Washer 6.4	N311210502	2	KS	EUR /
79	Washer 6.6 Zinc	N311212516	2	KS	EUR /
80	SAFETY RING 9	N311732003	2	KS	EUR /
81	PRUŽINA 0-9746-209	N315231277	2	KS	EUR /
82	Not used in this performance	NK00000000	1	KS	EUR /
83	POUZDRO 6.2X10X5 005490000002	N321841099	1	KS	EUR /
84	Cable, diff-lock 9-8074-209	N443900159	1	KS	EUR /
85	PATKA MJ/T3 S UZÁVĚRKOU	S532114322123	1	KS	EUR /
86	DRŽÁK ÚPLNÝ UZÁV. T3	S532913302023	1	KS	EUR /
87	DRŽÁK BOWDENU T3	S532913462213	1	KS	EUR /
88	PEDÁL UZÁVĚRKY ÚPLNÝ T3/MJ	S532980552123	1	KS	EUR /
89	Lever T3/UJ	S532913302043	1	KS	EUR /

90	Gear pin T3/UJ	S532090162093	1	KS	EUR /
91	Washer 13	N311210505	1	KS	EUR /
92	Nut M 10	N311129502	1	KS	EUR /
93	Screw M 8X30	N309503515	1	KS	EUR /
94	Plug,cruise control 0-8066-208	N321841101	1	KS	EUR /
95	Parking lever 0-8066-206 1to1	N443900160	1	KS	EUR /
96	Lever holder,cc.&brake 0-8066-207	N443900161	1	KS	EUR /

SECO INDUSTRIES

Model: KAJ6P-23-0001

Group: KAJ20-22-0001 Mowing 92

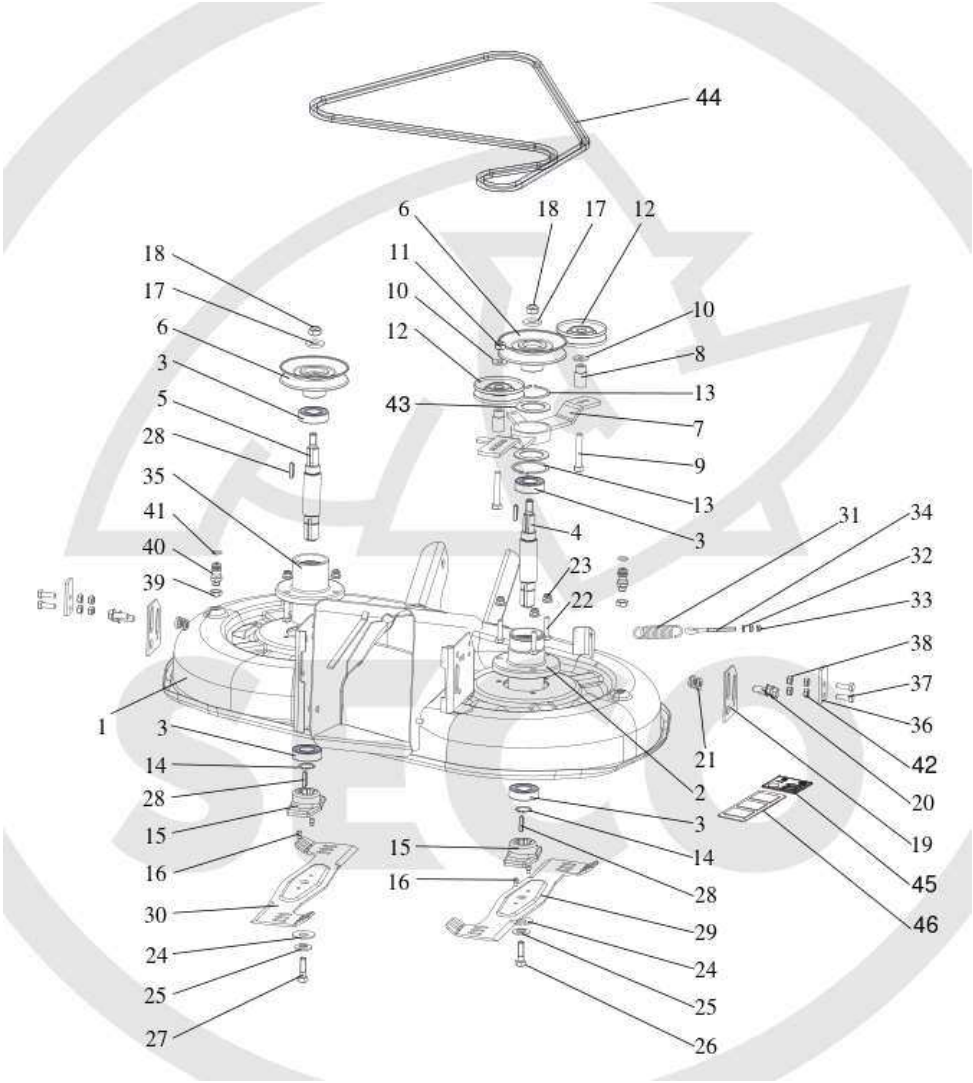

SECO
INDUSTRIES

ID	Name	Item code	No.	UOM	Price
1	Mowing cover 92/2011	S532950472283	1	KS	EUR /
2	Flange	S532038523923	1	KS	EUR /
3	Bearing 6205 2 RS C 66IB	N324162099	4	KS	EUR /
4	SHAFT	S532038128403	1	KS	EUR /
5	Shaft	S532038128413	1	KS	EUR /
6	Pulley compl. 9-3325-293	N532151209	2	KS	EUR /
7	Tensioner pulley holder	S532913413303	1	KS	EUR /
8	Bushing	S532094214173	2	KS	EUR /
9	Screw M 10X60	N309503519	2	KS	EUR /
10	Washer 11 Zinc	N311212521	2	KS	EUR /
11	Nut M 10	N311129502	2	KS	EUR /
12	Pulley Compensa C-00237/2	N532150784	2	KS	EUR /
13	Safety ring 60	N311733032	2	KS	EUR /
14	Lock ring 25	N311733014	2	KS	EUR /
15	Flange	S532098212403	2	KS	EUR /
16	Shear Stud 0-9311-736 (100 PCs)	N532980077	4	KS	EUR /
17	Washer	S532092207273	2	KS	EUR /
18	Nut M 12	N311129505	2	KS	EUR /
19	Foot	S532014417293	2	KS	EUR /
20	Screw M10X25KL100 Ripp. V. DACROM	N309578529	4	KS	EUR /
21	Nut M10 RIPP KL 10 BN 2798	N311129522	4	KS	EUR /
22	Screw M 8X35	N309503543	6	KS	EUR /
23	Nut M 8 DIN 6926 8 Zinc	N532150290	6	KS	EUR /
24	Washer BN 806-40x16.3x2x3.1	N311219503	2	KS	EUR /
25	Washer	S532092207493	2	KS	EUR /
26	Screw 0-9011-283 M10 Left	N309599008	1	KS	EUR /
27	Screw 0-9011-287 M10	N309599017	1	KS	EUR /
28	Key 6E7X6X28	N311726091	4	KS	EUR /
29	Blade right (AJ92)	S532050422843	1	KS	EUR /
30	Blade left (AJ92)	S532050422833	1	KS	EUR /
31	Spring 0-9746-490	N315231234	1	KS	EUR /
32	Washer 6.4	N311210502	1	KS	EUR /
33	Nut M6	N311150504	2	KS	EUR /
34	Screw M 6x80 with eye BN1006 Zinc	N309578523	1	KS	EUR /
35	Flange	S532038523933	1	KS	EUR /
36	Foot	S532114327243	2	KS	EUR /
37	Screw M 8X25	N309503512	4	KS	EUR /
38	Nut M 8	N311129501	4	KS	EUR /
39	Nut M 12	N311120511	2	KS	EUR /
40	Quick fastener 0-9026-246	N532150533	1	KS	EUR /
41	Ring 10.78X2.62 NBR 70-SH	N273111057	1	KS	EUR /
42	Nut M 8	N311150503	4	KS	EUR /
43	Washer	S532092208673	3	KS	EUR /

44	V-belt AA 85 POWER TYP 313	N272731234	1	KS	EUR /
45	Label 0-8732-559 Noise 100 dB	N283292437	1	KS	EUR /
46	Decal-safety 0-8730-510	N283292121	2	KS	EUR /

Model: KAJ6P-23-0001

Group: KAJ21-23-0002 Engine hood AJ

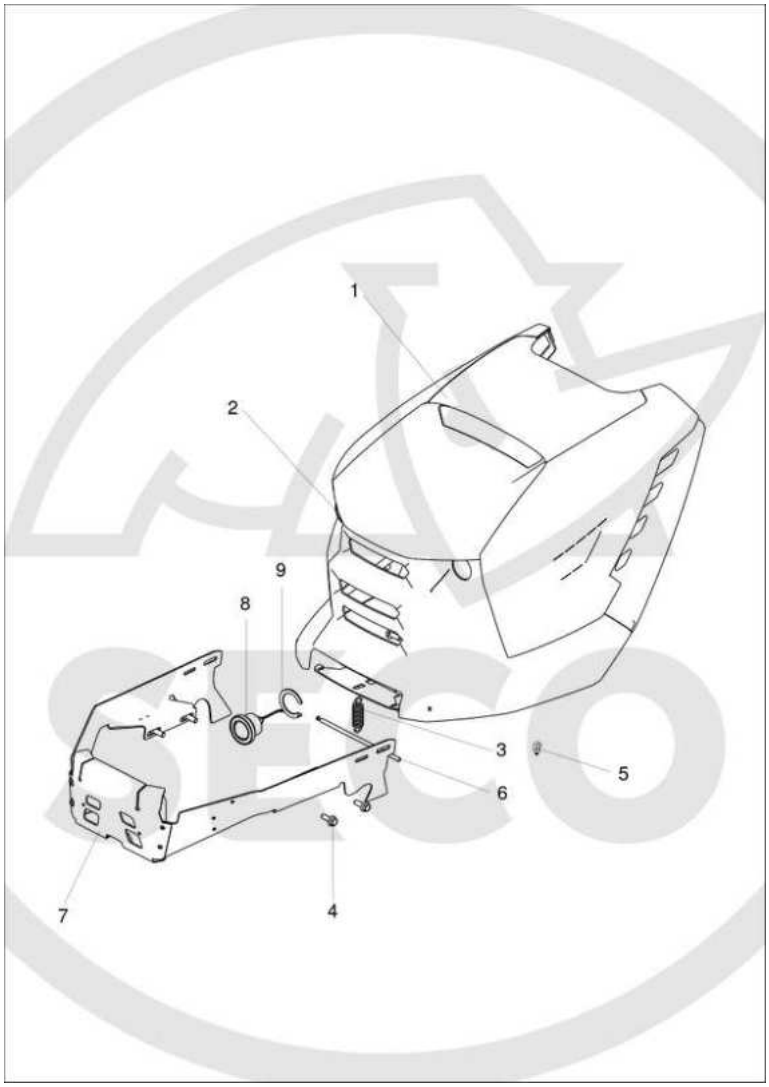

SECO
INDUSTRIES

ID	Name	Item code	No.	UOM	Price
1	KAPOTA ÚPLNÁ 9-1849-494	N532151869	1	KS	EUR /
2	Lights connection KS004137 1to1	N341271222	1	KS	EUR /
3	Spring 0-9746-472	N315231203	1	KS	EUR /
4	Screw M 10x25 DIN 6921	N309578554	4	KS	EUR /
5	Clip WSBH 1-0-1	N532150211	3	KS	EUR /
6	Safety bar	S532013102143	1	KS	EUR /
7	Bumper design 2021/AJ	S532918452213	1	KS	EUR /
8	Light, main KS004133	N341271220	2	KS	EUR /
9	Arrestment ring KS004132	N341271221	2	KS	EUR /

Model: KAJ6P-23-0001

Group: KAJ22-20-0001 Elm.Clutch and pulleys AJ

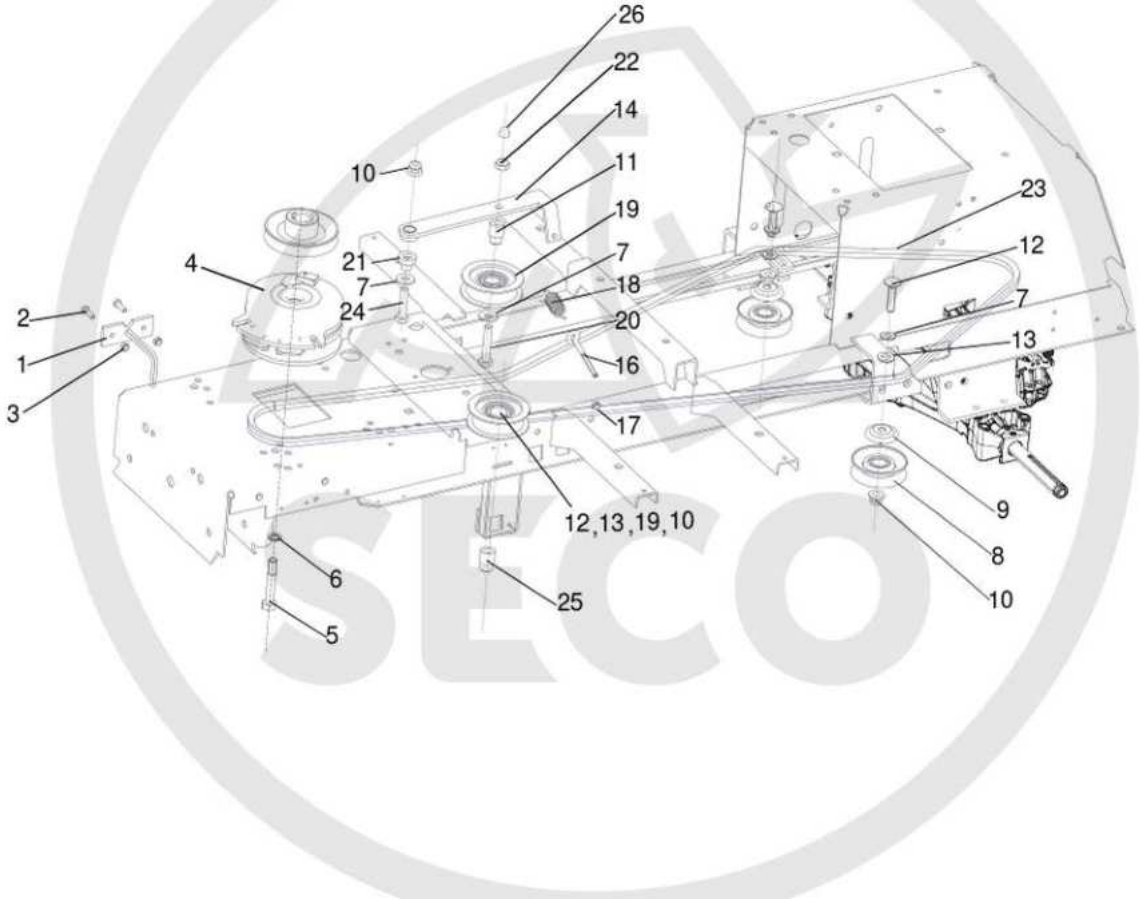

SECO
INDUSTRIES

ID	Name	Item code	No.	UOM	Price
1	Clutch stopper	S532936362263	1	KS	EUR /
2	Screw M 6X20	N309503548	2	KS	EUR /
3	Nut M 6 DIN 6926	N311129525	2	KS	EUR /
4	Elmag. clutch I-5217-38	N532151196	1	KS	EUR /
5	Screw UNF 7/16"X3" 10.9 ZINK	N309579511	1	KS	EUR /
6	Washer NL 11 glued Dacromet	N311219516	1	KS	EUR /
7	Washer 11 Zinc	N311212521	4	KS	EUR /
8	Pulley Compensa C-00237/1	N532150824	2	KS	EUR /
9	Cover C-00693 Compensa	N532151119	2	KS	EUR /
10	Nut M 10 DIN 6926 Zinc	N311129523	4	KS	EUR /
11	Case	S532094215953	1	KS	EUR /
12	Screw M10X45 021319 Zinc	N309019531	3	KS	EUR /
13	Washer 13	N311210505	3	KS	EUR /
14	Tension travel holder	S532913323033	1	KS	EUR /
15	Not used in this performance	NK00000000	1	KS	EUR /
16	Screw M 6x80 with eye BN1006 Zinc	N309578523	1	KS	EUR /
17	Nut M 6	N311129513	1	KS	EUR /
18	Spring TZ 2x14x62 Zinc	N315231111	1	KS	EUR /
19	Pulley plastic BBT B18 337	N532150733	2	KS	EUR /
20	Screw M 10X55	N309203525	1	KS	EUR /
21	Bushing	S532094214513	1	KS	EUR /
22	Nut M 10	N311129502	1	KS	EUR /
23	V-belt VB 13x2600LI Optibelt	N272731253	1	KS	EUR /
24	Screw M 10x45	N309203544	1	KS	EUR /
25	Tension pulley case	S532094214533	1	KS	EUR /
26	Screw cap MOSS 034101622003	N532151680	1	KS	EUR /

Model: KAJ6P-23-0001

Group: KAJ23-22-0001 Mowing unit no.2

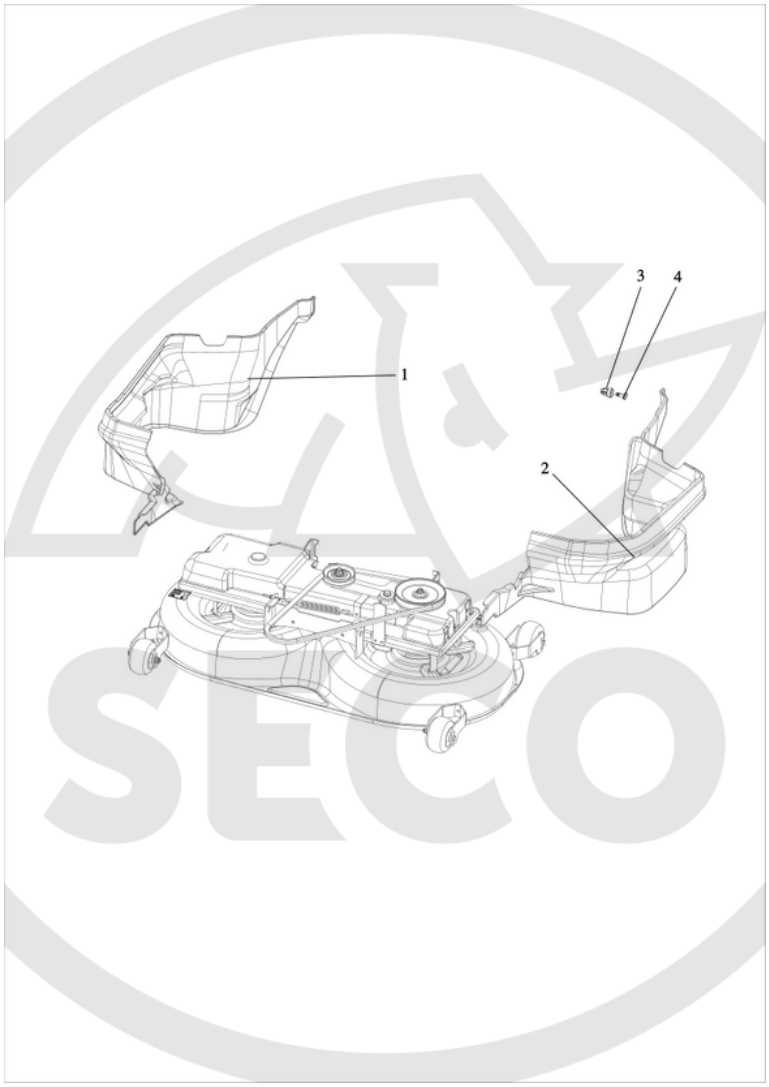

ID	Name	Item code	No.	UOM	Price
1	Belt cover 0-8547-262 L A92	N532151844	1	KS	EUR /
2	Belt cover 0-8547-266 R AJ92	N532151845	1	KS	EUR /
3	Seating D7-201-802-010	N532150903	8	KS	EUR /
4	Pin D7-201-711-010	N532150904	8	KS	EUR /

Model: KAJ6P-23-0001

Group: KAJ25-22-0001 Fuel tank

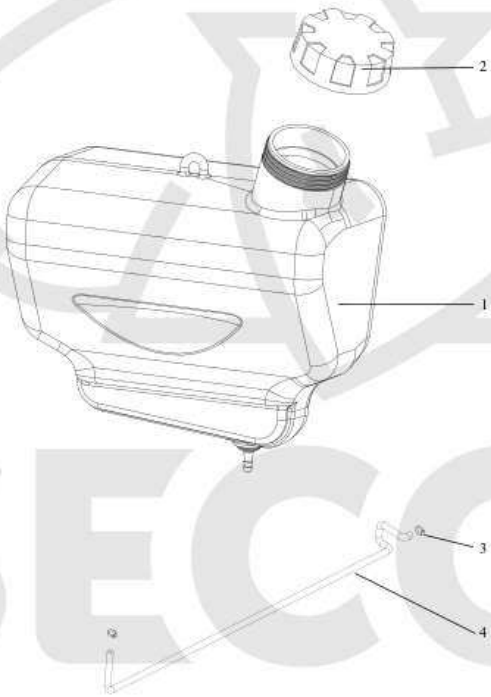

SECO
INDUSTRIES

ID	Name	Item code	No.	UOM	Price
1	Fuel tank 0-2766-220 clear	N232130021	1	KS	EUR /
2	Fuel tank Cap 9-2725-201	N321841017	1	KS	EUR /
3	Clip UM 5008	N000532058	2	KS	EUR /
4	Fuel hose for NJ, AJ, UJ	S532986018003	1	KS	EUR /