EN

ESS

FRC

KOHLER® 6000 Series
KOHLER® 7000 Series

KT610-KT620, KT715-KT745
Owner's Manual

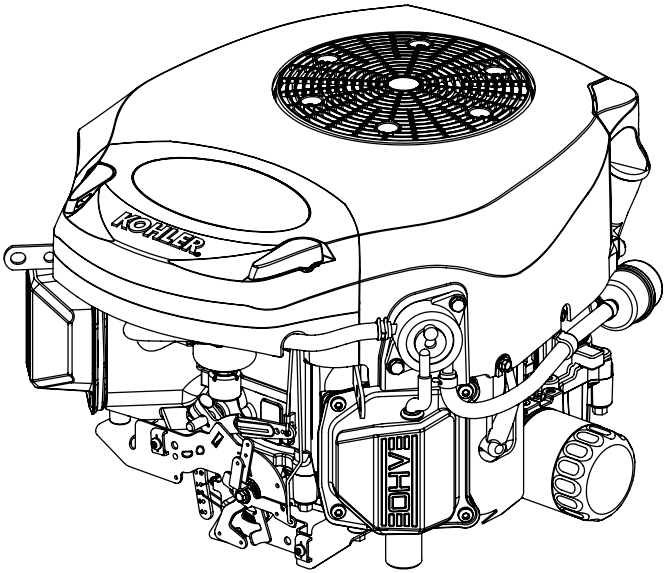

IMPORTANT:

Read all safety precautions and instructions carefully before operating equipment. Refer to operating instruction of equipment that this engine powers.

Ensure engine is stopped and level before performing any maintenance or service.

Warranty coverage as outlined in warranty card and on KohlerEngines.com. Please review carefully as it provides your specific rights and obligations.

To maintain compliance with applicable emission regulations, exhaust system backpressure may not exceed limits which can be found on KohlerEngines.com. Search by Model No., then select Specs tab.

Kohler Engines has published CO2 values on KohlerEngines.com website.

Record engine information to reference when ordering parts or obtaining warranty coverage.

Engine Model _____

Specification _____

Serial Number _____

Purchase Date _____

32 590 23 Rev. B

KohlerEngines.com

Safety Precautions

⚠ **WARNING:** A hazard that could result in death, serious injury, or substantial property damage.

⚠ **CAUTION:** A hazard that could result in minor personal injury or property damage.

NOTE: is used to notify people of important installation, operation, or maintenance information.



⚠ WARNING

Explosive Fuel can cause fires and severe burns.

Do not fill fuel tank while engine is hot or running.

Gasoline is extremely flammable and its vapors can explode if ignited. Store gasoline only in approved containers, in well ventilated, unoccupied buildings, away from sparks or flames. Spilled fuel could ignite if it comes in contact with hot parts or sparks from ignition. Never use gasoline as a cleaning agent.



⚠ WARNING

Carbon Monoxide can cause severe nausea, fainting or death.

Avoid inhaling exhaust fumes. Never run engine indoors or in enclosed spaces.

Engine exhaust gases contain poisonous carbon monoxide. Carbon monoxide is odorless, colorless, and can cause death if inhaled.



⚠ WARNING

Accidental Starts can cause severe injury or death.

Disconnect and ground spark plug lead(s) before servicing.

Before working on engine or equipment, disable engine as follows: 1) Disconnect spark plug lead(s). 2) Disconnect negative (–) battery cable from battery.



⚠ WARNING

Rotating Parts can cause severe injury.

Stay away while engine is in operation.

Keep hands, feet, hair, and clothing away from all moving parts to prevent injury. Never operate engine with covers, shrouds, or guards removed.



⚠ CAUTION

Electrical Shock can cause injury.

Do not touch wires while engine is running.



⚠ WARNING

Hot Parts can cause severe burns.

Do not touch engine while operating or just after stopping.

Never operate engine with heat shields or guards removed.

⚠ WARNING: This product can expose you to chemicals including carbon monoxide and benzene, which are known to the State of California to cause cancer and birth defects or other reproductive harm. For more information go to www.P65Warnings.ca.gov.

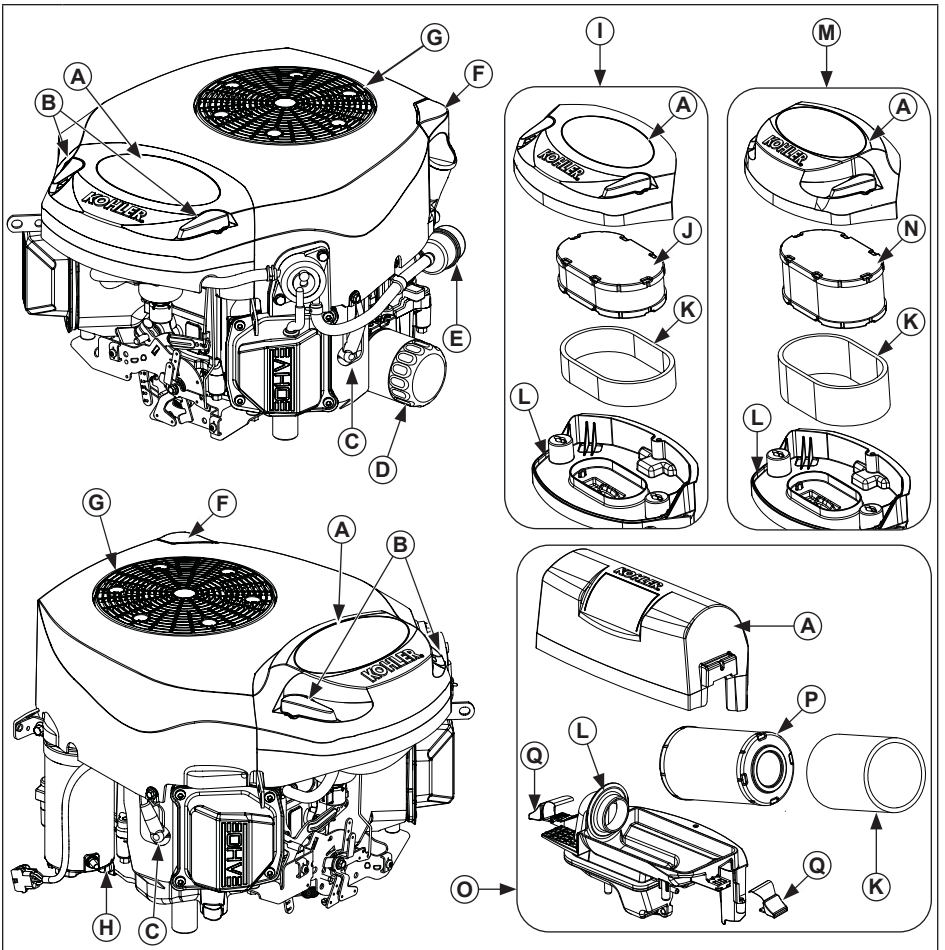

A	Air Cleaner Cover	**B**	Air Cleaner Cover Lever	**C**	Spark Plug	**D**	Oil Filter
E	Fuel Filter	**F**	Oil Fill/Dipstick	**G**	Debris Screen	**H**	Oil Drain Plug
I	Low-Profile Air Cleaner (LPAC)	**J**	LPAC Element	**K**	Precleaner	**L**	Air Cleaner Base
M	High Performance Air Cleaner	**N**	High Performance Element	**O**	PRO Performance Air Cleaner	**P**	PRO Performance Element
Q	Bail						

Visit KohlerEngines.com for service parts information and purchasing options.

Pre-Start Checklist

1. Check oil level. Add oil if low. Do not overfill.
2. Check fuel level. Add fuel if low. Check fuel system components and lines for leaks.
3. Check and clean cooling areas, air intake areas and external surfaces of engine (particularly after storage).
4. Check that air cleaner components and all shrouds, equipment covers, and guards are in place and securely fastened.
5. Check spark arrestor (if equipped).

Starting



⚠ WARNING

Carbon Monoxide can cause severe nausea, fainting or death.

Avoid inhaling exhaust fumes. Never run engine indoors or in enclosed spaces.

Engine exhaust gases contain poisonous carbon monoxide. Carbon monoxide is odorless, colorless, and can cause death if inhaled.



⚠ WARNING

Rotating Parts can cause severe injury.

Stay away while engine is in operation.

Keep hands, feet, hair, and clothing away from all moving parts to prevent injury. Never operate engine with covers, shrouds, or guards removed.

Standard Choke System

● Above 32°F (0°C)

Refer to operating instructions of equipment this engine powers for specific starting instructions.

● 32°F (0°C) and Below

1. Refer to operating instructions of equipment this engine powers for specific starting instructions.
2. Refer to Cold Weather Starting Hints within this manual.

Smart-Choke™

● Above 32°F (0°C)

1. This feature will automatically adjust engine choke on start up with throttle in any position.
2. If engine does not start on first attempt, wait 3-5 seconds and try again (if no start after third attempt:

   Engines before Serial No. 51119XXXXX wait 1 minute).

   Engines after Serial No. 51118XXXXX turn key OFF and wait 2 minutes.
3. If engine does not consistently start by fifth attempt, consult Kohler authorized dealer for assistance.

● 32°F (0°C) and Below

1. This feature will automatically adjust engine choke on start up with throttle in any position (winter blend fuel is recommended).
2. If engine does not start on first attempt, wait 5-10 seconds and try again (if no start after third attempt:

   Engines before Serial No. 51119XXXXX wait 1 minute).

   Engines after Serial No. 51118XXXXX turn key OFF and wait 2 minutes.
3. If engine does not consistently start by fifth attempt, consult Kohler authorized dealer for assistance.

eChoke™

● Above 32°F (0°C)

1. This feature will automatically make system adjustments to engine on start up with throttle in any position.
2. If engine does not start on first attempt, wait 3-5 seconds and try again (if no start after third attempt wait 1 minute).
3. If engine does not start consistently by fifth attempt, turn key to OFF, pause briefly, and make another attempt. If engine does not start, consult Kohler authorized dealer for assistance.

● 32°F (0°C) and Below

1. This feature will automatically make system adjustments to engine on start up with throttle in any position (winter blend fuel is recommended).
2. If engine does not start on first attempt, wait 3-5 seconds and try again (if no start after third attempt wait 1 minute).
3. If engine does not start consistently by fifth attempt, turn key to OFF, pause briefly, and make another attempt. If engine does not start, consult Kohler authorized dealer for assistance.

Cold Weather Starting Hints

1. Use proper oil for temperature expected.
2. Disengage all possible external loads.
3. Use fresh winter grade fuel. Winter grade fuel has higher volatility to improve starting.
4. Make sure battery has a full charge.

Stopping

1. If possible, remove load by disengaging all PTO driven attachments.
2. Position throttle control between half and full throttle; stop engine.
3. Do not allow engine/application to be left unattended with key ON (RUN position) for long periods. If left in such a condition, operator must turn key completely OFF before attempting a restart to reset system.

Angle of Operation

Refer to operating instructions of equipment this engine powers. Do not operate this engine exceeding maximum angle of operation; see specification table. Engine damage could result from insufficient lubrication.

Engine Speed

NOTE: Do not tamper with governor setting to increase maximum engine speed. Overspeed is hazardous and will void warranty.

High Altitude Operation

If this engine is operated at an altitude of 4000 ft. (1219 meters) or above, a high altitude carburetor kit is required. To obtain high altitude carburetor kit information or to find a Kohler authorized dealer, visit KohlerEngines.com or call 1-800-544-2444 (U.S. and Canada).

This engine should be operated in its original configuration below 4000 ft. (1219 meters).

Operating this engine with the wrong engine configuration at a given altitude may increase its emissions, decrease fuel efficiency and performance, and result in damage to the engine.

Maintenance Instructions



⚠ WARNING

Accidental Starts can cause severe injury or death. Disconnect and ground spark plug lead(s) before servicing.

Before working on engine or equipment, disable engine as follows: 1) Disconnect spark plug lead(s). 2) Disconnect negative (–) battery cable from battery.

Normal maintenance, replacement or repair of emission control devices and systems may be performed by any repair establishment or individual; however, warranty repairs must be performed by a Kohler authorized dealer found at KohlerEngines.com or 1-800-544-2444 (U.S. and Canada).

Maintenance Schedule
Every 25 Hours[1]
● Service/replace precleaner.
● Replace LPAC element (if not equipped with precleaner).
Every 50 Hours[1]
● Replace LPAC element (if equipped with precleaner).
● Replace high performance air cleaner element (if not equipped with precleaner).
Every 75 Hours[1]
● Replace high performance air cleaner element (if equipped with precleaner).
● Replace PRO performance air cleaner element (if not equipped with precleaner).
Every 100 Hours[1]
● Replace PRO performance air cleaner element (if equipped with precleaner).
● Change oil and filter.
● Remove cooling shrouds and clean cooling areas.
Every 100 Hours
● Check that all fasteners are in place and components are properly secured.
● Replace fuel filter.
Every 300 Hours[3]
● Change oil and filter (KOHLER PRO 10W-50 oil and KOHLER PRO filter only).
Every 500 Hours[2]
● Have valve lash checked/adjusted.
Every 500 Hours
● Replace spark plugs and set gap.

[1] Perform these procedures more frequently under severe, dusty, dirty conditions.

[2] Have a Kohler authorized dealer perform this service.

[3] Option only if using KOHLER® PRO oil and PRO filter.

Oil Recommendations

All-season KOHLER® PRO 10W-50 Synthetic Oil is the ideal oil for KOHLER engines. It is specifically formulated to extend the oil and oil filter change interval to 300 Hours when paired with a KOHLER PRO Extended Life Oil Filter.

300-Hour oil and oil filter change intervals are exclusive to and only authorized on KOHLER engines that utilize both the KOHLER PRO 10W-50 Synthetic Oil and KOHLER PRO Extended Life Oil Filter. Alternative engine oils and oil filters may be used with KOHLER engines but require 100-Hour oil and oil filter change intervals for proper maintenance. Oil must be API (American Petroleum Institute) service class SJ or higher. Select viscosity based on air temperature at time of operation as shown below.

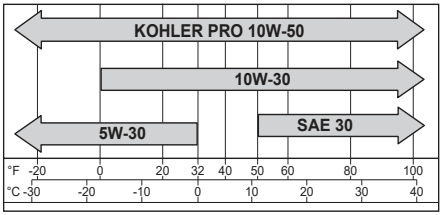

Check Oil Level

NOTE: To prevent extensive engine wear or damage, never run engine with oil level below or above operating range indicator on dipstick.

Ensure engine is cool. Clean oil fill/dipstick areas of any debris.

1. Remove dipstick; wipe oil off.
2. Reinsert dipstick into tube; press completely down.
3. Remove dipstick; check oil level. Level should be at top of indicator on dipstick.
4. If oil is low on indicator, add oil up to top of indicator mark.
5. Reinstall and secure dipstick.

Change Oil and Filter

Change oil while engine is warm.

1. Clean area around oil fill cap/dipstick. Remove drain plug and oil fill cap/dipstick. Allow oil to drain completely.
2. Clean area around oil filter. Place a container under filter to catch any oil and remove filter. Wipe off mounting surface. Reinstall drain plug. Torque to 10 ft. lb. (13.6 N·m).
3. Place new filter in shallow pan with open end up. Fill with new oil until oil reaches bottom of threads. Allow 2 minutes for oil to be absorbed by filter material.
4. Apply a thin film of clean oil to rubber gasket on new filter.
5. Refer to instructions on oil filter for proper installation.
6. Fill crankcase with new oil. Level should be at top of indicator on dipstick.
7. Reinstall oil fill cap/dipstick and tighten securely.
8. Start engine; check for oil leaks. Stop engine; correct leaks. Recheck oil level.
9. Dispose of used oil and filter in accordance with local ordinances.

Oil Sentry™ (if equipped)

This switch is designed to prevent engine from starting in a low oil or no oil condition. Oil Sentry™ may not shut down a running engine before damage occurs. In some applications this switch may activate a warning signal. Read your equipment manuals for more information.

Fuel Recommendations



⚠ WARNING

Explosive Fuel can cause fires and severe burns.

Do not fill fuel tank while engine is hot or running.

Gasoline is extremely flammable and its vapors can explode if ignited. Store gasoline only in approved containers, in well ventilated, unoccupied buildings, away from sparks or flames. Spilled fuel could ignite if it comes in contact with hot parts or sparks from ignition. Never use gasoline as a cleaning agent.

NOTE: E15, E20 and E85 are NOT approved and should NOT be used; effects of old, stale or contaminated fuel are not warrantable.

Fuel must meet these requirements:

- Clean, fresh, unleaded gasoline.
- Octane rating of 87 (R+M)/2 or higher.
- Research Octane Number (RON) 90 octane minimum.
- Gasoline up to 10% ethyl alcohol, 90% unleaded is acceptable.
- Methyl Tertiary Butyl Ether (MTBE) and unleaded gasoline blend (max 15% MTBE by volume) are approved.
- Do not add oil to gasoline.
- Do not overfill fuel tank.
- Do not use gasoline older than 30 days.

Fuel Line

Low permeation fuel line must be installed on carbureted Kohler Co. engines to maintain EPA and CARB regulatory compliance.

Spark Plugs



⚠ CAUTION

Electrical Shock can cause injury.

Do not touch wires while engine is running.

Clean out spark plug recess. Remove plug and replace.

1. Check gap using wire feeler gauge. Adjust gap, see specification table for adjustment.
2. Install plug into cylinder head.
3. Torque plug to 20 ft. lb. (27 N·m).

Air Cleaner

NOTE: Operating engine with loose or damaged air cleaner components could cause premature wear and failure. Replace all bent or damaged components.

NOTE: Paper element cannot be blown out with compressed air.

Rotate air cleaner cover levers outward to unlock cover; remove air cleaner cover.

or

Move bails on air cleaner cover up; remove latches from cover; remove cover.

Precleaner (if equipped):

1. Remove precleaner from paper element.
2. Replace or wash precleaner in warm water with detergent. Rinse and allow to air dry.
3. Lightly oil precleaner with new engine oil; squeeze out excess oil.
4. Reinstall precleaner over paper element.

Paper Element:

1. Remove element from base; service precleaner. Discard element.
2. Install precleaner over new paper element and install on base.

Position air cleaner cover with levers outward over air cleaner; turn levers inward to lock.

or

Reinstall cover; place latches onto cover; pull down bails to secure cover.

Breather Tube

Ensure both ends of breather tube are properly connected.

Air Cooling



⚠ WARNING

Hot Parts can cause severe burns.

Do not touch engine while operating or just after stopping.

Never operate engine with heat shields or guards removed.

Proper cooling is essential. To prevent over heating, clean screens, cooling fins, and other external surfaces of engine. Avoid spraying water at wiring harness or any electrical components. See Maintenance Schedule.

Repairs/Service Parts

We recommend that you use a Kohler authorized dealer for all maintenance, service, and engine parts. To find a Kohler authorized dealer visit KohlerEngines.com or call 1-800-544-2444 (U.S. and Canada).

Storage

If engine will be out of service for 2 months or more follow procedure below.

1. Add KOHLER PRO Series fuel treatment or equivalent to fuel tank. Run engine 2-3 minutes to get stabilized fuel into fuel system (failure due to untreated fuel are not warrantable).
2. Change oil while engine is still warm from operation (NOT required if using KOHLER PRO 10W-50 full-synthetic oil). Remove spark plug(s) and pour about 1 oz. of engine oil into cylinder(s). Replace spark plug(s) and crank engine slowly to distribute oil.
3. Disconnect negative (–) battery cable.
4. Store engine in a clean, dry place.

Troubleshooting

Do not attempt to service or replace major engine components, or any items that require special timing or adjustment procedures. This work should be performed by a Kohler authorized dealer.

Problem	Possible Cause							
	No Fuel	Improper Fuel	Dirt In Fuel Line	Dirty Debris Screen	Incorrect Oil Level	Engine Overloaded	Dirty Air Cleaner	Faulty Spark Plug
Will Not Start	●	●	●		●	●	●	●
Hard Starting		●	●		●	●	●	●
Stops Suddenly	●		●	●	●	●	●	●
Lacks Power		●	●	●	●	●	●	●
Operates Erratically		●	●	●		●	●	●
Knocks or Pings		●		●		●		●
Skips or Misfires		●	●	●			●	●
Backfires		●	●			●	●	●
Overheats		●	●	●	●	●	●	
High Fuel Consumption						●	●	●

Engine Specifications

Model	Bore	Stroke	Displacement	Oil Capacity (Refill)	Spark Plug Gap	Maximum Angle of Operation (@ full oil level)*
KT610	3.27 in. (83 mm)	2.4 in. (61 mm)	40.3 cu. in. (660 cc)	2.0 U.S. qt. (1.9 L)	0.030 in. (0.76 mm)	25°
KT620						
KT715		2.6 in. (67 mm)	44.2 cu. in. (725 cc)			
KT725						
KT730						
KT735						
KT740**						
KT745		2.7 in. (69 mm)	45.6 cu. in. (747 cc)			

*Exceeding maximum angle of operation may cause engine damage from insufficient lubrication.

**KT740 engines with PRO Performance Air Cleaner have 45.6 cu. in. (747 cc) Displacement.

Additional specification information can be found in service manual at KohlerEngines.com.

Any and all horsepower (hp) references by Kohler are Certified Power Ratings and per SAE J1940 & J1995 hp standards. Details on Certified Power Ratings can be found at KohlerEngines.com.

Emission Control System

Exhaust Emission Control System for models KT610-KT620, KT715-KT745 is EM for U.S. EPA, California, and Europe.

NOTE: Tampering with the engine and its emission control system voids the EPA Certificate of Conformity, ARB Executive Order, and EU type-approval.