WSM

WORKSHOP MANUAL
DIESEL ENGINE

05-E4B SERIES,
05-E4BG SERIES

Kubota

KiSC issued 04, 2011 A

TO THE READER

This Workshop Manual tells the servicing personnel about the mechanism, servicing and maintenance of the 05-E4B and 05-E4BG. It contains 4 parts: **"Information"**, **"General"**, **"Mechanism"** and **"Servicing"**.

■ **Information**

This section primarily contains information below.

- Safety First
- Specification
- Performance Curve
- Dimension

■ **General**

This section primarily contains information below.

- Engine Identification
- Muffler Full Assembly Identification
- General Precautions
- Maintenance Check List
- Check and Maintenance
- Special Tools

■ **Mechanism**

This section contains information on the structure and the function of the unit. Before you continue with the subsequent sections, make sure that you read this section.

Refer to Workshop Manual (Code No. 9Y021-01870) for the diesel engine mechanism that this workshop manual does not include.

■ **Servicing**

This section primarily contains information below.

- Troubleshooting
- Servicing Specifications
- Tightening Torques
- Checking, Disassembling and Servicing

All illustrations, photographs and specifications contained in this manual are of the newest information available at the time of publication.

KUBOTA reserves the right to change all information at any time without notice.

February, 2013

© KUBOTA Corporation 2013

Record of Revisions

For pdf, use search function {Search word} to find all the revised locations.

Last digit of the Code No.	Issue month	Main Revised Point and Corrective Measures {Search word}	Reference Page
1	2014.04	• Add D1005-E4B 3000 rpm specifications type {2. SPECIFICATIONS} {[12] CHECK POINTS OF EVERY 3000 HOURS} {(4) Fuel System} • Add BG type {2. SPECIFICATIONS} {4. DIMENSIONS} {3. MAINTENANCE CHECK LIST} {4. CHECK AND MAINTENANCE} {1. ENGINE BODY} {2. SERVICING SPECIFICATIONS} {[2] TIGHTENING TORQUES FOR SPECIAL USE SCREWS, BOLTS AND NUTS} {[1] CHECKING AND ADJUSTING}	 I-5, I-8 G-23 1-S19 I-7 I-16, I-17 G-5 G-9, G-14, G-23 1-M1 1-S5 1-S13 1-S14

I INFORMATION

INFORMATION

CONTENTS

1. SAFETY FIRST I-1
2. SPECIFICATIONS I-5
3. PERFORMANCE CURVES I-8
4. DIMENSIONS I-13

1. SAFETY FIRST

⚠ SAFETY FIRST

- **This symbol, the industry's "Safety Alert Symbol", is used throughout this manual and on labels on the machine itself to warn of the possibility of personal injury. Read these instructions carefully.**
- **It is essential that you read the instructions and safety regulations before you try to repair or use this unit.**

⚠ DANGER
- **Indicates an imminently hazardous situation which, if not avoided, will result in death or serious injury.**

⚠ WARNING
- **Indicates a potentially hazardous situation which, if not avoided, could result in death or serious injury.**

⚠ CAUTION
- **Indicates a potentially hazardous situation which, if not avoided, may result in minor or moderate injury.**

■ IMPORTANT
- **Indicates that equipment or property damage could result if instructions are not followed.**

■ NOTE
- **Gives helpful information.**

WSM000001INI0001US1

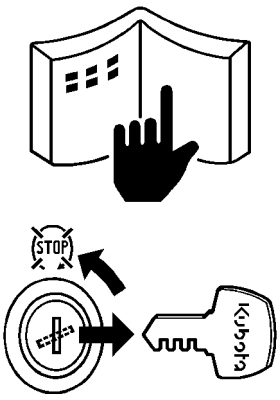

IBM001A


IBM011A

BEFORE YOU START SERVICE

- Read all instructions and safety instructions in this manual and on your engine safety decals.
- Clean the work area and engine.
- Park the machine on a stable and level ground.
- Let the temperature of the engine decrease before you start a job.
- Stop the engine, then remove the key.
- Disconnect the battery negative cable.
- Hang a **"DO NOT OPERATE"** tag in the operator station.

WSM000001INI0002US0

START SAFELY

- Do not do the procedures below when you start the engine.
  - short across starter terminals
  - bypass the safety start switch
- Do not make unauthorized modifications to the engine. This can cause damage and decrease the engine life.

WSM000001INI0003US0

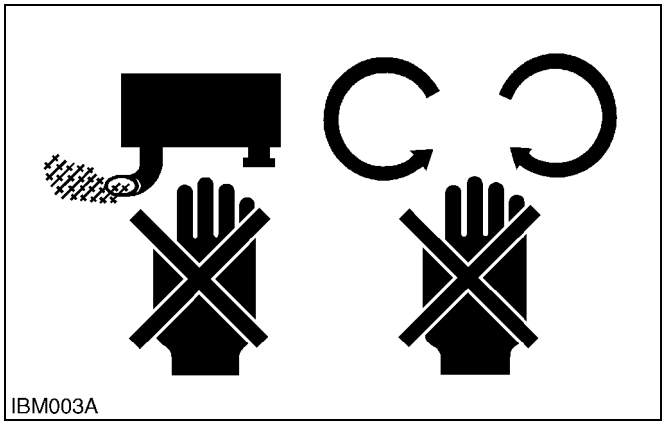
IBM003A

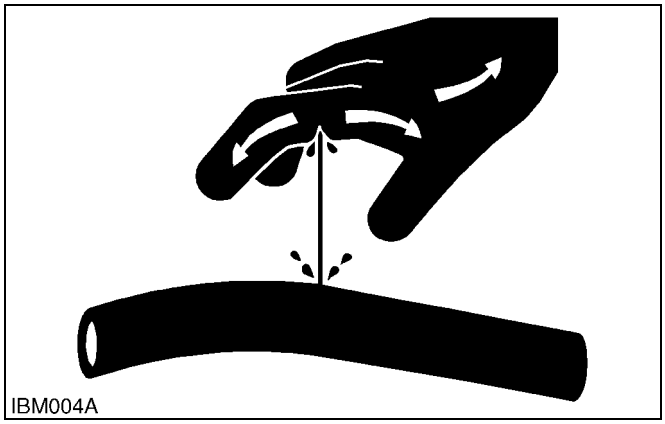
IBM004A

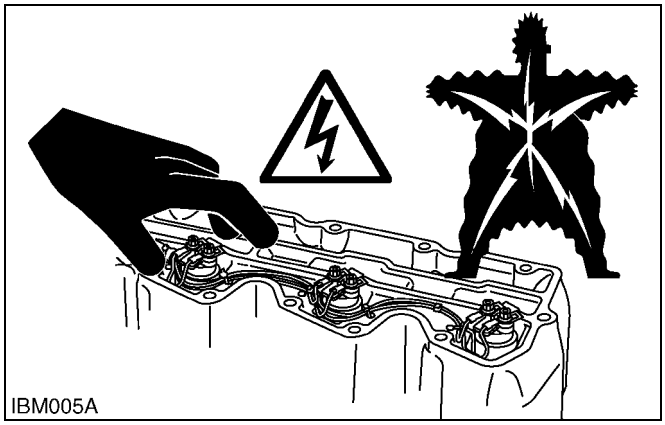
IBM005A


9Y1200165INI019A

OPERATE SAFELY

- Do not use the machine after you consume alcohol or medication or when you are tired.
- Put on applicable clothing and safety equipment.
- Use applicable tools only. Do not use alternative tools or parts.
- When 2 or more persons do servicing, make sure that you do it safely.
- Do not touch the hot parts or parts that turn when the engine operates.
- Do not remove the radiator cap when the engine operates, or immediately after it stops. If not, hot water can spout out from the radiator. Only remove the radiator cap when it is at a sufficiently low temperature to touch with bare hands. Slowly loosen the cap to release the pressure before you remove it fully.
- Released fluid (fuel or hydraulic oil) under pressure can cause damage to the skin and cause serious injury. Release the pressure before you disconnect hydraulic or fuel lines. Tighten all connections before you apply the pressure.
- Do not open a fuel system under high pressure.
  The fluid under high pressure that stays in fuel lines can cause serious injury. Do not disconnect or repair the fuel lines, sensors, or any other components between the fuel pump and injectors on engines with a common rail fuel system under high pressure.
- Put on an applicable ear protective device (earmuffs or earplugs) to prevent injury against loud noises.
- Be careful about electric shock. The engine generates a high voltage of more than DC100 V in the ECU and is applied to the injector.

WSM000001INI0004US0

PROTECT AGAINST HIGH PRESSURE SPRAY

- Spray from high pressure nozzles can penetrate the skin and cause serious injury. Keep spray from contacting hands or body.
- If an accident occurs, see a doctor immediately. Any high pressure spray injected into the skin must be surgically removed within a few hours or gangrene may result.
  Doctors unfamiliar with this type of injury should reference a knowledgeable medical source.

9Y1210651INI0014US0

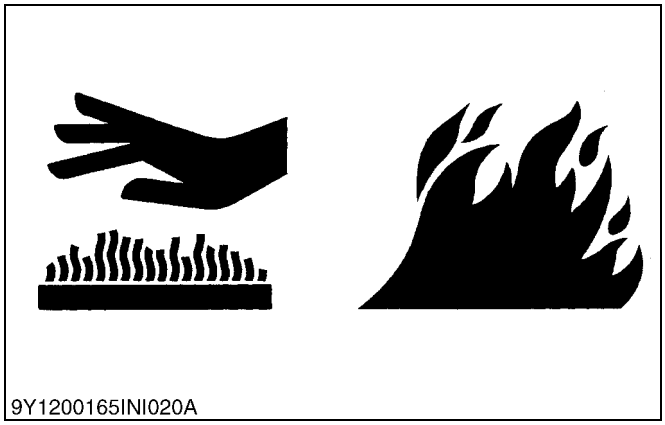
9Y1200165INI020A

AVOID HOT EXHAUST

- Servicing machine or attachments with engine operating can result in serious personal injury. Avoid exposure and skin contact with hot exhaust gases and components.
- Exhaust parts and streams become very hot during operation. Exhaust gases and components reach temperatures hot enough to burn people, ignite, or melt common materials.

9Y1210651INI0015US0

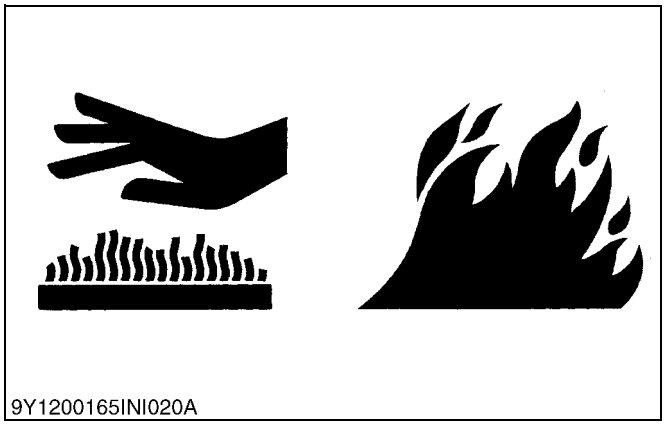
9Y1200165INI020A

EXHAUST FILTER CLEANING

- Servicing machine or attachments during exhaust filter cleaning can result in serious personal injury. Avoid exposure and skin contact with hot exhaust gases and components.
- During auto or manual/stationary exhaust filter cleaning operations, the engine will operate at elevated idle and hot temperatures for an extended period of time. Exhaust gases and exhaust filter components reach temperatures hot enough to burn people, or ignite, or melt common materials.

9Y1210651INI0016US0

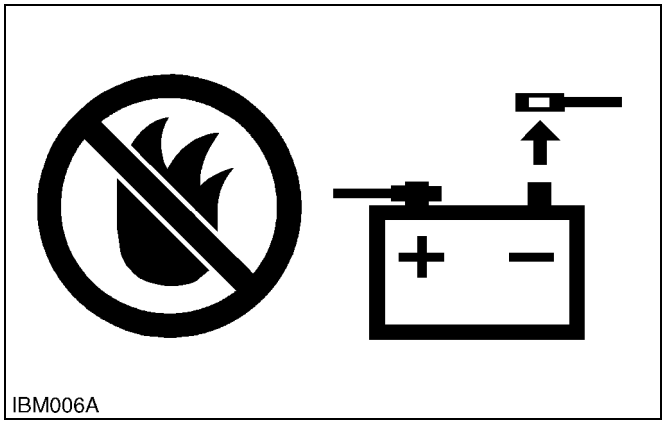
IBM006A

PREVENT A FIRE

- Fuel is very flammable and explosive under some conditions. Do not smoke or let flames or sparks in your work area.
- To prevent sparks from an accidental short circuit, always disconnect the battery negative cable first and connect it last.
- The battery gas can cause an explosion. Keep the sparks and open flame away from the top of battery, especially when you charge the battery.
- Make sure that you do not spill fuel on the engine.

WSM000001INI0005US0

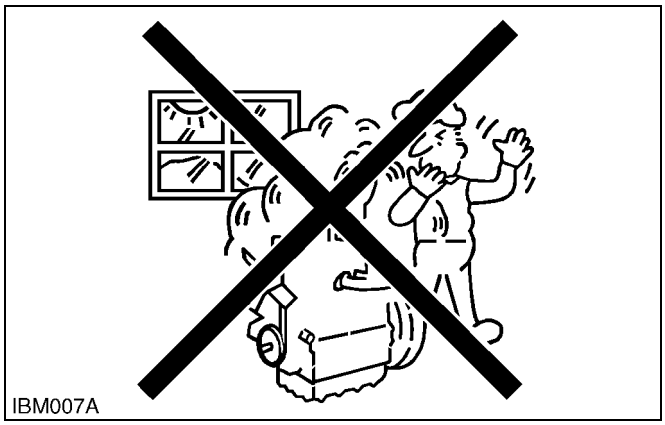
IBM007A

KEEP A GOOD AIRFLOW IN THE WORK AREA

- If the engine is in operation, make sure that the area has good airflow. Do not operate the engine in a closed area. The exhaust gas contains poisonous carbon monoxide.

WSM000001INI0006US0

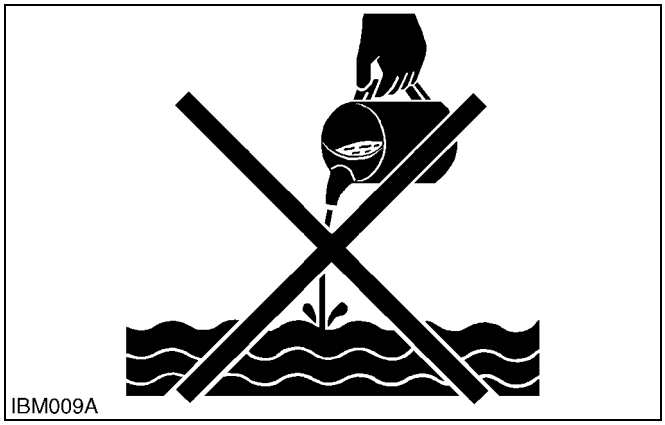
IBM009A

DISCARD FLUIDS CORRECTLY

- Do not discard fluids on the ground, down the drain, into a stream, pond, or lake. Obey related environmental protection regulations when you discard oil, fuel, coolant, electrolyte and other dangerous waste.

WSM000001INI0007US0

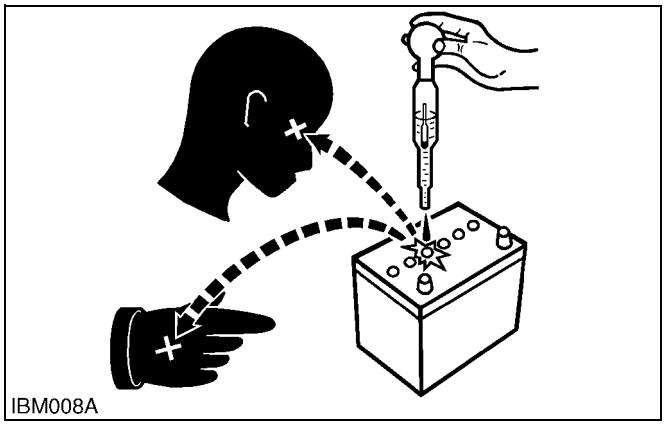
IBM008A

PREVENT ACID BURNS

- Keep electrolyte away from your eyes, hands and clothing. Sulfuric acid in battery electrolyte is poisonous and it can burn your skin and clothing and cause blindness. If you spill electrolyte on yourself, clean yourself with water, and get medical aid immediately.

WSM000001INI0008US0

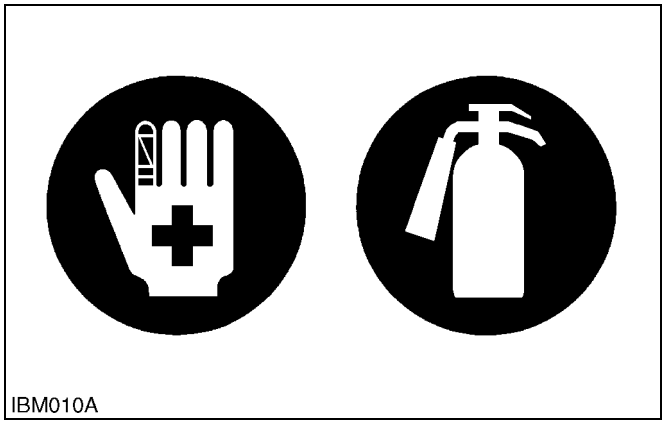
IBM010A

PREPARE FOR EMERGENCIES

- Keep a first aid kit and fire extinguisher ready at all times.
- Keep the emergency contact telephone numbers near your telephone at all times.

WSM000001INI0009US0

2. SPECIFICATIONS

Model	D1005-E4B		D1105-E4B
Number of Cylinder	3		
Engine Type	Vertical, water-cooled, 4-cycle diesel engine		
Bore × Stroke	76.0 × 73.6 mm (2.99 × 2.90 in.)		78.0 × 78.4 mm (3.07 × 3.09 in.)
Total Displacement	1001 cm^3 (61.08 cu.in.)		1123 cm^3 (68.53 cu.in.)
ISO Net Continuous	14.6 kW / 3000 min^{-1} (rpm) (19.6 HP / 3000 min^{-1} (rpm))	15.4 kW / 3200 min^{-1} (rpm) (20.6 HP / 3200 min^{-1} (rpm))	15.4 kW / 3000 min^{-1} (rpm) (20.7 HP / 3000 min^{-1} (rpm))
ISO/SAE Net Intermittent	16.8 kW / 3000 min^{-1} (rpm) (22.5 HP / 3000 min^{-1} (rpm))	17.7 kW / 3200 min^{-1} (rpm) (23.7 HP / 3200 min^{-1} (rpm))	17.8 kW / 3000 min^{-1} (rpm) (23.9 HP / 3000 min^{-1} (rpm))
SAE Gross Intermittent	17.5 kW / 3000 min^{-1} (rpm) (23.5 HP / 3000 min^{-1} (rpm))	18.5 kW / 3200 min^{-1} (rpm) (24.8 HP / 3200 min^{-1} (rpm))	18.5 kW / 3000 min^{-1} (rpm) (24.8 HP / 3000 min^{-1} (rpm))
Maximum Bare Speed	3220 min^{-1} (rpm)	3420 min^{-1} (rpm)	3220 min^{-1} (rpm)
Minimum Bare Idling Speed	900 min^{-1} (rpm)	1300 min^{-1} (rpm)	900 min^{-1} (rpm)
Combustion Chamber	Spherical type (E-TVCS)		
Fuel Injection Pump	Bosch MD type mini pump		
Governor	All speed mechanical governor		
Direction of Rotation	Counter-clockwise (viewed from flywheel side)		
Injection Nozzle	Mini Nozzle (DNOPD)		
Injection Timing	0.3142 rad (18.00 °) before T.D.C.	0.3491 rad (20.00 °) before T.D.C.	0.3142 rad (18.00 °) before T.D.C.
Firing Order	1-2-3		
Injection Pressure	13.73 MPa (140.0 kgf/cm^2, 1991 psi)		
Compression Ratio	24 : 1		
Lubricating System	Forced lubrication by trochoid pump		
Oil Pressure Indicating	Electrical type switch		
Lubricating Filter	Full flow paper filter (Cartridge type)		
Cooling System	Pressurized radiator, forced circulation with water pump		
Starting System	Electric Starting with Starter		
Starter Motor	12 V, 1.2 kW		
Starting Support Device	By glow plug in combustion chamber		
EGR	None		
Battery	12 V, 65 AH, equivalent		
Charging Alternator	12 V, 480 W		
Fuel	Diesel Fuel No.2-D (ASTM D975)		
Lubricating Oil	Class CF lubricating oil as per API classification is recommended. For details on recommended lubricating oils, see page G-6, G-9.		
Lubricating Oil Capacity	5.1 L (1.3 U.S.gals)		
Weight (Dry)	93.0 kg (205 lbs)		

- The specification described above is of the standard engine of each model.
- Conversion Formula: HP = 0.746 kW, PS = 0.7355 kW

9Y1210784INI0001US0

Model	D1305-E4B	V1505-E4B
Number of Cylinder	3	4
Engine Type	Vertical, water-cooled, 4-cycle diesel engine	
Bore × Stroke	78.0 × 88.0 mm (3.07 × 3.46 in.)	78.0 × 78.4 mm (3.07 × 3.09 in.)
Total Displacement	1261 cm^3 (76.95 cu.in.)	1498 cm^3 (91.41 cu.in.)
ISO Net Continuous	15.5 kW / 2600 min^{-1} (rpm) (20.8 HP / 2600 min^{-1} (rpm))	15.4 kW / 2300 min^{-1} (rpm) (20.6 HP / 2300 min^{-1} (rpm))
ISO/SAE Net Intermittent	17.9 kW / 2600 min^{-1} (rpm) (24.0 HP / 2600 min^{-1} (rpm))	17.7 kW / 2300 min^{-1} (rpm) (23.7 HP / 2300 min^{-1} (rpm))
SAE Gross Intermittent	18.5 kW / 2600 min^{-1} (rpm) (24.8 HP / 2600 min^{-1} (rpm))	18.5 kW / 2300 min^{-1} (rpm) (24.8 HP / 2300 min^{-1} (rpm))
Maximum Bare Speed	2820 min^{-1} (rpm)	2520 min^{-1} (rpm)
Minimum Bare Idling Speed	1100 min^{-1} (rpm)	1150 min^{-1} (rpm)
Combustion Chamber	Spherical type (E-TVCS)	
Fuel Injection Pump	Bosch MD type mini pump	
Governor	All speed mechanical governor	
Direction of Rotation	Counter-clockwise (viewed from flywheel side)	
Injection Nozzle	Mini Nozzle (DNOPD)	
Injection Timing	0.2793 rad (16.00 °) before T.D.C.	0.2443 rad (14.00 °) before T.D.C.
Firing Order	1-2-3	1-3-4-2
Injection Pressure	13.73 MPa (140.0 kgf/cm^2, 1991 psi)	
Compression Ratio	24 : 1	
Lubricating System	Forced lubrication by trochoid pump	
Oil Pressure Indicating	Electrical type switch	
Lubricating Filter	Full flow paper filter (Cartridge type)	
Cooling System	Pressurized radiator, forced circulation with water pump	
Starting System	Electric Starting with Starter	
Starter Motor	12 V, 1.2 kW	
Starting Support Device	By glow plug in combustion chamber	
EGR	None	
Battery	12 V, 65 AH, equivalent	12 V, 75 AH, equivalent
Charging Alternator	12 V, 480 W	
Fuel	Diesel Fuel No.2-D (ASTM D975)	
Lubricating Oil	Class CF lubricating oil as per API classification is recommended. For details on recommended lubricating oils, see page G-6, G-9.	
Lubricating Oil Capacity	5.7 L (1.5 U.S.gals)	6.7 L (1.8 U.S.gals)
Weight (Dry)	95.0 kg (209 lbs)	110.0 kg (242.5 lbs)

- The specification described above is of the standard engine of each model.
- Conversion Formula: HP = 0.746 kW, PS = 0.7355 kW

9Y1210784INI0002US0

Model	D1005-E4BG	D1105-E4BG	D1305-E4BG	V1505-E4BG
	BG1	BG1	BG1	BG1
Number of Cylinder	3			4
Engine Type	Vertical, Water-cooled, 4 cycle diesel engine			
Bore × Stroke	76.0 × 73.6 mm (2.99 × 2.90 in.)	78.0 × 78.4 mm (3.07 × 3.09 in.)	78.0 × 88.0 mm (3.07 × 3.46 in.)	78.0 × 78.4 mm (3.07 × 3.09 in.)
Total Displacement	1001 cm^3 (61.08 cu.in.)	1123 cm^3 (68.53 cu.in.)	1261 cm^3 (76.95 cu.in.)	1498 cm^3 (91.41 cu.in.)
STANDBY				
ISO 3046	9.8 kW / 1800 min^{-1} (rpm)	11.5 kW / 1800 min^{-1} (rpm)	13.1 kW / 1800 min^{-1} (rpm)	15.1 kW / 1800 min^{-1} (rpm)
SAE J-1349	13.1 HP / 1800 min^{-1} (rpm)	15.4 HP / 1800 min^{-1} (rpm)	17.6 HP/ 1800 min^{-1} (rpm)	20.2 HP / 1800 min^{-1} (rpm)
NET Continuous				
ISO 3046	8.7 kW / 1800 min^{-1} (rpm)	10.1 kW / 1800 min^{-1} (rpm)	11.6 kW / 1800 min^{-1} (rpm)	13.4 kW / 1800 min^{-1} (rpm)
SAE J-1349	11.7 HP / 1800 min^{-1} (rpm)	13.5 HP / 1800 min^{-1} (rpm)	15.6 HP / 1800 min^{-1} (rpm)	18.0 HP / 1800 min^{-1} (rpm)
Governor Regulation	Less than 5 %			
Combustion Chamber	Spherical type (E-TVCS)			
Fuel Injection Pump	Bosch MD type mini pump			
Governor	All speed mechanical governor			
Direction of Rotation	Counter-clockwise (viewed from flywheel side)			
Injection Nozzle	Mini Nozzle (DNOPD)			
Injection Timing	0.2705 rad (15.50 °) before T.D.C.		0.2618 rad (15.00 °) before T.D.C.	
Firing Order	1-2-3		1-3-4-2	
Injection Pressure	13.73 MPa (140.0 kgf/cm^2, 1991 psi)			
Compression Ration	24 : 1			
Lubricating System	Forced lubrication by trochoid pump			
Oil Pressure Indication	Electrical type switch			
Lubricating Filter	Full flow paper filter (Cartridge type)			
Cooling System	Pressurized radiator, forced circulation with water pump			
Starting System	Electric Starting with Starter			
Starting Motor	12 V, 1.0 kW			12 V, 1.2 kW
Starting Support Device	By glow plug in combustion chamber			
EGR	None			
Battery	12 V, 65 AH, equivalent		12 V, 75 AH, equivalent	
Charging Alternator	12 V, 360 W			
Fuel	Diesel Fuel No. 2-D (ASTM D975)			
Lubricating Oil	Class CF lubricating oil as per API classification is recommended. For details on recommended lubricating oils, see page G-6, G-9.			
Lubricating Oil Capacity	5.1 L (1.3 U.S.gals)		5.7 L (1.5 U.S.gals)	6.7 L (1.8 U.S.gals)
Weight (Dry)	110 kg (242 lbs)		112 kg (247 lbs)	127 kg (280 lbs)

* The specification described above is of the standard engine of each model.
* Conversion Formula: HP = 0.746 kW, PS = 0.7355 kW

9Y1210784INI0010US0

3. PERFORMANCE CURVES

D1005-E4B (3000 rpm)

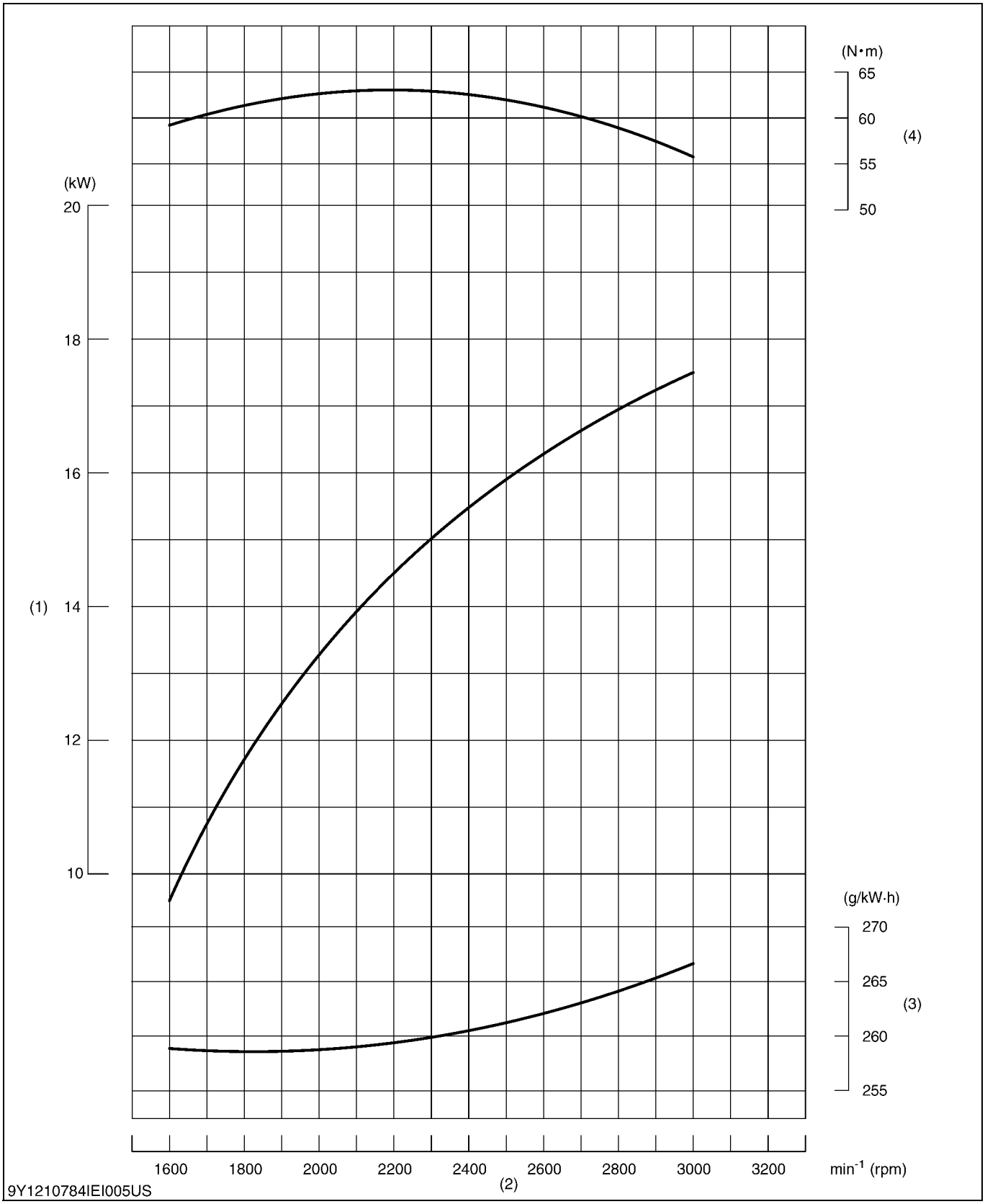

(1) Brake Horsepower
(2) Engine Speed
(3) B.S.F.C. (Brake Specific Fuel Consumption)
(4) Torque

9Y1210784INI0011US0

D1005-E4B (3200 rpm)

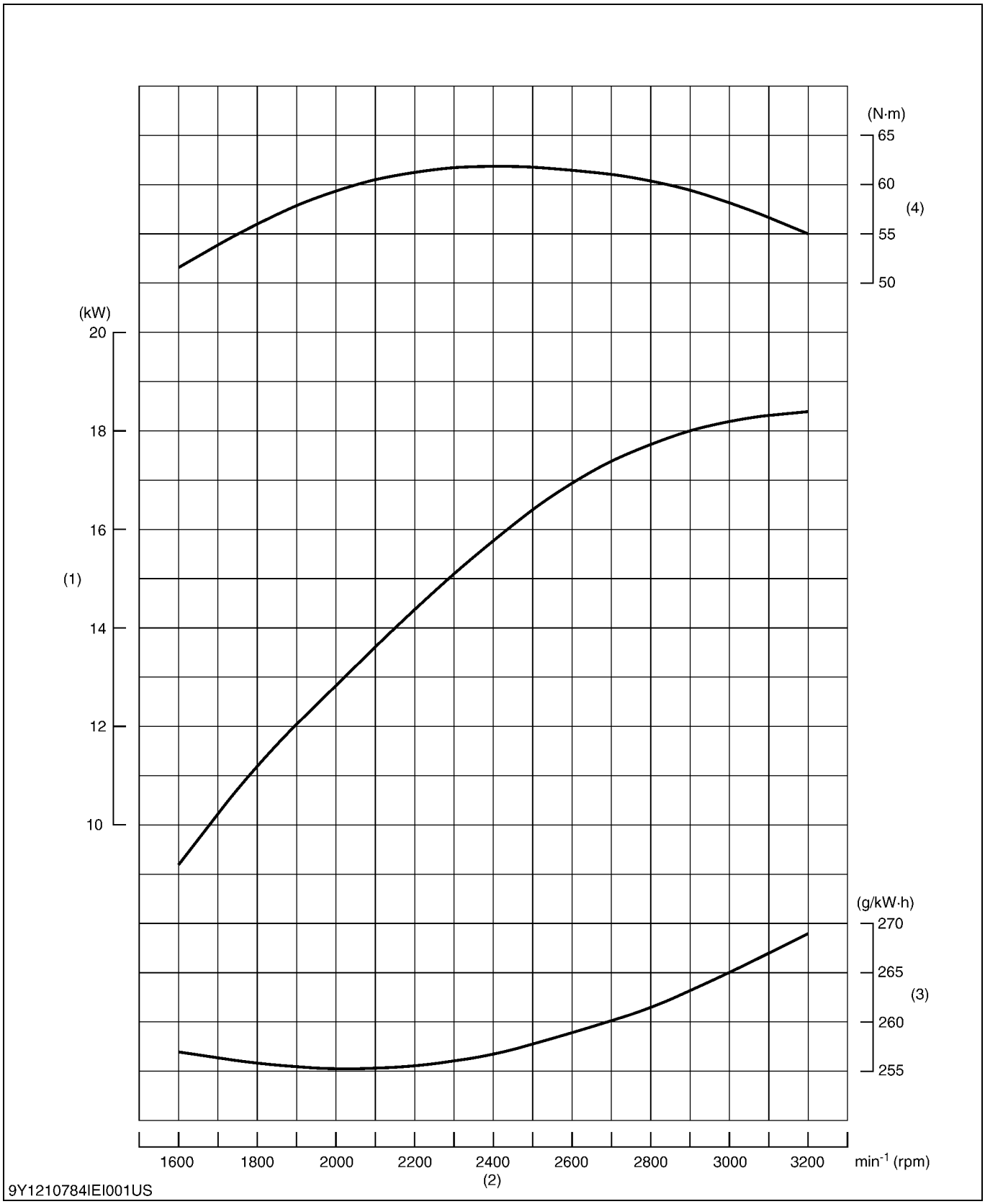

(1) Brake Horsepower (2) Engine Speed (3) B.S.F.C. (Brake Specific Fuel Consumption) (4) Torque

9Y1210784INI0003US0

D1105-E4B

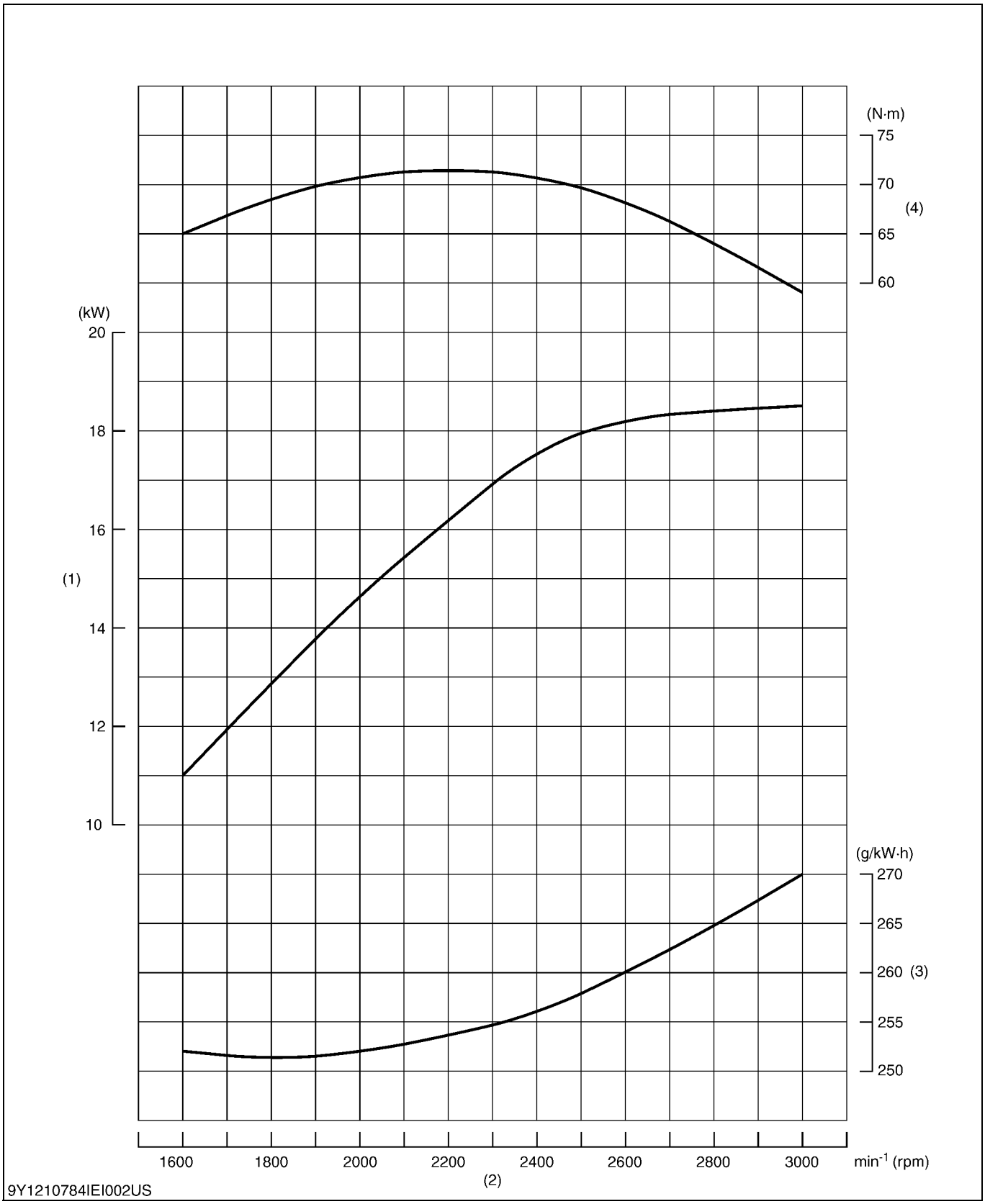

(1) Brake Horsepower (2) Engine Speed (3) B.S.F.C. (Brake Specific Fuel Consumption) (4) Torque

9Y1210784INI0004US0

D1305-E4B

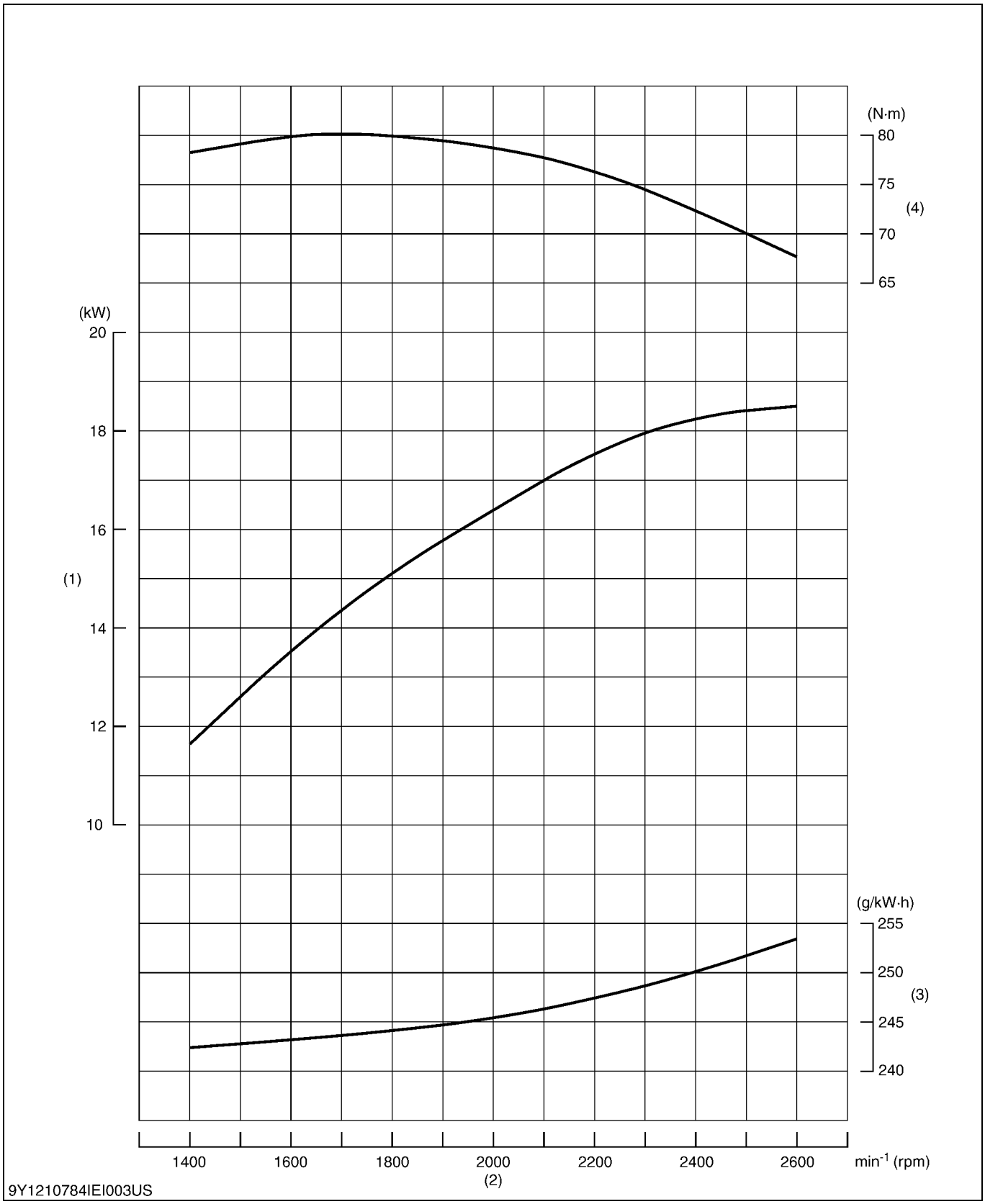

(1) Brake Horsepower (2) Engine Speed (3) B.S.F.C. (Brake Specific Fuel Consumption) (4) Torque

9Y1210784INI0005US0

V1505-E4B

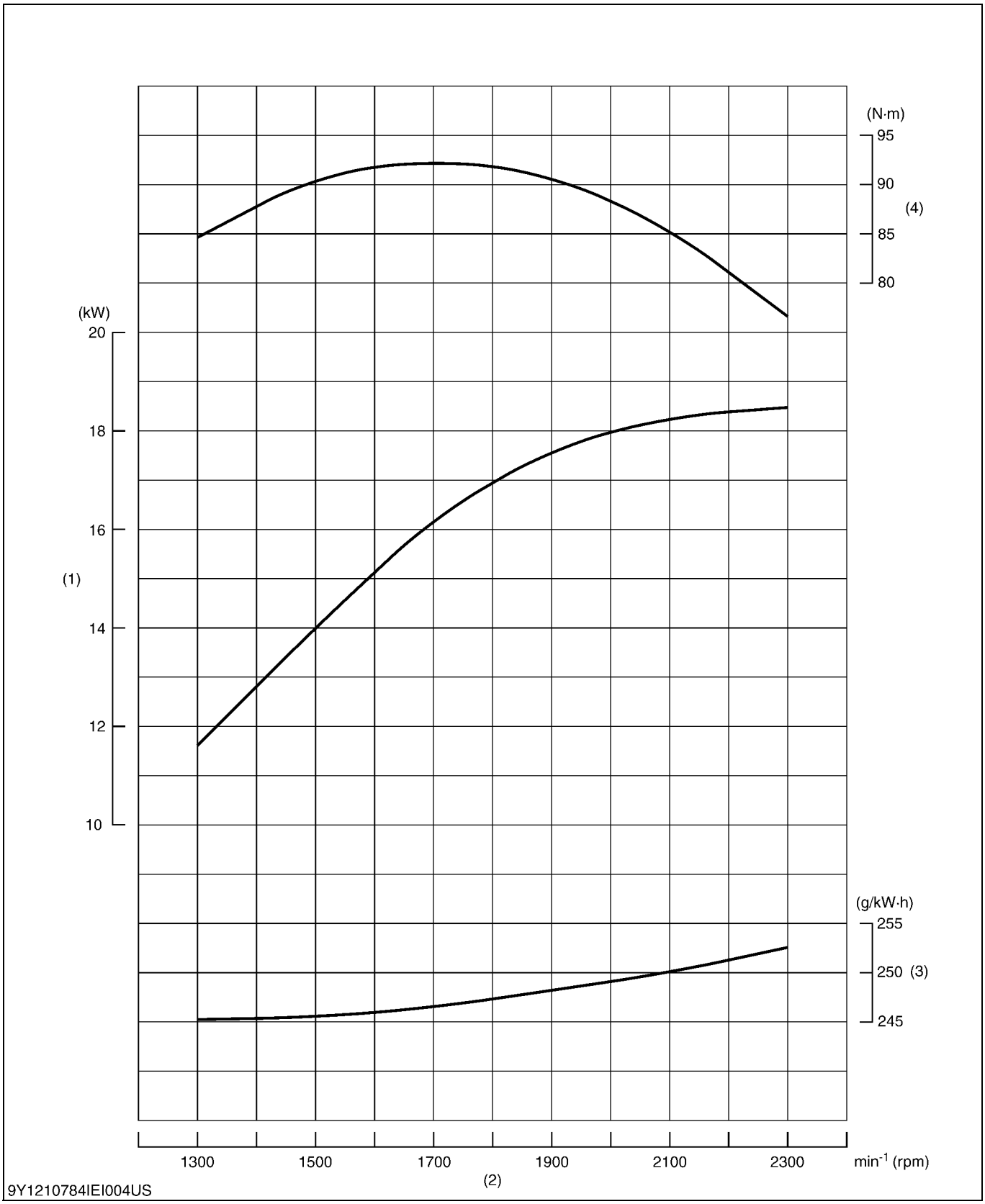

(1) Brake Horsepower (2) Engine Speed (3) B.S.F.C. (Brake Specific Fuel Consumption) (4) Torque

9Y1210784INI0006US0

4. DIMENSIONS

D1005-E4B, D1105-E4B

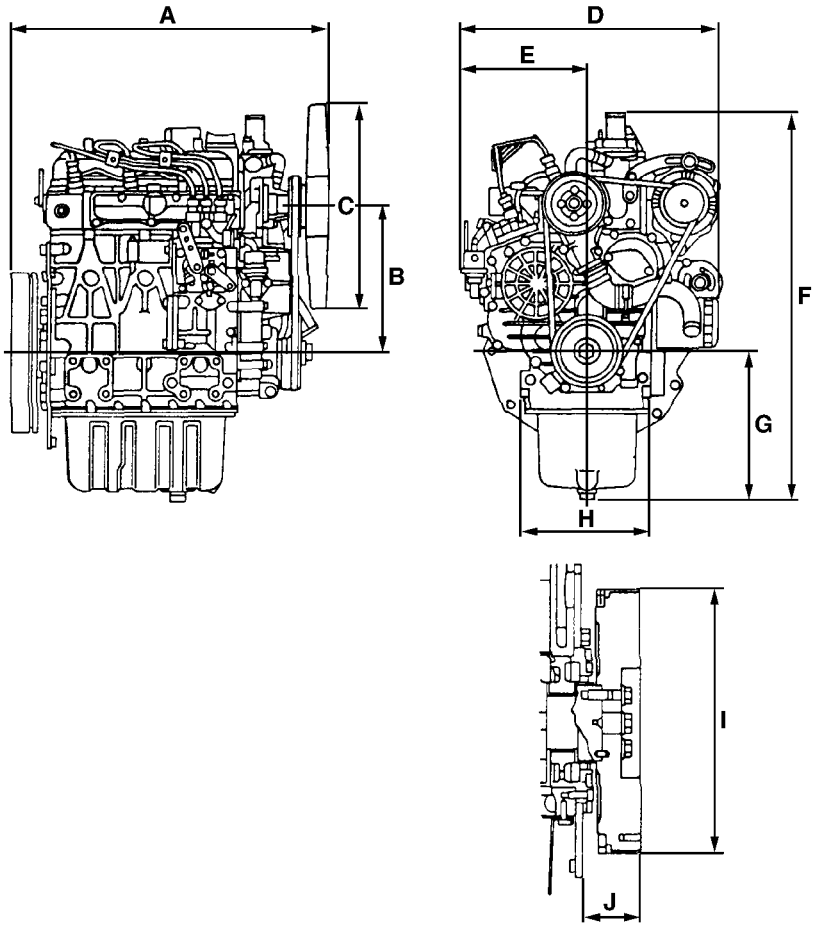

3EEAEACFP001A

	D1005-E4B	D1105-E4B
A	497.8 mm (19.60 in.)	497.8 mm (19.60 in.)
B	230 mm (9.06 in.)	230 mm (9.06 in.)
C	330 mm dia. (13.0 in. dia.)	330 mm dia. (13.0 in. dia.)
D	396 mm (15.6 in.)	396 mm (15.6 in.)
E	194 mm (7.64 in.)	194 mm (7.64 in.)
F	602.0 mm (23.70 in.)	602.0 mm (23.70 in.)
G	233.5 mm (9.193 in.)	233.5 mm (9.193 in.)
H	200 mm (7.87 in.)	200 mm (7.87 in.)
I	250.81 to 251.12 mm dia. (9.8744 to 9.8866 in. dia.)	250.81 to 251.12 mm dia. (9.8744 to 9.8866 in. dia.)
J	56 mm (2.2 in.)	56 mm (2.2 in.)

9Y1210784INI0007US0

D1305-E4B

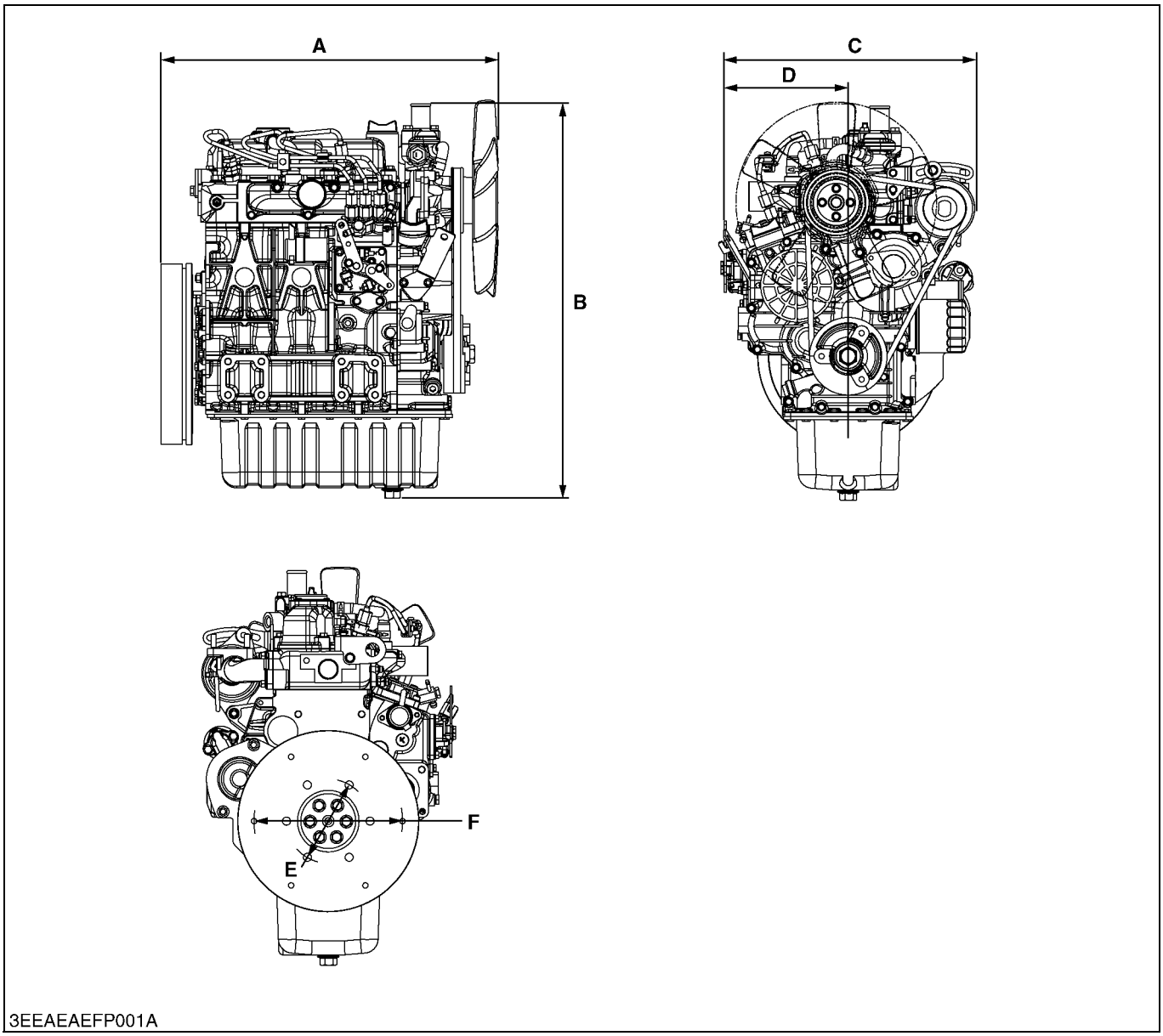

3EEAEAEFP001A

	D1305-E4B
A	497.6 mm (19.59 in.)
B	590.1 mm (23.23 in.)
C	396.0 mm (15.59 in.)
D	185.3 mm (7.295 in.)
E	125 mm dia. (4.92 in. dia.)
F	222.2 mm dia. (8.748 in. dia.)

9Y1210784INI0008US0

V1505-E4B

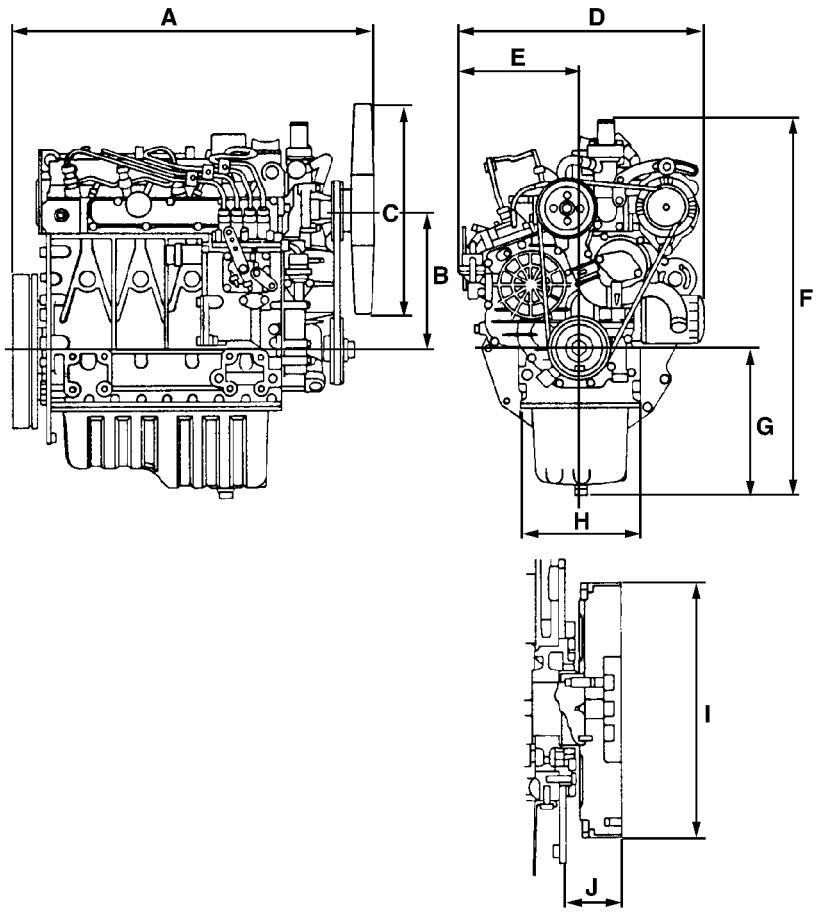

3EEAEACFP002A

	V1505-E4B
A	591.3 mm (23.28 in.)
B	230 mm (9.06 in.)
C	370 mm dia. (14.6 in. dia.)
D	396 mm (15.6 in.)
E	194 mm (7.64 in.)
F	607.0 mm (23.90 in.)
G	238.5 mm (9.390 in.)
H	200 mm (7.87 in.)
I	250.81 to 251.12 mm dia. (9.8744 to 9.8866 in. dia.)
J	56 mm (2.2 in.)

9Y1210784INI0009US0

D1005-E4BG, D1105-E4BG, V1505-E4BG

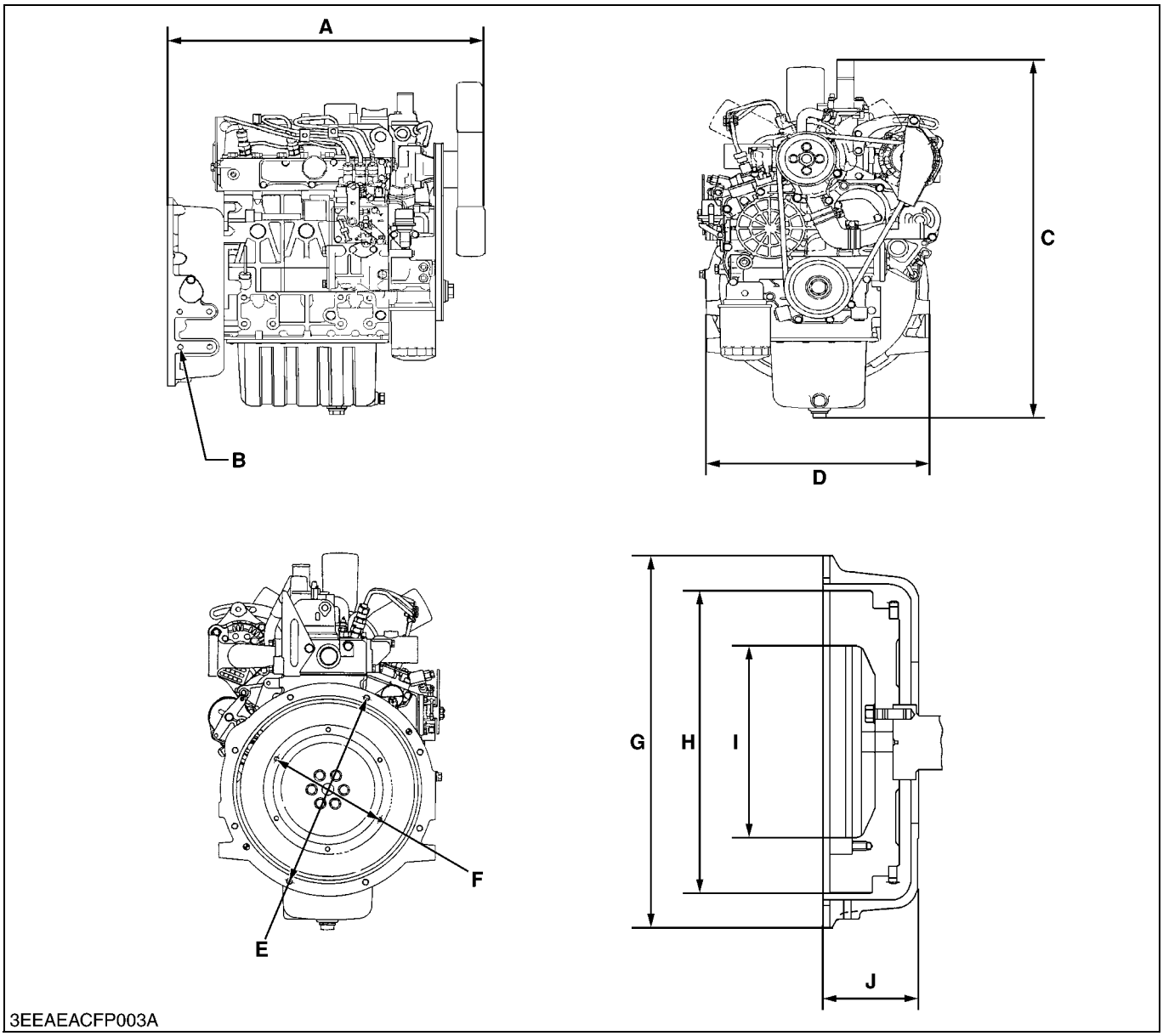

3EEAEACFP003A

	D1005-E4BG	D1105-E4BG	V1505-E4BG
A	546.6 mm (21.52 in.)	546.6 mm (21.52 in.)	634.3 mm (24.97 in.)
B	4-3/8-16 UNC-2B Depth 16 mm (0.63 in.)	4-3/8-16 UNC-2B Depth 16 mm (0.63 in.)	4-3/8-16 UNC-2B Depth 16 mm (0.63 in.)
C	608.7 mm (23.96 in.)	608.7 mm (23.96 in.)	613.7 mm (24.16 in.)
D	360 mm (14.2 in.)	360 mm (14.2 in.)	360 mm (14.2 in.)
E	333.38 mm dia. (13.125 in. dia.)	333.38 mm dia. (13.125 in. dia.)	333.38 mm dia. (13.125 in. dia.)
F	200.02 mm dia. (7.8748 in. dia.)	200.02 mm dia. (7.8748 in. dia.)	200.02 mm dia. (7.8748 in. dia.)
G	356 mm dia. (14.0 in. dia.)	356 mm dia. (14.0 in. dia.)	356 mm dia. (14.0 in. dia.)
H	290 mm dia. (11.4 in. dia.)	290 mm dia. (11.4 in. dia.)	290 mm dia. (11.4 in. dia.)
I	184.2 mm dia. (7.252 in. dia.)	184.2 mm dia. (7.252 in. dia.)	184.2 mm dia. (7.252 in. dia.)
J	98 mm (3.9 in.)	98 mm (3.9 in.)	98 mm (3.9 in.)

9Y1210784INI0012US0

D1305-E4BG

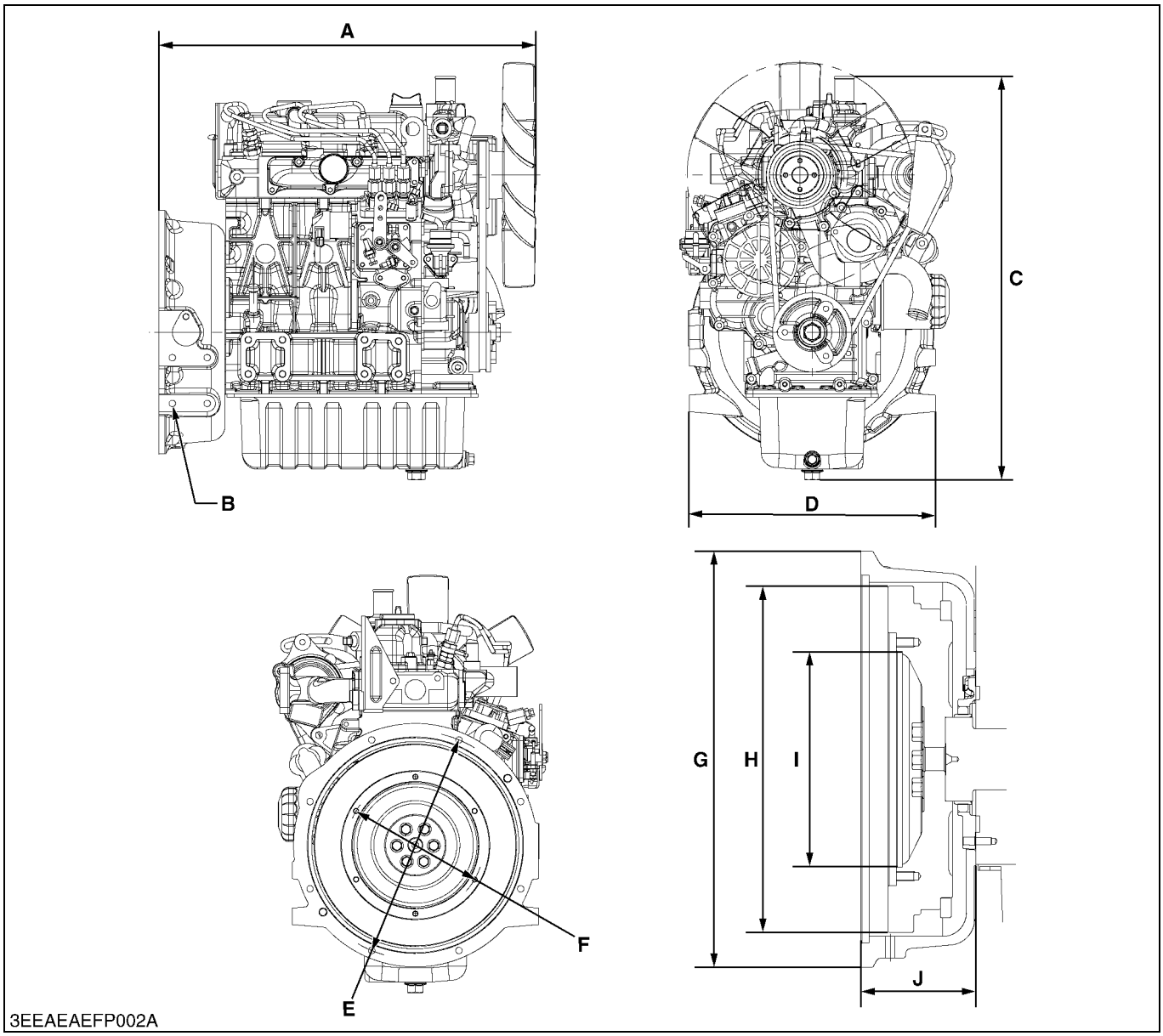

3EEAEAEFP002A

	D1305-E4BG
A	551.3 mm (21.70 in.)
B	4-3/8-16 UNC-2B Depth 16 mm (0.63 in.)
C	590.1 mm (23.23 in.)
D	360 mm (14.2 in.)
E	333.38 mm dia. (13.125 in. dia.)
F	200.02 mm dia. (7.8748 in. dia.)
G	356 mm dia. (14.0 in. dia.)
H	296 mm dia. (11.7 in. dia.)
I	184.2 mm dia. (7.252 in. dia.)
J	98 mm (3.9 in.)

9Y1210784INI0013US0

G GENERAL

GENERAL

CONTENTS

1. ENGINE IDENTIFICATION G-1
   [1] MODEL NAME AND ENGINE SERIAL NUMBER G-1
   [2] E4B ENGINE G-3
   [3] CYLINDER NUMBER G-3
2. GENERAL PRECAUTIONS G-4
3. MAINTENANCE CHECK LIST G-5
4. CHECK AND MAINTENANCE G-7
   [1] DAILY CHECK POINTS G-7
   [2] CHECK POINTS OF INITIAL 50 HOURS G-9
   [3] CHECK POINT OF EVERY 50 HOURS G-11
   [4] CHECK POINTS OF EVERY 100 HOURS G-12
   [5] CHECK POINTS OF EVERY 200 HOURS G-14
   [6] CHECK POINTS OF EVERY 400 HOURS G-16
   [7] CHECK POINTS OF EVERY 500 HOURS G-17
   [8] CHECK POINTS OF EVERY 1 OR 2 MONTHS G-19
   [9] CHECK POINT OF EVERY YEAR G-20
   [10] CHECK POINT OF EVERY 800 HOURS G-21
   [11] CHECK POINTS OF EVERY 1500 HOURS G-22
   [12] CHECK POINTS OF EVERY 3000 HOURS G-23
   [13] CHECK POINTS OF EVERY 2 YEARS G-26
5. SPECIAL TOOLS G-30

1. ENGINE IDENTIFICATION

[1] MODEL NAME AND ENGINE SERIAL NUMBER

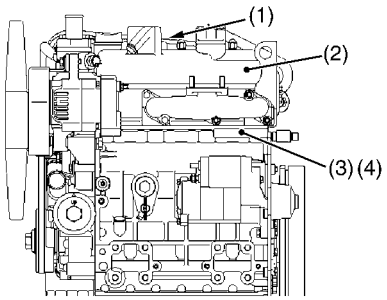

3EEAEAC0P001B

You must identify the engine model name and serial number before you start a job. When you get in touch with the manufacturer, always tell your engine model name and serial number.

Engine Serial Number

The engine serial number is an identified number for the engine.
It appears after the engine model number.
It shows the month and year of manufacture as below.

Engine Series

Number	Series	Number	Series
1	05 Series (Include: WG)	5	Air Cooled Gasoline
2	V3 Series	6	GZ, OC, AC, EA and E Series
3	08 Series	7	03 Series
4	SM Series (Include: WG)	8	07 Series

Year of manufacture

Alphabet or Number	Year	Alphabet or Number	Year
1	2001	F	2015
2	2002	G	2016
3	2003	H	2017
4	2004	J	2018
5	2005	K	2019
6	2006	L	2020
7	2007	M	2021
8	2008	N	2022
9	2009	P	2023
A	2010	R	2024
B	2011	S	2025
C	2012	T	2026
D	2013	V	2027
E	2014		

(1) Engine Label
(2) Emission Label
(3) Engine Model
(4) Serial Number

(To be continued)

(Continued)

Month of manufacture

Month	Engine Lot Number	
January	A0001 ~ A9999	B0001 ~ BZ999
February	C0001 ~ C9999	D0001 ~ DZ999
March	E0001 ~ E9999	F0001 ~ FZ999
April	G0001 ~ G9999	H0001 ~ HZ999
May	J0001 ~ J9999	K0001 ~ KZ999
June	L0001 ~ L9999	M0001 ~ MZ999
July	N0001 ~ N9999	P0001 ~ PZ999
August	Q0001 ~ Q9999	R0001 ~ RZ999
September	S0001 ~ S9999	T0001 ~ TZ999
October	U0001 ~ U9999	V0001 ~ VZ999
November	W0001 ~ W9999	X0001 ~ XZ999
December	Y0001 ~ Y9999	Z0001 ~ ZZ999

* Alphabetical letters "I" and "O" are not used.

(a) (b)(c)(d) (e)
e.g. D1105 - 1 D L A001

(a) Engine Model Name: **D1105**
(b) Engine Series: 1 indicates 05 Series
(c) Year: D indicates 2013
(d) Month: L or M indicates June
(e) Lot Number: (**0001 ~ 9999** or **A001 ~ Z999**)

9Y1210784GEG0001US0

[2] E4B ENGINE

[Example: Engine Model Name D1105-**E4B**-XXXX]

The emission controls previously implemented in various countries to prevent air pollution will be stepped up as Nonroad Emission Standards continue to change. The timing or applicable date of the specific Nonroad Emission regulations depends on the engine output classification.

Over the past several years, KUBOTA has been supplying diesel engines that comply with regulations in the respective countries affected by Nonroad Emission regulations. For KUBOTA Engines, E4B will be the designation that identifies engine models affected by the next emission phase (See the table below).

When servicing or repairing ###-E4B series engines, use only replacement parts for that specific E4B engine, designated by the appropriate E4B KUBOTA Parts List and perform all maintenance services listed in the appropriate KUBOTA Operator's Manual or in the appropriate E4B KUBOTA Workshop Manual. Use of incorrect replacement parts or replacement parts from other emission level engines (for example: E3B engines), may result in emission levels out of compliance with the original E4B design and EPA or other applicable regulations.Please refer to the emission label located on the engine head cover to identify Output classification and Emission Control Information. E4B engines are identified with "EF" at the end of the Model designation, on the US EPA label. Please note: E4B is not marked on the engine.

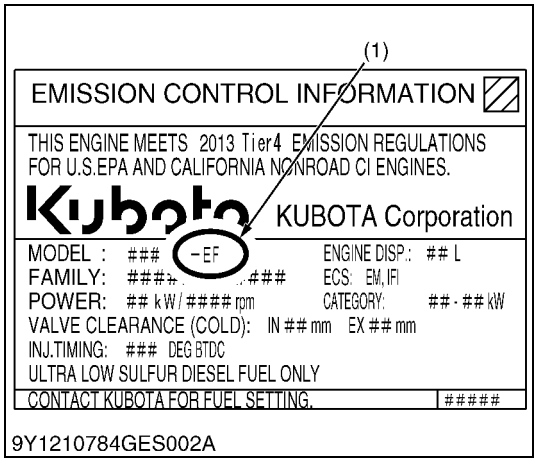

9Y1210784GES002A

Category	Engine output classification	EPA regulation
EF	Less than 19 kW	Tier 4
	From 19 to less than 56 kW	Interim Tier 4
	From 56 to less than 75 kW	Interim Tier 4
	From 75 to less than 130 kW	Interim Tier 4

(1) "E4B" engines are identified with "EF" at the end of the Model designation, on the US EPA label.
"E4B" designates some Interim Tier 4 / Tier 4 models, depending on engine output classification.

9Y1210784GEG0002US0

[3] CYLINDER NUMBER

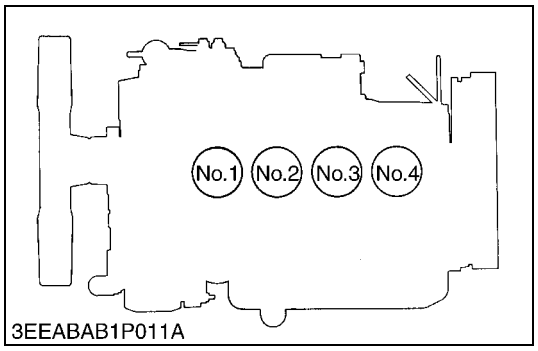

3EEABAB1P011A

You can see the cylinder numbers of KUBOTA diesel engine in the figure.

The sequence of cylinder numbers is No.1, No.2, No.3 and No.4 and it starts from the gear case side.

9Y1210784GEG0003US0

2. GENERAL PRECAUTIONS

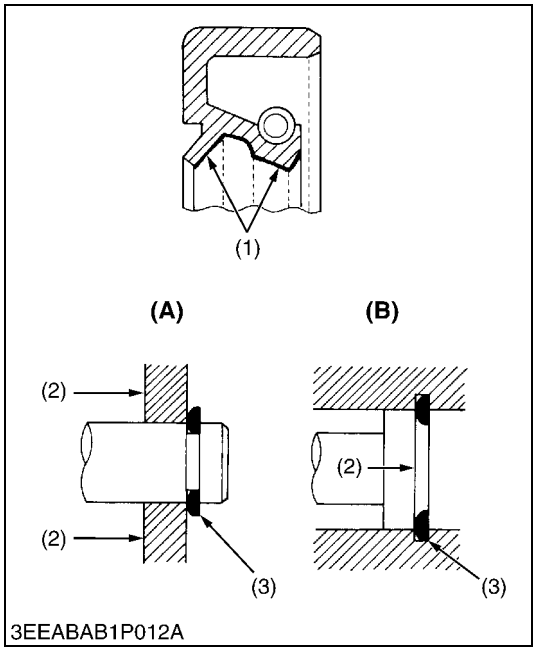

3EEABAB1P012A

- When you disassemble, carefully put the parts in a clean area to make it easy to find the parts.
  You must install the screws, bolts and nuts in their initial position to prevent the reassembly errors.
- When it is necessary to use special tools, use KUBOTA special tools. Refer to the drawings when you make special tools that you do not use frequently.
- Before you disassemble or repair machine, make sure that you always disconnect the ground cable from the battery first.
- Remove oil and dirt from parts before you measure.
- Use only KUBOTA genuine parts for replacement to keep the machine performance and to make sure of safety.
- You must replace the gaskets and O-rings when you assemble again. Apply grease (1) to new O-rings or oil seals before you assemble.
- When you assemble the external or internal snap rings, make sure that the sharp edge (3) faces against the direction from which force (2) is applied.
- Make sure that you try to operate the engine after you repair or assemble it.

(1) Grease
(2) Force
(3) Sharp Edge
(A) External Snap Ring
(B) Internal Snap Ring

9Y1210784GEG0004US0

3. MAINTENANCE CHECK LIST

To make sure that the engine operates safely for a long time, refer to the table below to do regular inspections.

	Item	Service Interval										
		Every										
		50 hrs	100 hrs	200 hrs	400 hrs	500 hrs	1 or 2 months	1 year	800 hrs	1500 hrs	3000 hrs	2 years
*	Checking fuel hoses and clamp bands	☆										
*	Changing engine oil (Oil pan depth: 110 mm (4.33 in.), 125 mm (4.92 in.), 130 mm (5.12 in.))	★		☆								
*	Cleaning air cleaner element (Replace the element after 6 times cleaning)		☆									
	Cleaning fuel filter element		☆									
	Check fan belt tension and damage		☆									
	Checking battery electrolyte level		☆									
*	Replacing oil filter cartridge (Oil pan depth: 110 mm (4.33 in.), 125 mm (4.92 in.), 130 mm (5.12 in.))	★		☆	☆ (BG type)							
	Checking radiator hoses and clamp bands			☆								
*	Checking intake air line			☆								
	Replacing fuel filter cartridge				☆							
	Cleaning water jacket and radiator interior					☆						
	Replacing fan belt					☆						
	Recharging battery						☆					
*	Replacing air cleaner element							☆				
	Checking valve clearance								☆			
*	Checking injection nozzle pressure									☆		
	Checking injection pump										☆	
	Checking injection timing										☆	
	Changing radiator coolant (L.L.C.)											☆
	Replacing radiator hoses and clamp bands											☆
*	Replacing fuel hoses and clamps											☆
*	Replacing intake air line											☆
	Replacing battery											☆

★ Change engine oil and replace oil filter cartridge after the first 50 hours of operation.

* The items listed above (* marked) are registered as emission related critical parts by KUBOTA in the U.S. EPA nonroad emission regulation. As the engine owner, you are responsible for the performance of the required maintenance on the engine according to the above instruction.

Please see the emission Warranty Statement in detail.

9Y1210784GEG0005US0

CAUTION
- **When changing or inspecting, be sure to level and stop the engine.**

NOTE

Engine oil
- **Refer to the following table for the suitable American Petroleum Institute (API) classification of engine oil according to the engine type (with internal EGR, external EGR or non-EGR) and the Fuel Type Used: (Low Sulfur, Ultra Low Sulfur or High Sulfur Fuels).**

Fuel Type	Engine oil classification (API classification)	
	Engines with non-EGR Engines with internal EGR	Engines with external EGR
High Sulfur Fuel [0.05 % (500 ppm) ≤ Sulfur Content < 0.50 % (5000 ppm)]	**CF** (If the "CF-4, CG-4, CH-4, or CI-4" engine oil is used with a high-sulfur fuel, change the engine oil at shorter intervals. (approximately half))	–
Low Sulfur Fuel [Sulfur Content < 0.05 % (500 ppm)] or Ultra Low Sulfur Fuel [Sulfur Content < 0.0015 % (15 ppm)]	**CF**, **CF-4**, **CG-4**, **CH-4** or **CI-4**	**CF** or **CI-4** (Class CF-4, CG-4 and CH-4 engine oils cannot be used on EGR type engines.)

EGR: Exhaust Gas Re-circulation
- **CJ-4 classification oil is intended for use in engines equipped with DPF (Diesel Particulate Filter) and is Not Recommended for use in Kubota E3 specification engines.**
- **Oil used in the engine should have API classification and Proper SAE Engine Oil Viscosity according to the ambient temperatures where the engine is operated.**
- **With strict emission control regulations now in effect, the CF-4 and CG-4 engine oils have been developed for use with low sulfur fuels, for On-Highway vehicle engines. When a Nonroad engine runs on high sulfur fuel, it is advisable to use a "CF or better" classification engine oil with a high Total Base Number (a minimum TBN of 10 is recommended).**

Fuel
- **Cetane Rating: The minimum recommended Fuel Cetane Rating is 45. A cetane rating greater than 50 is preferred, especially for ambient temperatures below −20 °C (−4 °F) or elevations above 1500 m (5000 ft).**
- **Diesel Fuel Specification Type and Sulfur Content % (ppm) used, must be compliant with all applicable emission regulations for the area in which the engine is operated.**
- **Use of diesel fuel with sulfur content less than 0.10 % (1000 ppm) is strongly recommended.**
- **If high-sulfur fuel (sulfur content 0.50 % (5000 ppm) to 1.0 % (10000 ppm)) is used as a diesel fuel, change the engine oil and oil filter at shorter intervals. (approximately half)**
- **DO NOT USE Fuels that have sulfur content greater than 1.0 % (10000 ppm).**
- **Diesel fuels specified to EN 590 or ASTM D975 are recommended.**
- **No.2-D is a distillate fuel of lower volatility for engines in industrial and heavy mobile service. (SAE J313 JUN87)**
- **Since KUBOTA diesel engines of less than 56 kW (75 hp) utilize EPA Tier 4 and Interim Tier 4 standards, the use of low sulfur fuel or ultra low sulfur fuel is mandatory for these engines, when operated in US EPA regulated areas. Therefore, please use No.2-D S500 or S15 diesel fuel as an alternative to No.2-D, and use No.1-D S500 or S15 diesel fuel as an alternative to No.1-D for ambient temperatures below −10 °C (14 °F).**

1) SAE: Society of Automotive Engineers
2) EN: European Norm
3) ASTM: American Society of Testing and Materials
4) US EPA: United States Environmental Protection Agency
5) No.1-D or No.2-D, S500: Low Sulfur Diesel (LSD) less than 500 ppm or 0.05 wt.%
   No.1-D or No.2-D, S15: Ultra Low Sulfur Diesel (ULSD) 15 ppm or 0.0015 wt.%

9Y1210784GEG0006US0

4. CHECK AND MAINTENANCE

[1] DAILY CHECK POINTS

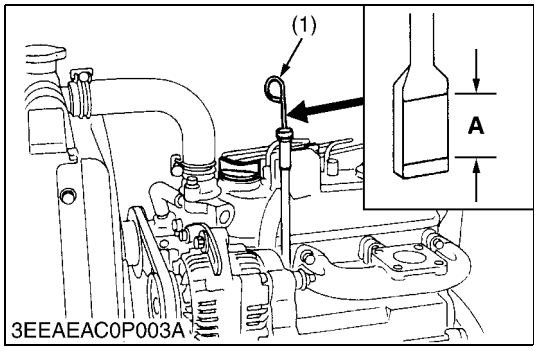

Checking Engine Oil Level

1. Level the engine.
2. To check the oil level, draw out the dipstick (1), wipe it clean, reinsert it, and draw it out again.
   Check to see that the oil level lies **"A"** between the two notches.
3. If the level is too low, add new oil to the specified level.

■ **IMPORTANT**

- **When using an oil of different maker or viscosity from the previous, drain old oil. Never mix two different types of oil.**

■ **NOTE**

- **Be sure to inspect the engine, locating it on a horizontal place. If placed on gradients, accurately, oil quantity may not be measured.**
- **Be sure to keep the oil level between upper and lower limits of the dipstick. Too much oil may cause a drop in output or excessive blow-by gas. On the closed breather type engine in which mist is sucked through port, too much oil may caused oil hammer. While too little oil, may seize the engine's rotating and sliding parts.**

(1) Dipstick **A: Oil Level**

9Y1210784GEG0007US0

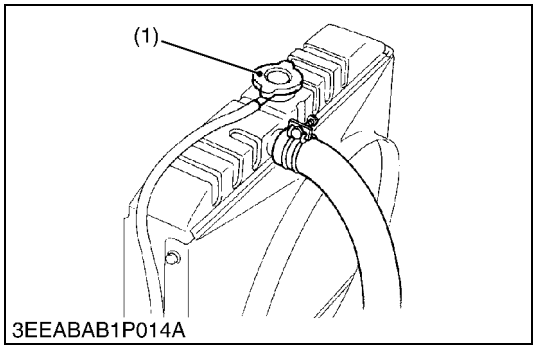

3EEABAB1P014A

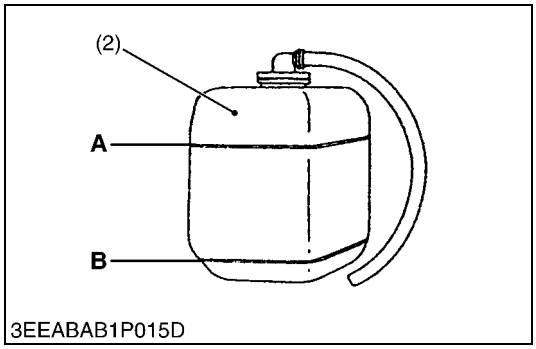

3EEABAB1P015D

Checking and Replenish Coolant

1. Without recovery tank:
   Remove the radiator cap (1) and check to see that the coolant level is just below the port.
   With recovery tank (2):
   Check to see that the coolant level lies between **FULL "A"** and **LOW "B"**.
2. If coolant level is too low, check the reason for decreasing coolant.
   (Case 1)
   If coolant is decreasing by evaporation, replenish only fresh, soft water.
   (Case 2)
   If coolant is decreasing by leak, replenish coolant of the same manufacture and type in the specified mixture ratio (fresh, soft water and L.L.C.). If the coolant brand cannot be identified, drain out all of the remaining coolant and refill with a totally new brand of coolant mix.

CAUTION

- **Do not remove the radiator cap until coolant temperature is below its boiling point. Then loosen the cap slightly to relieve any excess pressure before removing the cap completely.**

IMPORTANT

- **During filling the coolant, air must be vented from the engine coolant passages. The air vents by jiggling the radiator upper and lower hoses.**
- **Be sure to close the radiator cap securely. If the cap is loose or improperly closed, coolant may leak out and the engine could overheat.**
- **Do not use an antifreeze and scale inhibitor at the same time.**
- **Never mix the different type or brand of L.L.C..**

(1) Radiator Cap
(2) Recovery Tank
A: FULL
B: LOW

9Y1210784GEG0008US0

[2] CHECK POINTS OF INITIAL 50 HOURS

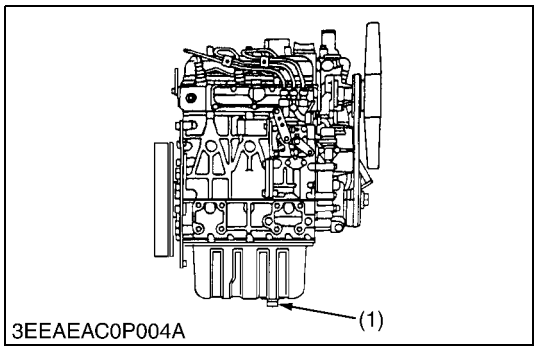

Changing Engine Oil

CAUTION

- **Be sure to stop engine before changing engine oil.**

1. Start and warm up the engine for approx. 5 minutes.
2. Place an oil pan underneath the engine.
3. To drain the used oil, remove the drain plug (1) at the bottom of the engine and drain the oil completely.
4. Screw the drain plug (1).
5. Fill new oil up to upper line on the dipstick.

IMPORTANT

- **When using an oil of different maker or viscosity from the previous one, remove all of the old oil.**
- **Never mix two different types of oil.**
- **Engine oil should have properties of API classification. (See page G-6.)**
- **Use the proper SAE Engine Oil according to ambient temperature.**
- **Upon an oil change, be sure to replace the gasket with new one.**

Above 25 °C (77 °F)	SAE 30 or SAE 10W-30, SAE 10W-40
0 °C to 25 °C (32 °F to 77 °F)	SAE 20 or SAE 10W-30, SAE 10W-40
Below 0 °C (32 °F)	SAE 10W or SAE 10W-30, SAE 10W-40

Models	Oil Pan Depth		
	110 mm (4.33 in.)	125 mm (4.92 in.)	130 mm (5.12 in.)
D1005-E4B/E4BG, D1105-E4B/E4BG	–	5.1 L 1.3 U.S.gals	–
D1305-E4B/E4BG	5.7 L 1.5 U.S.gals	–	–
V1505-E4B/E4BG	–	–	6.7 L 1.8 U.S.gals

Tightening torque	Drain plug with copper gasket	M12 × 1.25	33 to 37 N·m 3.3 to 3.8 kgf·m 24 to 27 lbf·ft
	Drain plug with rubber coated gasket	M22 × 1.5	45 to 53 N·m 4.5 to 5.5 kgf·m 33 to 39 lbf·ft

(1) Drain Plug

9Y1210784GEG0009US0

Replacing Oil Filter Cartridge

CAUTION

- **Be sure to stop the engine before changing filter cartridge.**

1. Remove the oil filter cartridge with the filter wrench.
2. Apply a slight coat of oil onto the new cartridge gasket.
3. To install the new cartridge, screw it in by hand. Over tightening may cause deformation of rubber gasket.
4. After the new cartridge has been replaced, the engine oil normally decrease a little. Thus see that the engine oil does not leak through the seal and be sure to read the oil level on the dipstick. Then, replenish the engine oil up to the specified level.

IMPORTANT

- **To prevent serious damage to the engine, replacement element must be highly efficient. Use only a KUBOTA genuine filter or its equivalent.**

9Y1210784GEG0010US0

[3] CHECK POINT OF EVERY 50 HOURS

[A]

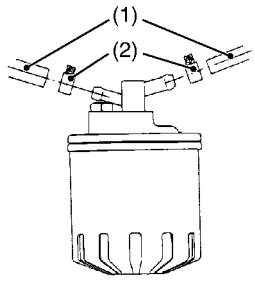

3EEACAA1P057D

[B]

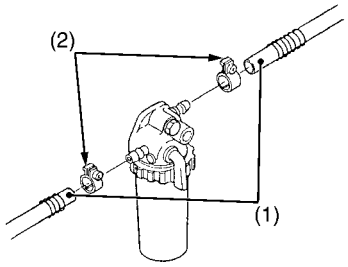

3EEACAA1P058B

[A]

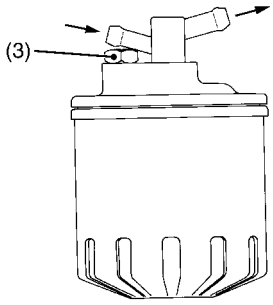

3EEACAA1P059A

[B]

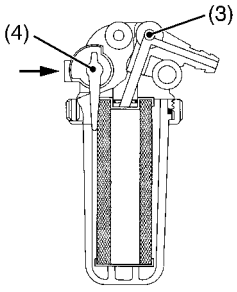

3EEACAA1P060A

Checking Fuel Hose

1. If the clamp (2) is loose, apply oil to the threads and securely retighten it.
2. The fuel hose (1) is made of rubber and ages regardless of the period service.
   Change the fuel hose together with the clamp every two years.
3. However, if the fuel hose and clamp are found to be damaged or deteriorate earlier than two years, then change or remedy.
4. After the fuel hose and the clamp have been changed, bleed the fuel system.

CAUTION

- **Stop the engine when attempting the check and change prescribed above.**

(When bleeding fuel system)

1. Fill the tank with fuel and open the fuel valve (4).
2. Loosen the air vent plug (3) of the fuel filter a few turns.
3. Screw back the plug when bubbles do not come up any more.
4. Open the air vent valve on top of the fuel injection pump.
5. If equipped electrical fuel feed pump, turn the key to AC position and pump the fuel up for 10 to 15 seconds.
   If equipped mechanical fuel feed pump, set the stop lever on stop position and crank the engine for 10 to 15 seconds.
6. Close securely the air vent valve after air bleeding.

■ **NOTE**

- **Always keep the air vent valve on the fuel injection pump closed except when air is vented, or it may cause the engine to stop.**

(1) Fuel Hose
(2) Clamp
(3) Air Vent Plug
(4) Fuel Valve

[A] Cartridge Type
[B] Element Type

9Y1210784GEG0011US0

[4] CHECK POINTS OF EVERY 100 HOURS

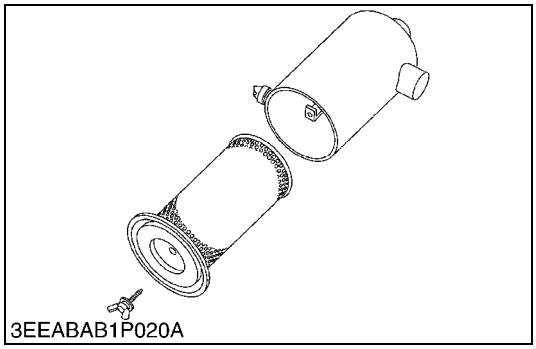
3EEABAB1P020A

Cleaning Air Cleaner Element

1. Remove the air cleaner element.
2. Use clean dry compressed air on the inside of the element.
   Pressure of compressed air must be under 205 kPa (2.1 kgf/cm^2, 30 psi).
   Maintain reasonable distance between the nozzle and the filter.

■ **NOTE**
- **The air cleaner uses a dry element. Never apply oil to it.**
- **Do not run the engine with filter element removed.**
- **Change the element once a year or every 6th cleaning.**

9Y1210784GEG0012US0

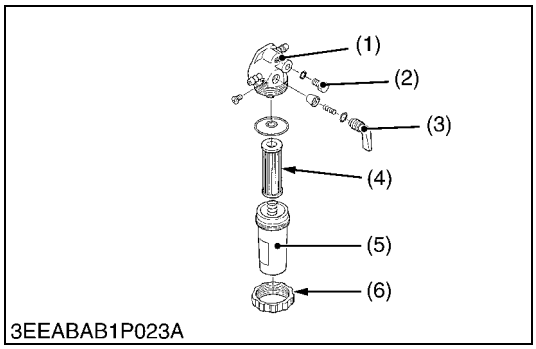

3EEABAB1P023A

Cleaning Fuel Filter (Element Type Only)

1. Close the fuel valve (3).
2. Unscrew the retaining ring (6) and remove the filter cup (5), and rinse the inside with kerosene.
3. Take out the element (4) and dip it in the kerosene to rinse.
4. After cleaning, reassemble the fuel filter, keeping out dust and dirt.
5. Bleed the fuel system.

■ **IMPORTANT**
- **If dust and dirt enter the fuel, the fuel injection pump and injection nozzle will wear quickly. To prevent this, be sure to clean the fuel filter cup (5) periodically.**

(1) Fuel Valve Body
(2) Air Vent Plug
(3) Fuel Valve
(4) Filter Element
(5) Filter Cup
(6) Retaining Ring

9Y1210784GEG0013US0

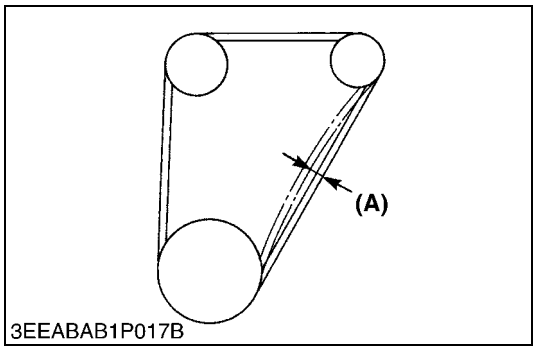

3EEABAB1P017B

Fan Belt Tension

1. Measure the deflection **(A)**, depressing the belt halfway between the fan drive pulley and alternator pulley at specified force 98 N (10 kgf, 22 lbf).
2. If the measurement is not within the factory specifications, loosen the alternator mounting screws and relocate the alternator to adjust.

Deflection **(A)**	Factory specification	7.0 to 9.0 mm 0.28 to 0.35 in.

(A) Deflection

9Y1210784GEG0014US0

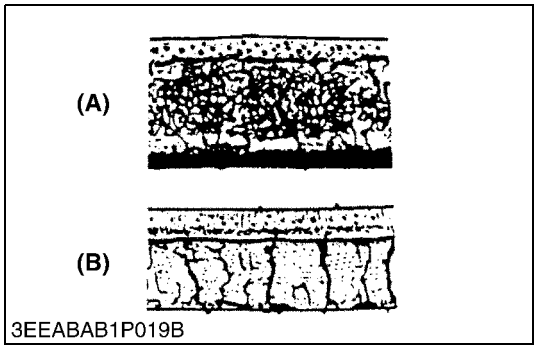

3EEABAB1P019B

Fan Belt Damage and Wear

1. Check the fan belt for damage.
2. If the fan belt is damaged, replace it.
3. Check if the fan belt is worn and sunk in the pulley groove.
4. If the fan belt is nearly worn out and deeply sunk in the pulley groove, replace it.

(A) Good **(B) Bad**

9Y1210784GEG0015US0

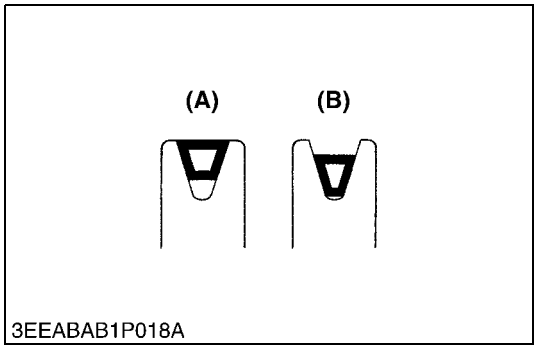

3EEABAB1P018A

Checking Battery Electrolyte Level

1. Check the battery electrolyte level.
2. If the level is below than lower level line (2), and the distilled water to pour level of each cell.

(1) Upper Level Line (2) Lower Level Line

9Y1210784GEG0016US0

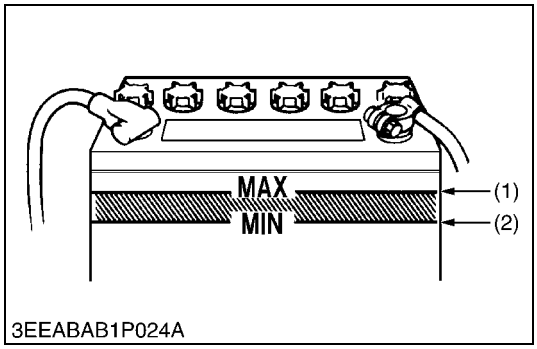

3EEABAB1P024A

[5] CHECK POINTS OF EVERY 200 HOURS

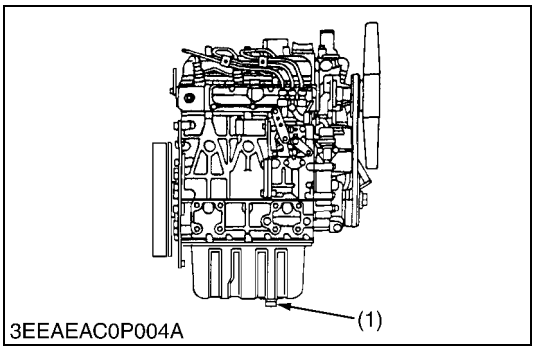

Changing Engine Oil

CAUTION

- **Be sure to stop engine before changing engine oil.**

1. Start and warm up the engine for approx. 5 minutes.
2. Place an oil pan underneath the engine.
3. To drain the used oil, remove the drain plug (1) at the bottom of the engine and drain the oil completely.
4. Screw the drain plug (1).
5. Fill new oil up to upper line on the dipstick.

IMPORTANT

- **When using an oil of different maker or viscosity from the previous one, remove all of the old oil.**
- **Never mix two different types of oil.**
- **Engine oil should have properties of API classification. (See page G-6.)**
- **Use the proper SAE Engine Oil according to ambient temperature.**
- **Upon an oil change, be sure to replace the gasket with new one.**

Above 25 °C (77 °F)	SAE 30 or SAE 10W-30, SAE 10W-40
0 °C to 25 °C (32 °F to 77 °F)	SAE 20 or SAE 10W-30, SAE 10W-40
Below 0 °C (32 °F)	SAE 10W or SAE 10W-30, SAE 10W-40

Models	Oil Pan Depth		
	110 mm (4.33 in.)	**125 mm (4.92 in.)**	**130 mm (5.12 in.)**
D1005-E4B/E4BG, D1105-E4B/E4BG	–	5.1 L 1.3 U.S.gals	–
D1305-E4B/E4BG	5.7 L 1.5 U.S.gals	–	–
V1505-E4B/E4BG	–	–	6.7 L 1.8 U.S.gals

Tightening torque	Drain plug with copper gasket	M12 × 1.25	33 to 37 N·m 3.3 to 3.8 kgf·m 24 to 27 lbf·ft
	Drain plug with rubber coated gasket	M22 × 1.5	45 to 53 N·m 4.5 to 5.5 kgf·m 33 to 39 lbf·ft

(1) Drain Plug

9Y1210784GEG0009US0

Replacing Oil Filter Cartridge

CAUTION

- **Be sure to stop the engine before changing filter cartridge.**

1. Remove the oil filter cartridge with the filter wrench.
2. Apply a slight coat of oil onto the new cartridge gasket.
3. To install the new cartridge, screw it in by hand. Over tightening may cause deformation of rubber gasket.
4. After the new cartridge has been replaced, the engine oil normally decrease a little. Thus see that the engine oil does not leak through the seal and be sure to read the oil level on the dipstick. Then, replenish the engine oil up to the specified level.

IMPORTANT

- **To prevent serious damage to the engine, replacement element must be highly efficient. Use only a KUBOTA genuine filter or its equivalent.**

9Y1210784GEG0010US0

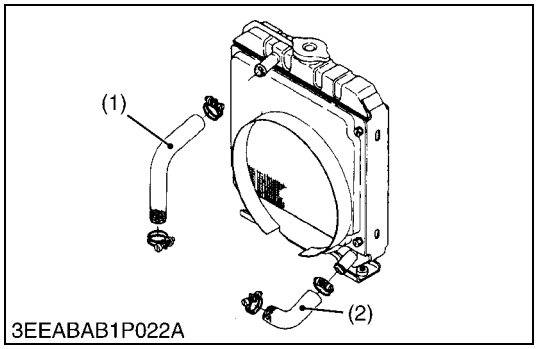

3EEABAB1P022A

Checking Radiator Hoses and Clamp Bands

1. Check to see if the radiator hoses are properly fixed every 200 hours of operation or every six months, whichever comes first.
2. If the clamp is loose, apply oil to the threads and retighten it securely.
3. The water hose is made of rubber and tens to age. It must be replaced every two years. Also replace the clamp and tighten it securely.

(1) Upper Hose (2) Lower Hose

9Y1210784GEG0017US0

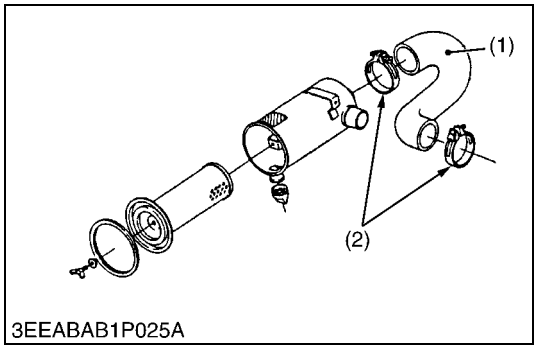

3EEABAB1P025A

Checking Intake Air Line

1. Check to see if the intake air hose(s) are properly fixed every 200 hours of operation.
2. If the clamp is loose, apply oil to the threads and retighten it securely.
3. The intake air hose(s) is made of rubber and tends to age. It must be changed every two years. Also change the clamp and tighten it securely.

IMPORTANT

- **To prevent serious damage to the engine, keep out any dust inside the intake air line.**

(1) Intake Air Hose (2) Clamp

9Y1210784GEG0018US0

[6] CHECK POINTS OF EVERY 400 HOURS

Replacing Oil FIlter Cartridge (for BG Type)

CAUTION

- **Be sure to stop the engine before changing filter cartridge.**

1. Remove the oil filter cartridge with the filter wrench.
2. Apply a slight coat of oil onto the new cartridge gasket.
3. To install the new cartridge, screw it in by hand. Over tightening may cause deformation of rubber gasket.
4. After the new cartridge has been replaced, the engine oil normally decrease a little. Thus see that the engine oil does not leak through the seal and be sure to read the oil level on the dipstick. Then, replenish the engine oil up to the specified level.

IMPORTANT

- **To prevent serious damage to the engine, replacement element must be highly efficient. Use only a KUBOTA genuine filter or its equivalent.**

9Y1210784GEG0050US0

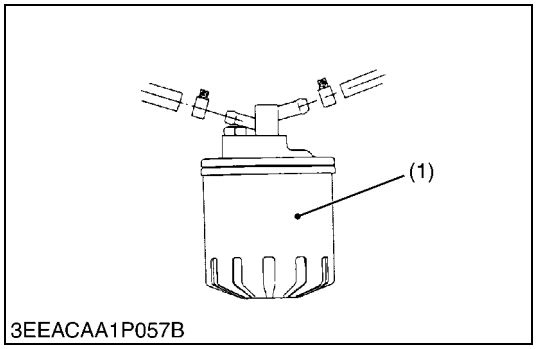

3EEACAA1P057B

Replacing Fuel Filter Cartridge (Cartridge Type)

Water and dust in fuel are collected in the filter cartridge. So, change the filter cartridge every 400 hours service.

1. Remove the used filter cartridge with filter wrench.
2. Apply a thin film of fuel to the surface of new filter cartridge gasket before screwing on.
3. Then tighten enough by hand.
4. Loosen the air vent plug to let the air out.
5. Start engine and check for fuel leakage.

(1) Fuel Filter Cartridge

9Y1210784GEG0019US0

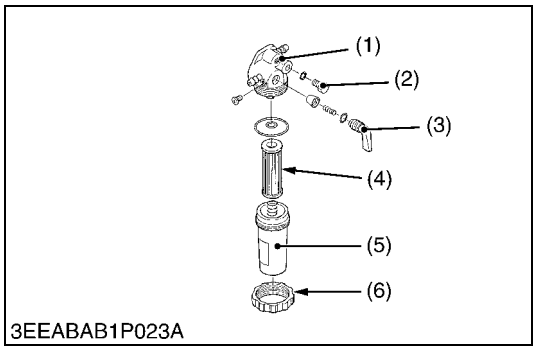

3EEABAB1P023A

Replacing Fuel Filter Element (Element Type)

1. Close the fuel valve (3).
2. Unscrew the retaining ring (6) and remove the filter cup (5), and rinse the inside with kerosene.
3. Replace the filter element (4).
4. Reassemble the fuel filter, keeping out dust and dirt.
5. Bleed the fuel system.

(1) Fuel Valve Body
(2) Air Vent Plug
(3) Fuel Valve
(4) Filter Element
(5) Filter Cup
(6) Retaining Ring

9Y1210784GEG0020US0

[7] CHECK POINTS OF EVERY 500 HOURS

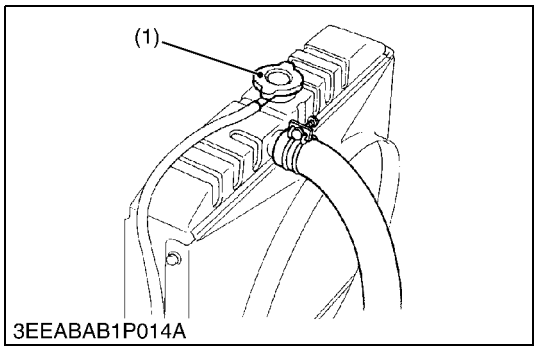

3EEABAB1P014A

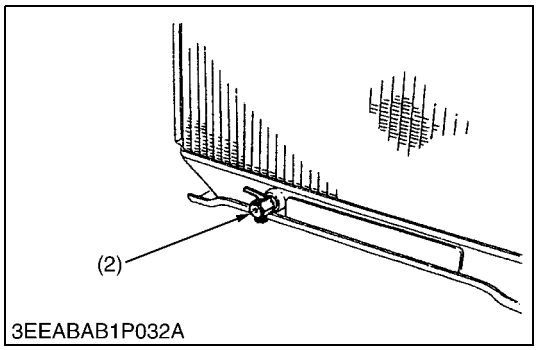

3EEABAB1P032A

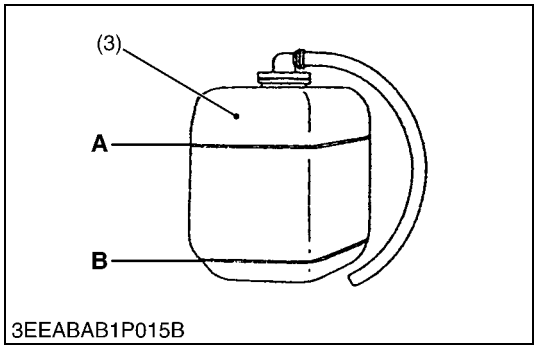

3EEABAB1P015B

Cleaning Water Jacket and Radiator Interior

CAUTION

- **Do not remove the radiator cap when the engine is hot. Then loosen cap slightly to the stop to relieve any excess pressure before removing cap completely.**

1. Stop the engine and let cool down.
2. To drain the coolant, open the radiator drain valve (2) and remove the radiator cap (1). Then radiator cap (1) must be removed to completely drain the coolant. And open the drain valve of engine body.
3. After all coolant is drained, close the drain valve (2).
4. Fill with clean water and cooling system cleaner.
5. Follow directions of the cleaner instruction.
6. After flushing, fill with clean water and anti-freeze until the coolant level is just below the port. Install the radiator cap (1) securely.
7. Fill with coolant up to **FULL "A"** mark on the recovery tank (3).
8. Start and operate the engine for few minutes.
9. Stop the engine and let cool. Check coolant level of radiator and recovery tank (3) and add coolant if necessary.

IMPORTANT

- **Do not start engine without coolant.**
- **Use clean, fresh, soft water and anti-freeze to fill the radiator and recovery tank.**
- **When the anti-freeze is mixed with fresh, soft water, the antifreeze mixing ratio must be less than 50 %.**
- **Securely tighten radiator cap. If the cap is loose or improperly fitted, water may leak out and the engine could overheat.**

(1) Radiator Cap
(2) Drain Valve
(3) Recovery Tank

A: Full
B: Low

9Y1210784GEG0021US0

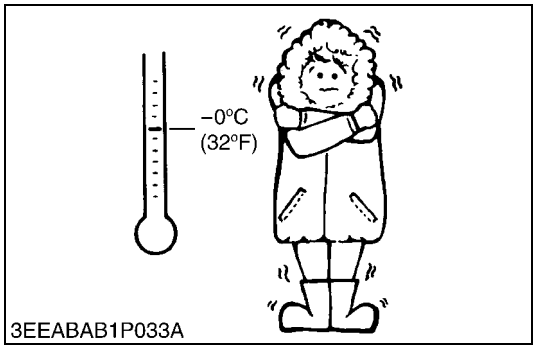

3EEABAB1P033A

Anti-freeze

- There are 2 types of anti-freeze available: use the permanent type (PT) for this engine.
- When you add anti-freeze for the first time, flush the water jacket and radiator interior with clean, soft water several times.
- The brand of the anti-freeze and the ambient temperature have an effect on the procedure to mix water and anti-freeze. Refer to the SAE J1034 standard, especially to the SAE J814c.
- Mix the anti-freeze with clean, soft water, and then fill into the radiator.

■ **IMPORTANT**

- **Make sure that when you mix the anti-freeze and water, the ratio of anti-freeze is less than 50 %.**

Vol % Anti-freeze	Freezing Point		Boiling Point*	
	°C	°F	°C	°F
40	−24	−11	106	223
50	−37	−35	108	226

* At 1.01 × 100000 Pa (760 mmHg) pressure (atmospheric). Use a radiator pressure cap that lets the pressure collect in the cooling system to get a higher boiling point.

■ **NOTE**

- **The above data is the industrial standards that shows the minimum glycol content necessary in the concentrated anti-freeze.**
- **When the coolant level decreases because of evaporation, add clean, soft water only to keep the anti-freeze mixing ratio less than 50 %. If there is a leakage, add anti-freeze and clean, soft water in the specified mixing ratio.**
- **The anti-freeze absorbs moisture. Keep new anti-freeze in a tightly sealed container.**
- **Do not use the radiator cleaning agents after you add anti-freeze to the coolant. Anti-freeze contains an anti-corrosive agent, which reacts with the radiator cleaning agent to make sludge and cause damages to the engine parts.**

9Y1210784GEG0022US0

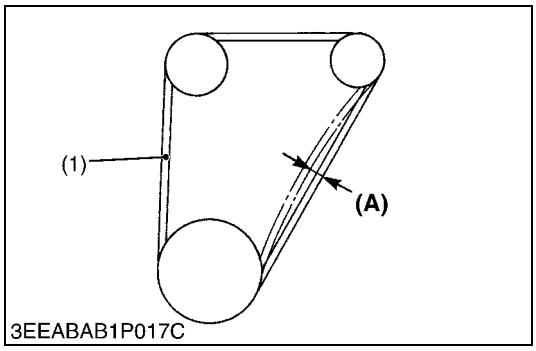

3EEABAB1P017C

Replacing Fan Belt

1. Remove the alternator.
2. Remove the fan belt (1).
3. Replace new fan belt.
4. Install the alternator.
5. Check the fan belt tension.

Deflection **(A)**	Factory specification	7.0 to 9.0 mm / 98 N 0.28 to 0.35 in. / 98 N (10 kgf, 22 lbf)

(1) Fan Belt **(A) Deflection**

9Y1210784GEG0023US0

[8] CHECK POINTS OF EVERY 1 OR 2 MONTHS

Recharging

CAUTION

- **When the battery is being activated, hydrogen and oxygen gases in the battery are extremely explosive. Keep open sparks and flames away from the battery at all times, especially when charging the battery.**
- **When charging battery, remove battery vent plugs.**
- **When disconnecting the cable from the battery, start with the negative terminal first. When connecting the cable to the battery, start with the positive terminal first.**
- **Never check battery charge by placing a metal object across the posts.**
  Use a voltmeter or hydrometer.

(1) Slow Charging

1. Add distilled water if the electrolyte level is low. When charging, the amount of electrolyte should be slightly lower than the specified level to prevent overflow.
2. Connect the battery to the charging unit, following the manufacture's instructions.
3. As the electrolyte generates gas while charging, remove all port caps.
4. The electrolyte temperature must not exceed 40 °C (104 °F) during charging.
   If it exceed 40 °C (104 °F), decrease the charging amperage or stop charging for a while.
5. When charging several batteries in series, charge at the rate of the smallest battery in the line.

(2) Quick Charging

1. Determine the proper charging current and charging time with the tester attached to the quick charger.
2. Determine the proper charging current as 1/1 of the battery capacity. If the battery capacity exceeds 50 Ah, consider 50 A as the maximum.

■ **Precaution for Operating a Quick Charger**

- Operate with a quick charger differs according to the type. Consult the instruction manual and use accordingly.

9Y1210784GEG0024US0

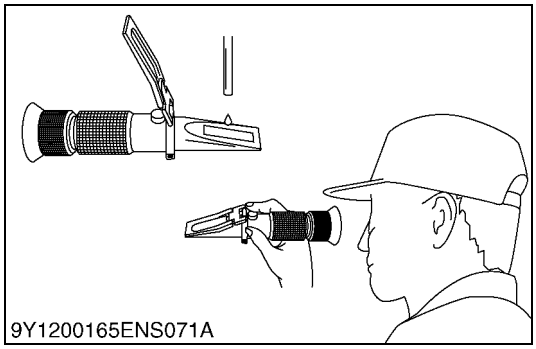
9Y1200165ENS071A

Battery Specific Gravity

1. Measure the specific gravity of the electrolyte in each cell with a battery and coolant tester.
2. If the electrolyte temperature is different from the one that the battery and coolant tester calibrated, correct the specific gravity measurement. Use the formula below in **(Reference)**.
3. If the specific gravity is less than 1.215 (after it is corrected for temperature), charge or replace the battery.
4. If the specific gravity is different between 2 cells by more than 0.05, replace the battery.

(Reference)

- The specific gravity changes with temperature.
  To be accurate, the specific gravity decreases by 0.0007 when temperature increases by 1 °C (decreases by 0.0004 when temperature increases by 1 °F), increases by 0.0007 when temperature decreases by 1 °C (increases by 0.0004 when temperature decreases by 1 °F). Thus, if you refer to 20 °C (68 °F), correct the specific gravity reading by the formula below:
  – Specific gravity at 20 °C = Measured value + 0.0007 × (electrolyte temperature −20 °C)
  – Specific gravity at 68 °F = Measured value + 0.0004 × (electrolyte temperature −68 °F)

Specific Gravity	State of Charge
1.260 Sp. Gr.	100 % Charged
1.230 Sp. Gr.	75 % Charged
1.200 Sp. Gr.	50 % Charged
1.170 Sp. Gr.	25 % Charged
1.140 Sp. Gr.	Very Little Useful Capacity
1.110 Sp. Gr.	Discharged

At an electrolyte temperature of 20 °C (68 °F)

9Y1210784GEG0025US0

[9] CHECK POINT OF EVERY YEAR

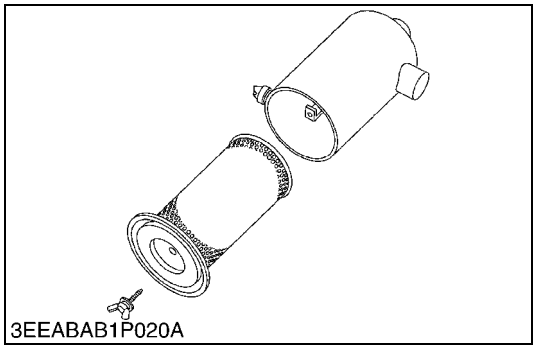
3EEABAB1P020A

Replacing Air Cleaner Element

1. Remove used air cleaner element.
2. Replace new air cleaner element.

■ **NOTE**

- **The air cleaner uses a dry element. Never apply oil to it.**
- **Do not run the engine with filter element removed.**

9Y1210784GEG0026US0

[10] CHECK POINT OF EVERY 800 HOURS

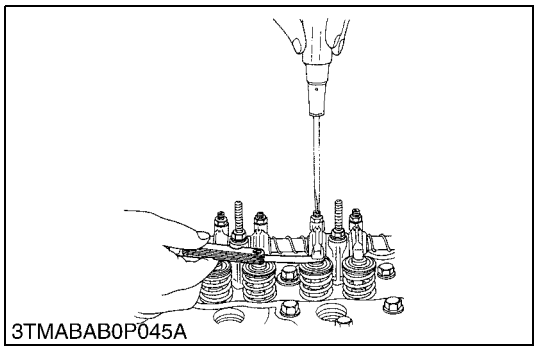
3TMABAB0P045A

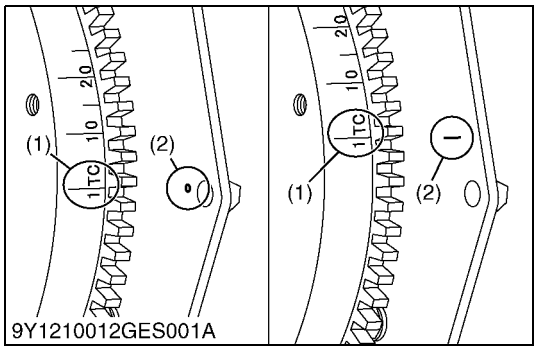

9Y1210012GES001A

Checking Valve Clearance

■ **IMPORTANT**

- **Valve clearance must be checked and adjusted when engine is cold.**

1. Remove the cylinder head cover and the glow plugs.
2. Align the **"1TC"** mark (1) on the flywheel and alignment mark (2) on the rear end plate so that the No. 1 piston comes to the compression top dead center.
3. Check the following valve clearance marked with "☆" using a feeler gauge.
4. If the clearance is not within the factory specifications, adjust with the adjusting screw.
5. Then turn the flywheel 6.28 rad (360 °), and align the **"1TC"** mark (1) on the flywheel and alignment mark (2) on the rear end plate so that the No. 1 piston comes to the overlap position.
6. Check the following valve clearance marked with "☆" using a feeler gauge.
7. If the clearance is not within the factory specifications, adjust with the adjusting screw.

Adjustable Cylinder Location of Piston		3 cylinder		4 cylinder	
		IN.	EX.	IN.	EX.
When No. 1 piston is at compression top dead center	1	☆	☆	☆	☆
	2		☆	☆	
	3	☆			☆
	4				
When No. 1 piston is at overlap position	1				
	2	☆			☆
	3		☆	☆	
	4			☆	☆

Valve clearance	Factory specification	0.145 to 0.185 mm 0.00571 to 0.00728 in.

■ **NOTE**

- **The sequence of cylinder numbers is given as No. 1, No. 2, No. 3 and No. 4 starting from the gear case side.**
- **After adjusting the valve clearance, secure the adjusting screw with the lock nut.**

(1) **"1TC"** Mark (2) Alignment Mark

9Y1210784GEG0027US0

[11] CHECK POINTS OF EVERY 1500 HOURS

CAUTION

- **Check the injection pressure and condition after confirming that there is nobody standing in the direction the fume goes.**
  If the fume from the nozzle directly contacts the human body, cells may be dest oyed and blood poisoning may be caused.

9Y1210784GEG0028US0

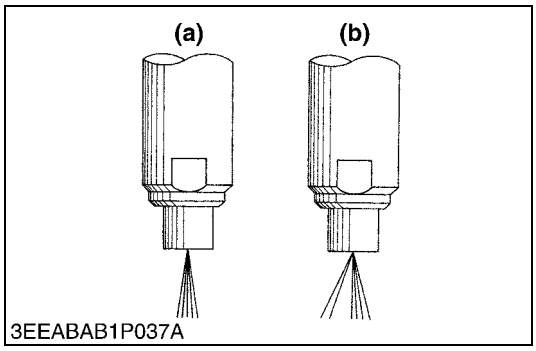

3EEABAB1P037A

Nozzle Spraying Condition

1. Set the injection nozzle to a nozzle tester, and check the nozzle spraying condition.
2. If the spraying condition is damaged, replace the nozzle piece.

(a) Good **(b) Bad**

9Y1210784GEG0029US0

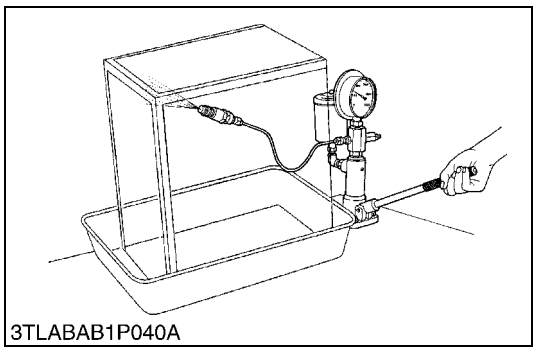
3TLABAB1P040A

Fuel Injection Pressure

1. Set the injection nozzle to a nozzle tester.
2. Slowly move the tester handle to measure the pressure at which fuel begins jetting out from the nozzle.
3. If the measurement is not within the factory specifications, replace the adjusting washer in the nozzle holder to adjust it.

Fuel injection pressure	Factory specification	13.73 to 14.70 MPa 140.0 to 150.0 kgf/cm^2 1992 to 2133 psi

9Y1210784GEG0030US0

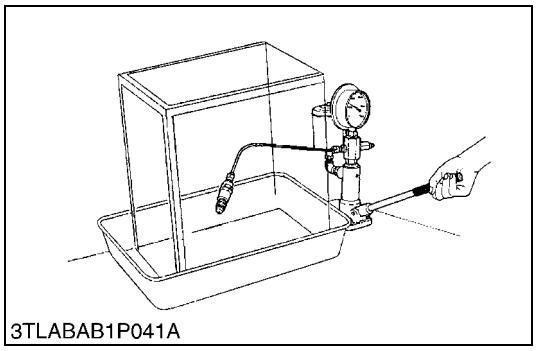
3TLABAB1P041A

Valve Seat Tightness

1. Set the injection nozzle to a nozzle tester.
2. Raise the fuel pressure, and keep at 12.75 MPa (130 kgf/cm^2, 1849 psi) for 10 seconds.
3. If any fuel leak is found, replace the nozzle piece.

Valve seat tightness	Factory specification	No fuel leak at 12.75 MPa 130.0 kgf/cm^2 1849 psi

9Y1210784GEG0031US0

[12] CHECK POINTS OF EVERY 3000 HOURS

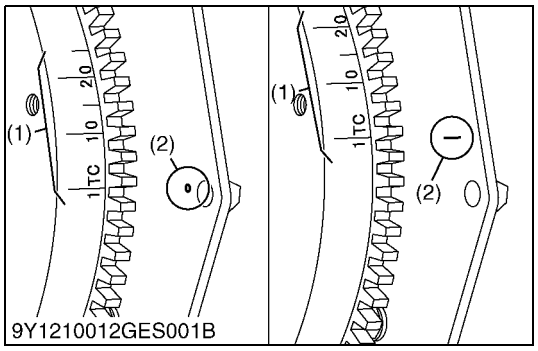

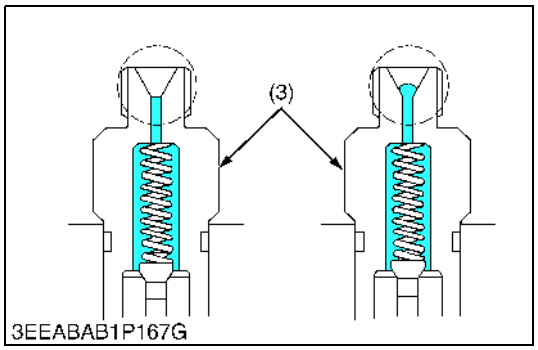

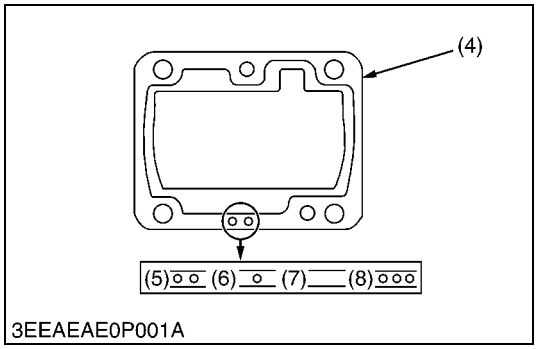

Injection Timing

1. Remove the injection pipes.
2. Remove the engine stop solenoid.
3. Turn the flywheel counterclockwise (viewed from flywheel side) until the fuel fills up to the hole of the delivery valve holder (3) for No. 1 cylinder.
4. After the fuel fills up to the hole of the delivery valve holder for No.1 cylinder, turn back (clockwise) the flywheel around 1.6 rad (90 °).
5. Turn the flywheel counterclockwise to set at around 0.44 rad (25 °) before T.D.C..
6. Slowly turn the flywheel counterclockwise and stop turning when the fuel begins to come up, to get the present injection timing.
7. Check to see the degree on flywheel.
   The flywheel gas mark **"1TC"**, **"10"** and **"20"** for the crank angle before the top dead center of No. 1 cylinder.
8. If injection timing is out of adjustment, readjust the timing with shims.

Injection timing (3000 min^{-1}(rpm))	Factory specification	D1005-E4B	0.3011 to 0.3272 rad (17.25 to 18.75 °) before T.D.C.
Injection timing (3200 min^{-1}(rpm))		D1005-E4B	0.3360 to 0.3621 rad (19.25 to 20.75 °) before T.D.C.
Injection timing (3000 min^{-1}(rpm))		D1105-E4B	0.3011 to 0.3272 rad (17.25 to 18.75 °) before T.D.C.
Injection timing (2600 min^{-1}(rpm))		D1305-E4B	0.2662 to 0.2923 rad (15.25 to 16.75 °) before T.D.C.
Injection timing (2300 min^{-1}(rpm))		V1505-E4B	0.2313 to 0.2574 rad (13.25 to 14.75 °) before T.D.C.
Injection timing (1800 min^{-1}(rpm))		D1505-E4BG, D1105-E4BG	0.2575 to 0.2836 rad (14.75 to 16.25 °) before T.D.C.
Injection timing (1800 min^{-1}(rpm))		D1305-E4BG, V1505-E4BG	0.2487 to 0.2748 rad (14.25 to 15.75 °) before T.D.C.

(1) Timing Line
(2) Alignment Mark
(3) Delivery Valve Holder
(4) Shim (Soft Metal Gasket Shim)
(5) Two-holes: 0.20 mm (0.0079 in.)
    Two-holes: 0.175 mm (0.00689 in.)
(6) One-hole: 0.25 mm (0.0098 in.)
(7) Without hole: 0.30 mm (0.012 in.)
(8) Three-holes: 0.35 mm (0.014 in.)

(To be continued)

(Continued)

■ **NOTE**

- **The liquid gasket is not required for assembling.**
- **Shims are available in thickness of 0.20 mm (0.0079 in.), 0.25 mm (0.0098 in.), 0.30 mm (0.012 in.), 0.35 mm (0.014 in.) and 0.175 mm (0.00689 in.). Combine these shims for adjustments.**
- **Addition or reduction of shim (0.025 mm, 0.00098 in.) delays or advances the injection timing by approx. 0.0044 rad (0.25 °).**
- **In disassembling and replacing the injection pump, be sure to use the same number of new shims with the same thickness.**
- **The 0.175 mm thick shim is coated only on the lower face. Therefore, do not use the 0.175 mm thick shim as the top shim of the combination (injection pump side), because this can cause oil leakage.**

9Y1210784GEG0032US0

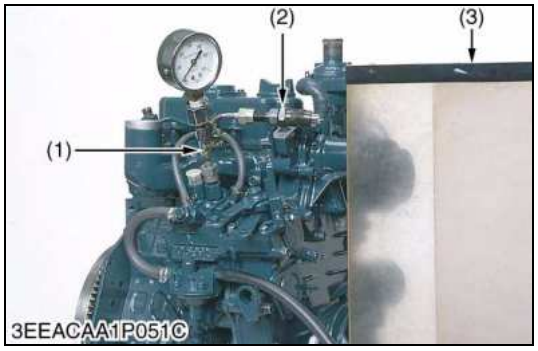

Checking Injection Pump

(Fuel Tightness of Pump Element)

1. Remove the engine stop solenoid.
2. Remove the injection pipes and glow plugs.
3. Install the injection pump pressure tester to the injection pump.
4. Install the injection nozzle (2) jetted with the proper injection pressure to the injection pump pressure tester (1). (Refer to the photo.)
5. Set the speed control lever to the maximum speed position.
6. Run the starter to increase the pressure.
7. If the pressure can not reach the allowable limit, replace the pump with new one or repair with a Kubota-authorized pump service shop.

(Fuel Tightness of Delivery Valve)

1. Remove the engine stop solenoid.
2. Remove the injection pipes and glow plugs.
3. Set a pressure tester to the fuel injection pump.
4. Install the injection nozzle (2) jetted with the proper injection pressure to the injection pump pressure tester (1).
5. Run the starter to increase the pressure.
6. Stop the starter when the fuel jets from the injection nozzle. After that, turn the flywheel by the hand and raise the pressure to approx. 13.73 MPa (140.0 kgf/cm^2, 1991 psi).
7. Now turn the flywheel back about half a turn (to keep the plunger free). Maintain the flywheel at this position and clock the time taken for the pressure to drop from 13.73 to 12.75 MPa (from 140.0 to 130.0 kgf/cm^2, from 1991 to 1849 psi).
8. Measure the time needed to decrease the pressure from 13.73 to 12.75 MPa (140.0 to 130.0 kgf/cm^2, 1991 to 1849 psi).
9. If the measurement is less than allowable limit, replace the pump with new one or repair with a Kubota-authorized pump service shop.

Fuel tightness of pump element	Allowable limit	13.73 MPa 140.0 kgf/cm^2 1991 psi
Fuel tightness of delivery valve	Factory specification	10 seconds 13.73 → 12.75 MPa 140.0 → 130.0 kgf/cm^2 1991 → 1849 psi
	Allowable limit	5 seconds 13.73 → 12.75 MPa 140.0 → 130.0 kgf/cm^2 1991 → 1849 psi

■ **NOTE**

- **Never try to disassemble the injection pump assembly. For repairs, you are strongly requested to contact a Kubotaauthorized pump service shop.**

(1) Injection Pump Pressure Tester
(2) Injection Nozzle
(3) Protection Cover for Jetted Fuel

9Y1210784GEG0033US0

[13] CHECK POINTS OF EVERY 2 YEARS

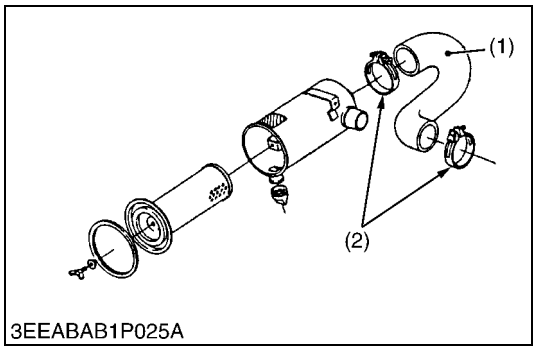

3EEABAB1P025A

Replacing Intake Air Line

1. Loosen the clamp (2).
2. Remove the intake air hose (1) and clamp (2).
3. Replace new intake air hose (1) and new clamp (2).
4. Tighten the clamp (2).

■ **NOTE**

- **To prevent serious damage to the engine, keep out any dust inside the intake air line.**

(1) Intake Air Hose (2) Clamp

9Y1210784GEG0034US0

Replacing Battery

CAUTION

- **When the battery is being activated, hydrogen and oxygen gases in the battery are extremely explosive. Keep open sparks and flames away from the battery at all times, especially when charging the battery.**
- **When charging battery, remove battery vent plugs.**
- **When disconnecting the cable from the battery, start with the negative terminal first. When connecting the cable to the battery, start with the positive terminal first.**
- **Never check battery charge by placing a metal object across the posts.**

1. Disconnect the negative terminal and positive terminal.
2. Remove the battery holder.
3. Remove the used battery.
4. Replace the new battery.
5. Tighten the battery holder.
6. Connect the positive terminal.
7. Connect the negative terminal.

9Y1210784GEG0035US0

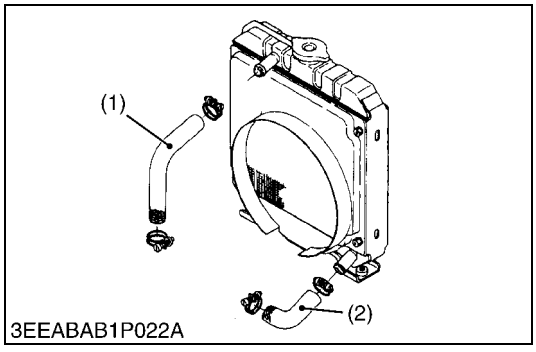

3EEABAB1P022A

Replacing Radiator Hoses and Clamp Bands

CAUTION

- **Do not remove the radiator cap when the engine is hot. Then loosen cap slightly to the stop to relieve any excess pressure before removing cap completely.**

1. Drain the coolant.
2. Loosen the clamp bands.
3. Remove the upper hose (1) and lower hose (2).
4. Replace new upper / lower hose (1), (2) and clamp bands.
5. Tighten the clamp bands.
6. Fill with clean water and anti-freeze until the coolant level is just below the port. Install the radiator cap securely.

(1) Upper Hose (2) Lower Hose

9Y1210784GEG0036US0

[A]

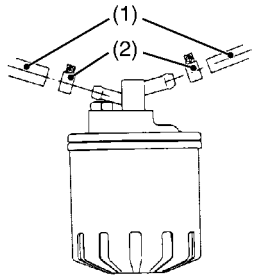

3EEACAA1P057D

[B]

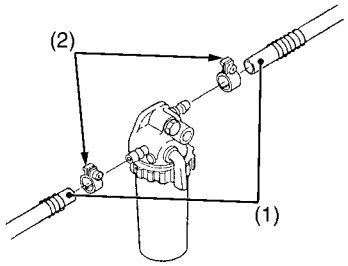

3EEACAA1P058B

[A]

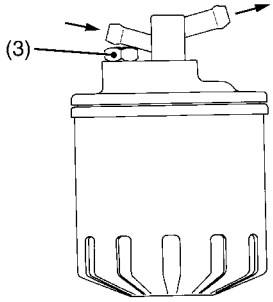

3EEACAA1P059A

[B]

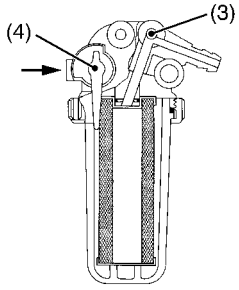

3EEACAA1P060A

Replacing Fuel Hoses and Clamp Bands

1. Loosen the clamp (2) and remove the fuel hose (1).
2. Replace new fuel hose (1) and new clamp (2).
3. Tighten the clamp (2).

CAUTION

- **Stop the engine when attempting the check and change prescribed above.**

(When bleeding fuel system)

1. Fill the tank with fuel and open the fuel valve (4).
2. Loosen the air vent plug (3) of the fuel filter a few turns.
3. Screw back the plug when bubbles do not come up any more.
4. Open the air vent valve on top of the fuel injection pump.
5. If equipped electrical fuel feed pump, turn the key to AC position and pump the fuel up for 10 to 15 seconds.
   If equipped mechanical fuel feed pump, set the stop lever on stop position and crank the engine for 10 to 15 seconds.
6. Close securely the air vent valve after air bleeding.

NOTE

- **Always keep the air vent valve on the fuel injection pump closed except when air is vented, or it may cause the engine to stop.**

(1) Fuel Hose
(2) Clamp
(3) Air Vent Plug
(4) Fuel Valve

[A] Cartridge Type
[B] Element Type

9Y1210784GEG0037US0

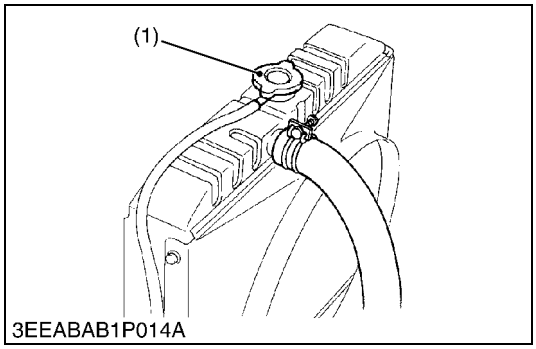

3EEABAB1P014A

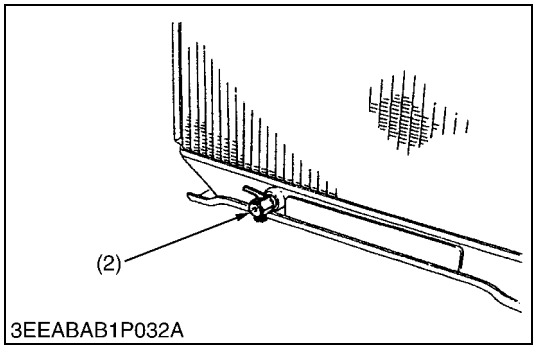

3EEABAB1P032A

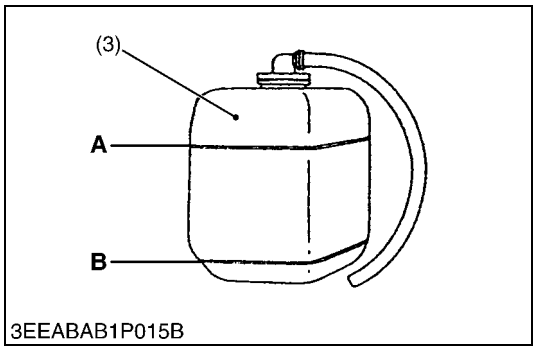

3EEABAB1P015B

Changing Radiator Coolant (L.L.C.)

CAUTION

- **Do not remove the radiator cap when the engine is hot. Then loosen cap slightly to the stop to relieve any excess pressure before removing cap completely.**

1. Stop the engine and let cool down.
2. To drain the coolant, open the radiator drain valve (2) and remove the radiator cap (1). Then radiator cap (1) must be removed to completely drain the coolant. And open the drain valve of engine body.
3. After all coolant is drained, close the drain valve (2).
4. Fill with clean water and cooling system cleaner.
5. Follow directions of the cleaner instruction.
6. After flushing, fill with clean water and anti-freeze until the coolant level is just below the port. Install the radiator cap (1) securely.
7. Fill with coolant up to **FULL "A"** mark on the recovery tank (3).
8. Start and operate the engine for few minutes.
9. Stop the engine and let cool. Check coolant level of radiator and recovery tank (3) and add coolant if necessary.

IMPORTANT

- **Do not start engine without coolant.**
- **Use clean, fresh, soft water and anti-freeze to fill the radiator and recovery tank.**
- **When the anti-freeze is mixed with fresh, soft water, the antifreeze mixing ratio must be less than 50 %.**
- **Securely tighten radiator cap. If the cap is loose or improperly fitted, water may leak out and the engine could overheat.**

(1) Radiator Cap
(2) Drain Valve
(3) Recovery Tank

A: Full
B: Low

(To be continued)

(Continued)

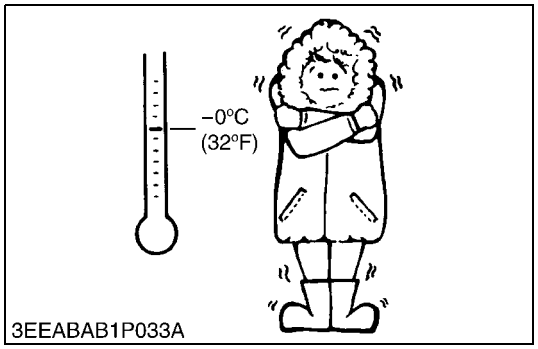

3EEABAB1P033A

■ **Anti-freeze**

- There are 2 types of anti-freeze available: use the permanent type (PT) for this engine.
- When you add anti-freeze for the first time, flush the water jacket and radiator interior with clean, soft water several times.
- The brand of the anti-freeze and the ambient temperature have an effect on the procedure to mix water and anti-freeze. Refer to the SAE J1034 standard, especially to the SAE J814c.
- Mix the anti-freeze with clean, soft water, and then fill into the radiator.

■ **IMPORTANT**

- **Make sure that when you mix the anti-freeze and water, the ratio of anti-freeze is less than 50 %.**

Vol % Anti-freeze	Freezing Point		Boiling Point*	
	°C	°F	°C	°F
40	−24	−11	106	223
50	−37	−35	108	226

* At 1.01 × 100000 Pa (760 mmHg) pressure (atmospheric). Use a radiator pressure cap that lets the pressure collect in the cooling system to get a higher boiling point.

■ **NOTE**

- **The above data is the industrial standards that shows the minimum glycol content necessary in the concentrated anti-freeze.**
- **When the coolant level decreases because of evaporation, add clean, soft water only to keep the anti-freeze mixing ratio less than 50 %. If there is a leakage, add anti-freeze and clean, soft water in the specified mixing ratio.**
- **The anti-freeze absorbs moisture. Keep new anti-freeze in a tightly sealed container.**
- **Do not use the radiator cleaning agents after you add anti-freeze to the coolant. Anti-freeze contains an anti-corrosive agent, which reacts with the radiator cleaning agent to make sludge and cause damages to the engine parts.**

9Y1210784GEG0038US0

5. SPECIAL TOOLS

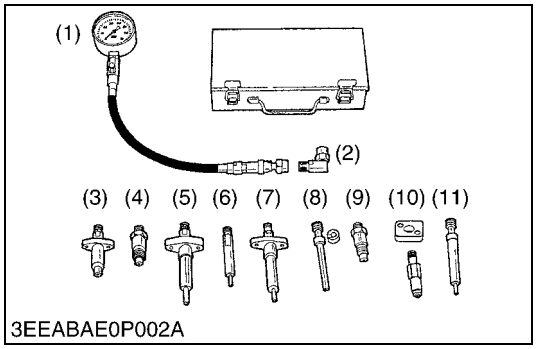

Diesel Engine Compression Tester (for Nozzle Hole)

Code No.
- 07909-30208 (Assembly)
- 07909-30934 (**A** to **F**)
- 07909-31211 (**E** and **F**)
- 07909-31231 (**H**)
- 07909-31251 (**G**)
- 07909-31271 (**I**)
- 07909-31281 (**J**)

Application
- Use to measure diesel engine compression and diagnosis of need for major overhaul.

Adaptor
- **H** for 05 series.

(1) Gauge
(2) **L** Joint
(3) Adaptor **A**
(4) Adaptor **B**
(5) Adaptor **C**
(6) Adaptor **E**
(7) Adaptor **F**
(8) Adaptor **G**
(9) Adaptor **H**
(10) Adaptor **I**
(11) Adaptor **J**

9Y1210784GEG0039US0

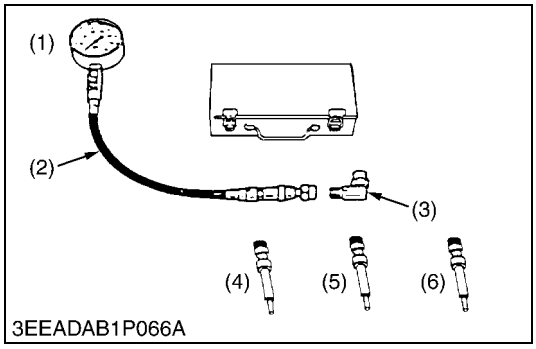

Diesel Engine Compression Tester (for Glow Plug Hole)

Code No.
- 07909-39081 (Assembly)
- 07909-31291 (**K**)
- 07909-31301 (**L**)
- 07909-31311 (**M**)

Application
- Use to measure diesel engine compression and diagnosis of need for major overhaul.

Adaptor
- **L** for 05 series.

(1) Gauge
(2) Hose Assembly
(3) **L** Joint
(4) Adaptor **K**
(5) Adaptor **L**
(6) Adaptor **M**

9Y1210784GEG0040US0

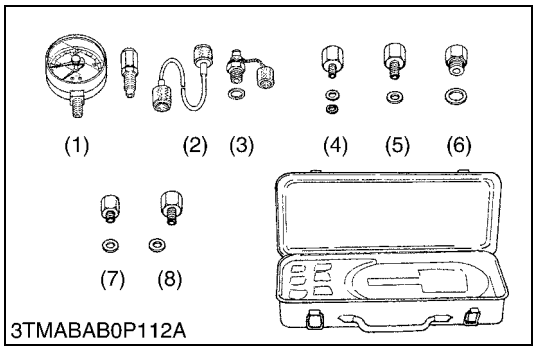

Oil Pressure Tester

Code No.
- 07916-32032

Application
- Use to measure lubricating oil pressure.

(1) Gauge
(2) Cable
(3) Threaded Joint
(4) Adaptor 1
(5) Adaptor 2
(6) Adaptor 3
(7) Adaptor 4
(8) Adaptor 5

9Y1210784GEG0041US0

■ **NOTE**

- **The following special tools are not provided, so make them referring to the figure.**

9Y1210784GEG0049US0

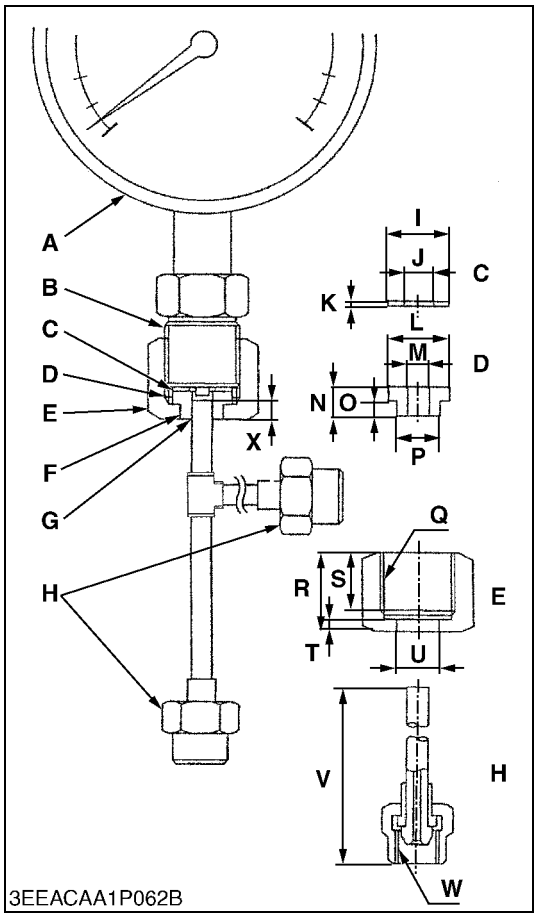

3EEACAA1P062B

Injection Pump Pressure Tester

Application

- Use to check fuel tightness of injection pumps.

A	Pressure gauge full scale: More than 29.4 MPa (300 kgf/cm^2, 4267 psi)
B	PF 1/2
C	Copper gasket
D	Flange (Material: Steel)
E	Hex. nut 27 mm (1.1 in.) across the plat
F	Adhesive application
G	Fillet welding on the enter circumference
H	Retaining nut
I	17 mm dia. (0.67 in. dia.)
J	8.0 mm dia. (0.31 in. dia.)
K	1.0 mm (0.039 in.)
L	17 mm dia. (0.67 in. dia.)
M	6.10 to 6.20 mm dia. (0.241 to 0.244 in. dia.)
N	8.0 mm (0.31 in.)
O	4.0 mm (0.16 in.)
P	11.97 to 11.99 mm dia. (0.4713 to 0.4720 in. dia.)
Q	PF 1/2
R	23 mm (0.91 in.)
S	17 mm (0.67 in.)
T	4.0 mm (0.16 in.)
U	12.00 to 12.02 mm dia. (0.472 to 0.4732 in. dia.)
V	100 mm (3.94 in.)
W	M12 × P1.5
X	5.0 mm (0.20 in.)

9Y1210784GEG0042US0

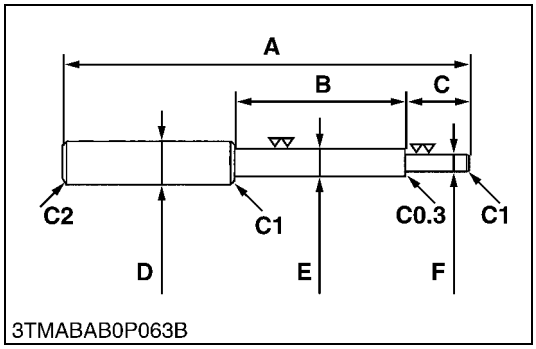

3TMABAB0P063B

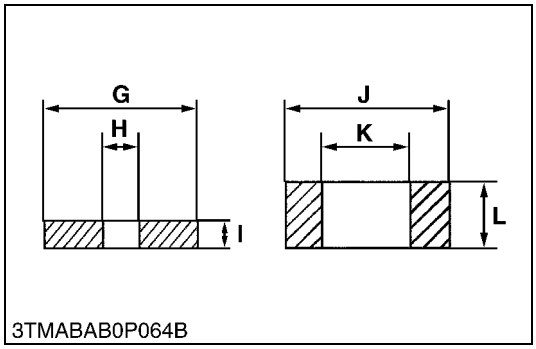

3TMABAB0P064B

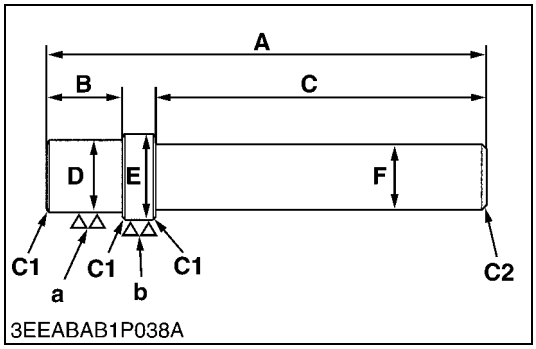

3EEABAB1P038A

Valve Guide Replacing Tool

Application

- Use to press out and press fit the valve guide.

A	225 mm (8.86 in.)
B	70 mm (2.8 in.)
C	45 mm (1.8 in.)
D	20 mm dia. (0.79 in. dia.)
E	11.7 to 11.9 mm dia. (0.461 to 0.468 in. dia.)
F	6.50 to 6.60 mm dia. (0.256 to 0.259 in. dia.)
G	25 mm dia. (0.98 in. dia.)
H	6.70 to 7.00 mm dia. (0.264 to 0.275 in. dia.)
I	5.0 mm (0.20 in.)
J	20 mm dia. (0.79 in. dia.)
K	12.5 to 12.8 mm dia. (0.493 to 0.503 in. dia.)
L	8.90 to 9.10 mm (0.351 to 0.358 in.)
C1	Chamfer 1.0 mm (0.039 in.)
C2	Chamfer 2.0 mm (0.079 in.)
C0.3	Chamfer 0.30 mm (0.012 in.)

9Y1210784GEG0043US0

Bushing Replacing Tool

Application

- Use to press out and press fit the bushing.

1. For small end bushing

A	157 mm (6.18 in.)
B	24 mm (0.94 in.)
C	120 mm (4.72 in.)
D	21.8 to 21.9 mm dia. (0.859 to 0.862 in. dia.)
E	24.8 to 24.9 mm dia. (0.977 to 0.980 in. dia.)
F	20 mm dia. (0.79 in. dia.)
a	6.3 µm (250 µin.)
b	6.3 µm (250 µin.)
C1	Chamfer 1.0 mm (0.039 in.)
C2	Chamfer 2.0 mm (0.079 in.)

2. For idle gear bushing

A	196 mm (7.72 in.)
B	26 mm (1.0 in.)
C	150 mm (5.91 in.)
D	25.80 to 25.90 mm dia. (1.016 to 1.019 in. dia.)
E	28.80 to 28.90 mm dia. (1.134 to 1.137 in. dia.)
F	20 mm dia. (0.79 in. dia.)
a	6.3 µm (250 µin.)
b	6.3 µm (250 µin.)
C1	Chamfer 1.0 mm (0.039 in.)
C2	Chamfer 2.0 mm (0.079 in.)

9Y1210784GEG0044US0

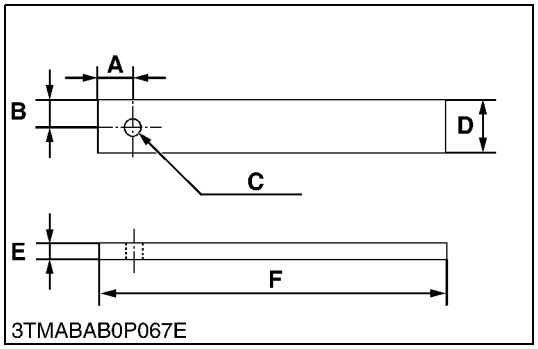

Flywheel Stopper

Application

- Use to loosen and tighten the flywheel screw.

A	20 mm (0.79 in.)
B	15 mm (0.59 in.)
C	10 mm dia. (0.39 in. dia.)
D	30 mm (1.2 in.)
E	8.0 mm (0.31 in.)
F	200 mm (7.87 in.)

9Y1210784GEG0045US0

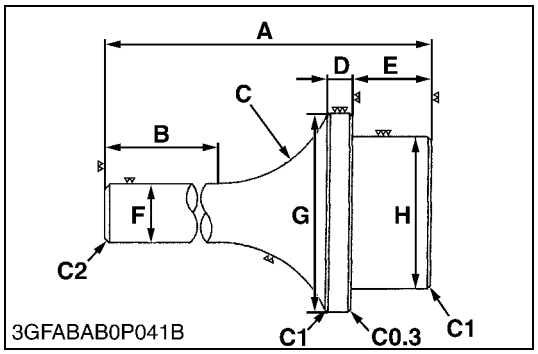

Crankshaft Bearing 1 Replacing Tool

Application

- Use to press out and press fit the crankshaft bearing 1.

[Press Out]

A	135 mm (5.31 in.)
B	72 mm (2.8 in.)
C	40 mm radius (1.6 in. radius)
D	10 mm (0.39 in.)
E	24 mm (0.94 in.)
F	20 mm dia. (0.79 in. dia.)
G	51.20 to 51.40 mm dia. (2.016 to 2.023 in. dia.)
H	47.30 to 47.50 mm dia. (1.863 to 1.870 in. dia.)
C1	Chamfer 1.0 mm (0.039 in.)
C2	Chamfer 2.0 mm (0.079 in.)
C0.3	Chamfer 0.30 mm (0.012 in.)

[Press Fit]

A	135 mm (5.31 in.)
B	72 mm (2.8 in.)
C	40 mm radius (1.6 in. radius)
D	10 mm (0.39 in.)
E	24 mm (0.94 in.)
F	20 mm dia. (0.79 in. dia.)
G	68 mm dia. (2.7 in. dia.)
H	47.30 to 47.50 mm dia. (1.863 to 1.870 in. dia.)
C1	Chamfer 1.0 mm (0.039 in.)
C2	Chamfer 2.0 mm (0.079 in.)
C0.3	Chamfer 0.30 mm (0.012 in.)

9Y1210784GEG0046US0

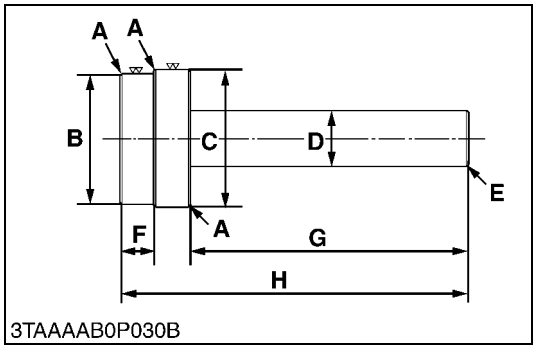

3TAAAAB0P030B

Governor Gear Holder Bushing Replacing Tool

Application

- Use to press out and to press fit the governor gear holder bushing.

A	C1: Chamfer 1.0 mm (0.039 in.)
B	73.90 to 74.00 mm dia. (2.910 to 2.913 in. dia.)
C	69.80 to 69.90 mm dia. (2.748 to 2.751 in. dia.)
D	30 mm dia. (1.2 in. dia.)
E	C2: Chamfer 2.0 mm (0.079 in.)
F	18 mm (0.71 in.)
G	150 mm (5.91 in.)
H	188 mm (7.40 in.)

9Y1210784GEG0047US0

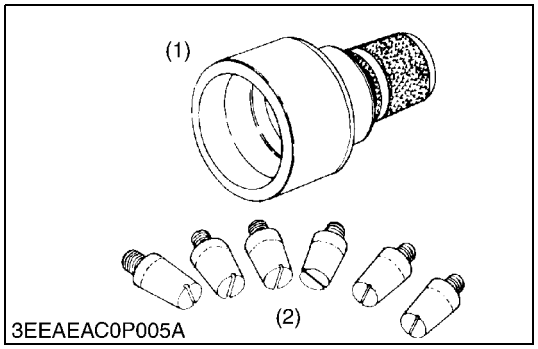

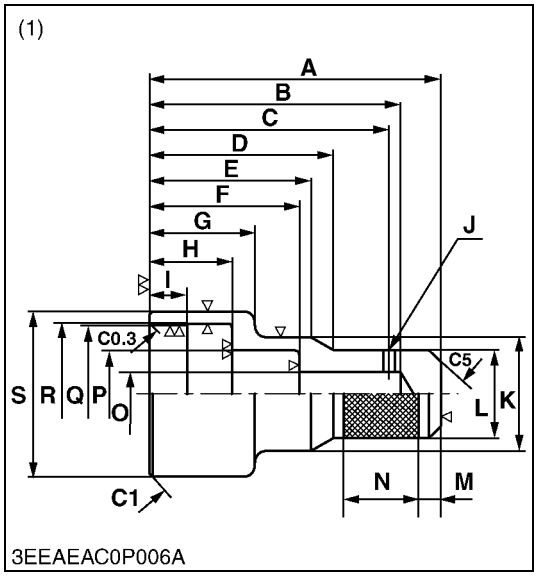

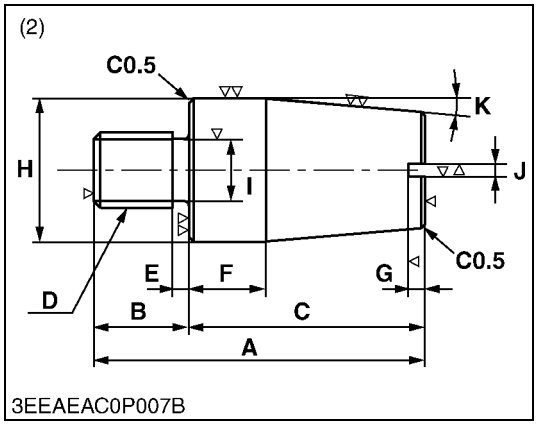

Crank Sleeve Setter

Application

- Use to fix the crankshaft sleeve.

(1) Auxiliary Socket for Pushing

A	130 mm (5.12 in.)
B	112 mm (4.41 in.)
C	107 mm (4.21 in.)
D	82 mm (3.2 in.)
E	72 mm (2.8 in.)
F	67 mm (2.6 in.)
G	47 mm (1.8 in.)
H	36.00 to 36.20 mm (1.418 to 1.425 in.)
I	17 mm (0.67 in.)
J	5.0 mm dia. (0.20 in. dia.)
K	52 mm dia. (2.0 in. dia.)
L	40 mm dia. (1.6 in. dia.)
M	10 mm (0.39 in.)
N	33 mm (1.3 in.)
O	20 mm dia. (0.79 in. dia.)
P	40 mm dia. (1.6 in. dia.)
Q	72.10 to 72.15 mm dia. (2.839 to 2.840 in. dia.)
R	73 mm dia. (2.9 in. dia.)
S	83 mm dia. (3.3 in. dia.)
C0.3	Chamfer 0.30 mm (0.012 in.)
C1	Chamfer 1.0 mm (0.039 in.)
C5	Chamfer 5.0 mm (0.20 in.)

(2) Sleeve Guide

A	42 mm (1.7 in.)
B	12 mm (0.47 in.)
C	30 mm (1.2 in.)
D	M10 × Pitch 1.25
E	2.0 mm (0.079 in.)
F	10 mm (0.39 in.)
G	2.0 mm (0.079 in.)
H	17.90 to 17.95 mm dia. (0.7048 to 0.7066 in. dia.)
I	8.0 mm dia. (0.31 in. dia.)
J	1.8 mm (0.071 in.)
K	0.09 rad (5 °)
C0.5	Chamfer 0.5 mm (0.02 in.)

9Y1210784GEG0048US0

1 ENGINE

MECHANISM

CONTENTS

1. ENGINE BODY 1-M1
   [1] CLOSED BREATHER 1-M1
   [2] HALF-FLOATING HEAD COVER (D1305-E4B/E4BG) 1-M1
   [3] GOVERNOR 1-M2
   [4] BOOST COMPENSATOR 1-M4

1. ENGINE BODY

[1] CLOSED BREATHER



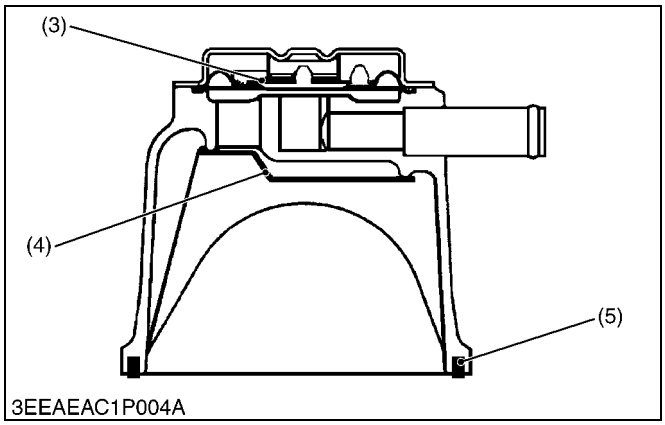

Closed breather system has been adopted to prevent the release of blow-by gas into the atmosphere.

After its oil content is filtered by oil shield (4), the blow by gas in fed back to the intake manifold through breather valve (3) to be used for re-combustion.

(1) Breather Tube
(2) Cylinder Head Cover
(3) Breather Valve
(4) Oil Shield
(5) Rubber Packing

9Y1210784ENM0001US0

[2] HALF-FLOATING HEAD COVER (D1305-E4B/E4BG)

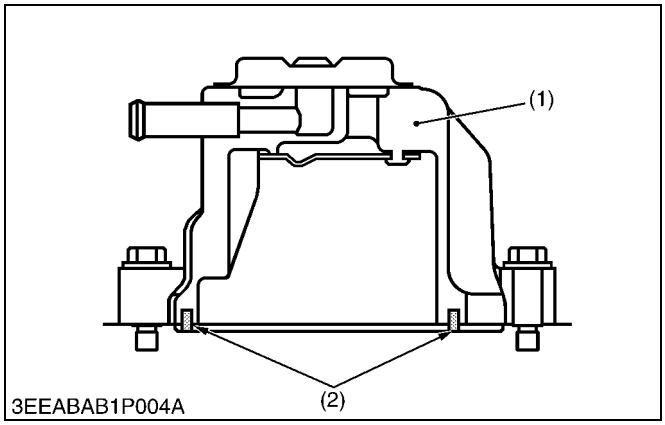

The rubber packing is fitted in to maintain the cylinder head cover 0.5 mm (0.02 in.) or so off the cylinder head. This arrangement helps reduce noise coming from the cylinder head.

(1) Cylinder Head Cover
(2) Rubber Packing

9Y1210784ENM0002US0

[3] GOVERNOR

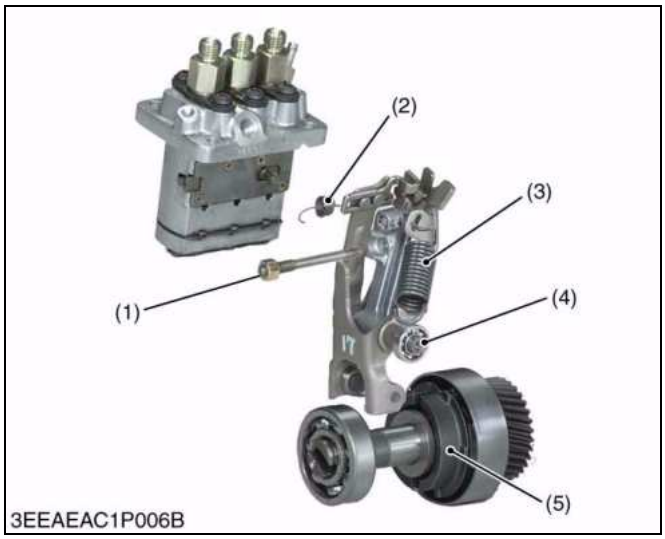

3EEAEAC1P006B

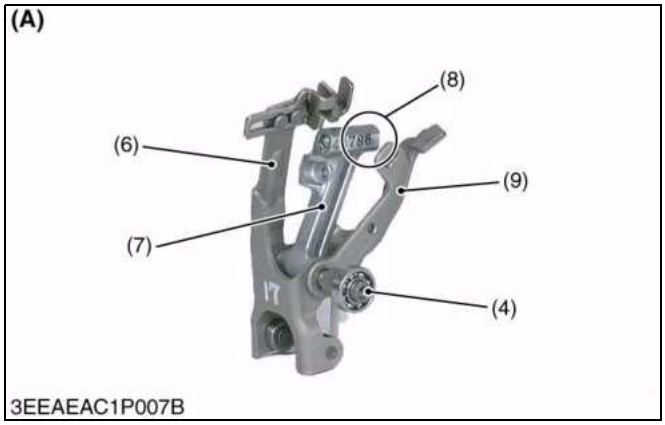

3EEAEAC1P007B

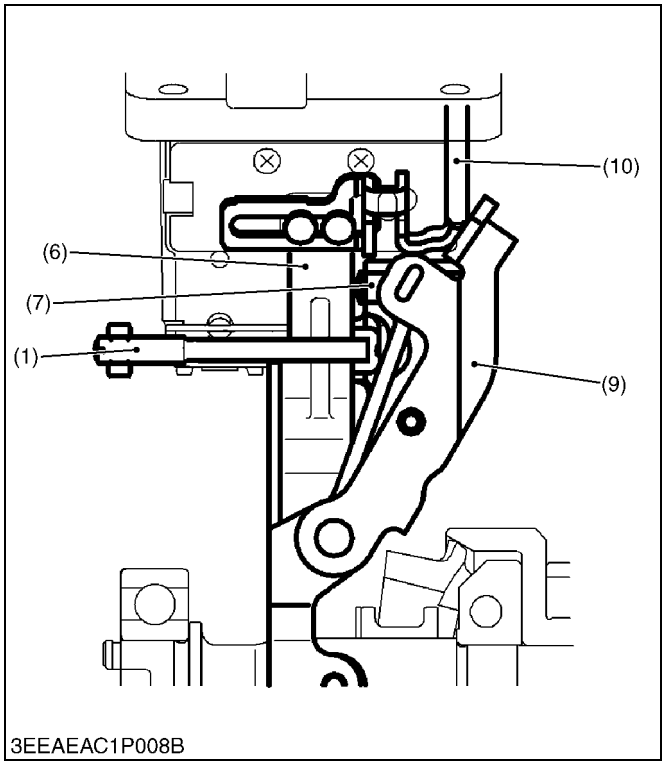

3EEAEAC1P008B

Three Lever Type Fork Lever (for standard type)

The governor system is a mechanical governor that used the flyweight (5).

The flyweight (5) is mounted on the governor shaft that rotates at the same speed as the crankshaft.

Because the feature of this mechanism takes out the engine speed directly as a centrifugal force of weight, the speed control that the change in the engine rotational speed is sensitively transmitted to fork lever assembly **(A)** and accuracy is high is enabled.

The fork lever assembly of this engine is composed of fork lever 1 (6), for lever 2 (9), and the floating lever (7). A slide plate is installed in fork lever 1. The governor spring (3) is hooked to fork lever 2 (9).

The floating lever (7) installs the torque pin (8) of the output drop prevention at the overload. The start spring (2) is hooked to a slide plate, and holds the control rack in the direction of the full fuel position.

Fork lever 2 (9) and the floating lever are installed in fork lever 1 (6) with the fork lever shaft (4). The max torque limitation (1) device limits the amount of the fuel injection at the overload with the torque pin.

(1) Max Torque Limiter
(2) Start Spring
(3) Governor Spring
(4) Fork Lever Shaft
(5) Flyweight
(6) Fork Lever 1
(7) Floating Lever
(8) Torque Pin
(9) Fork Lever 2

(A) Fork Lever Assembly

9Y1210784ENM0003US0

(At Rated Operation)

When the engine is running, the fork lever 2 (9) and the floating lever (7) are moving with the fork lever 1 (6) due to the tension of the governor spring (3).

During the time, the torque pin (8) is pressed into the floating lever by centrifugal force of the governor weight (5).

The fork lever 2 (9) comes in contact with the fuel limitation bolt (10), and the fuel injection pump supplies a fuel necessary for rated operation.

(1) Max Torque Limiter
(6) Fork Lever 1
(7) Floating Lever
(9) Fork Lever 2
(10) Fuel Limitation Bolt

9Y1210784ENM0004US0

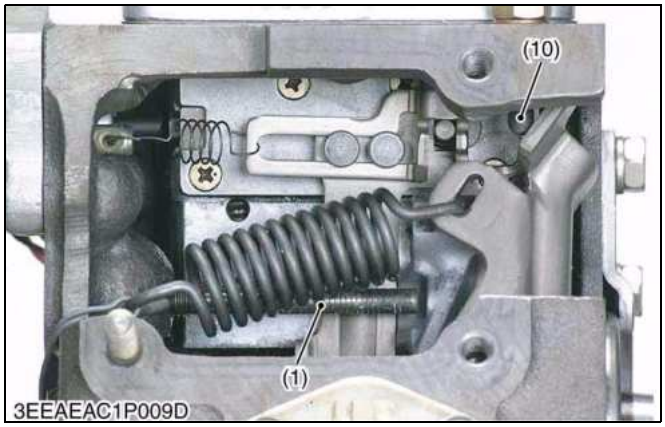

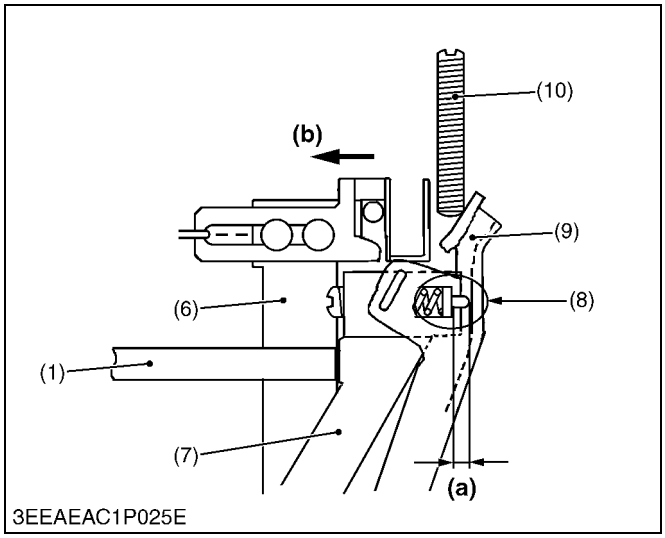

(Overloaded Operation)

The amount of the movement of the fork lever assembly is limited with the fuel limitation bolt (10) and can not be moved in the direction of the fuel increase.

As overload reduces the centrifugal force of the governor weight, which is pressing the torque pin (8) into the floating lever (7), the floating lever pushes the fork lever 1 (6) in the way to increase the fuel supply with the help of the torque spring tension.

The fuel supply increases **(b)** in relation to the degree of the torque pin motion, thus preventing the engine speed from dropping.

At the time, the maximum torque limiter (1) prevents superfluous fuel supply and suppresses the generation of black smoke.

(1) Max Torque Limiter
(6) Fork Lever 1
(7) Floating Lever
(8) Torque Pin
(9) Fork Lever 2
(10) Fuel Limitation Bolt

(a) Distance to which torque pin (8) pushes fork lever 1 (6) out
(b) Increase of fuel

9Y1210784ENM0005US0

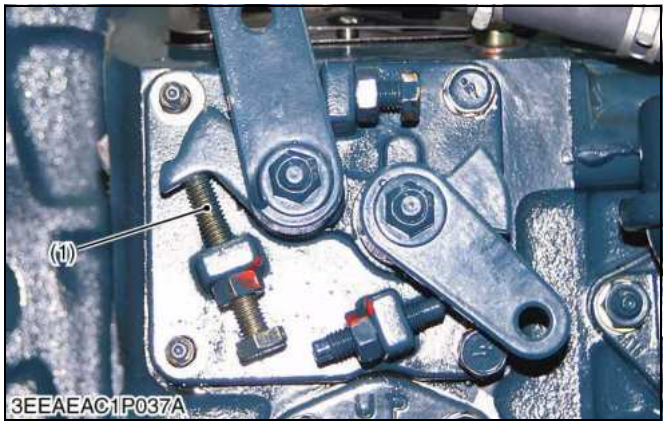

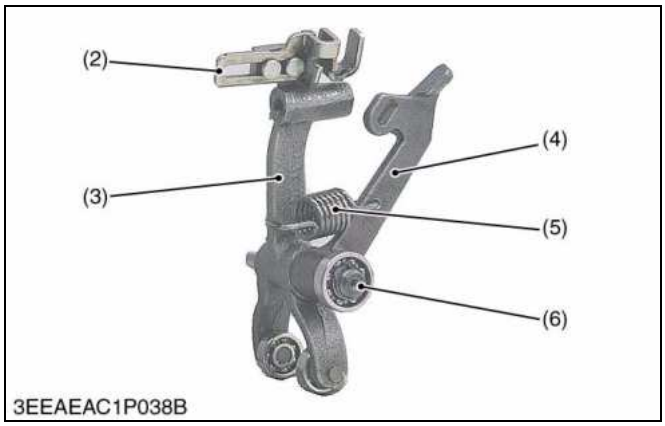

Two Lever Type Fork Lever (for BG type)

The engine speed of BG engine 1800 min^{-1} (rpm) specification.

The fork lever assembly of BG series is composed of fork lever 1 (3), fork lever 2 (4).

A slide plate is installed in fork lever 1. The governor spring (5) is hooked to fork lever 2 (4).

The start spring is hooked to a slide plate, and holds the control rack in the direction of full fuel position.

Fork lever 2 (4) and fork lever 1 (3) are installed with the fork lever shaft (4).

(1) Idle Speed Adjust Bolt
(2) Slide Plate
(3) Fork Lever 1
(4) Fork Lever 2
(5) Governor Spring
(6) Fork Lever Shaft

9Y1210784ENM0006US0

[4] BOOST COMPENSATOR

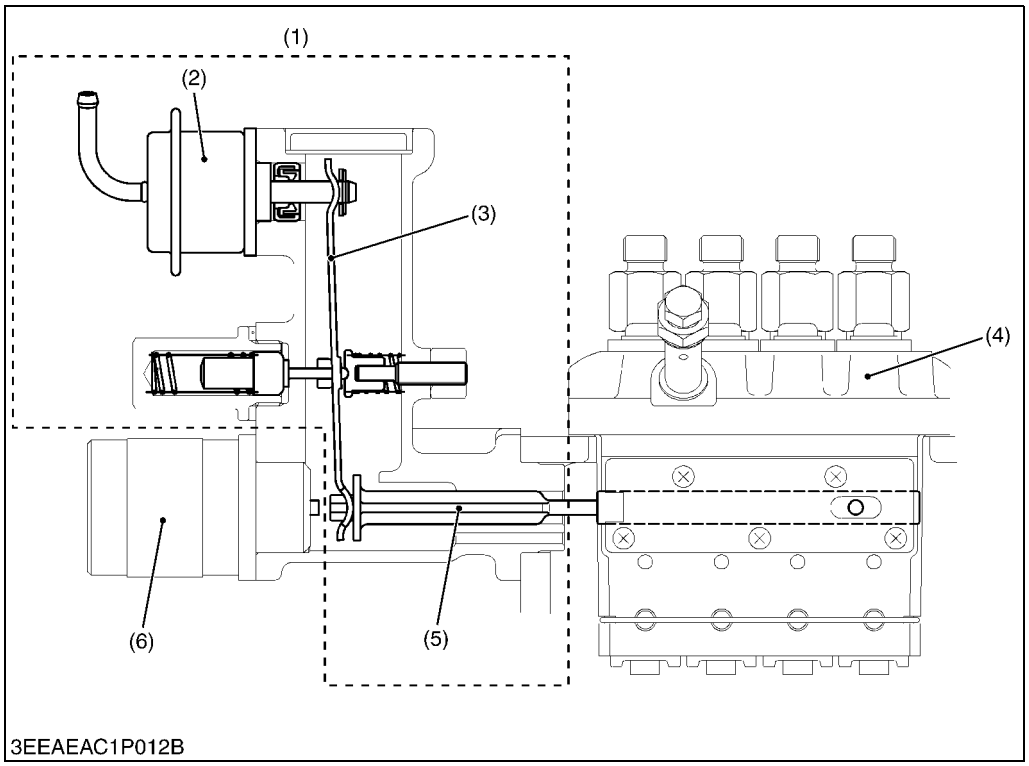

3EEAEAC1P012B

(1) Boost Compensator Assembly
(2) Actuator
(3) Plate
(4) Injection Pump Assembly
(5) Guide
(6) Stop Solenoid

A: Fulcrum

9Y1210784ENM0007US0

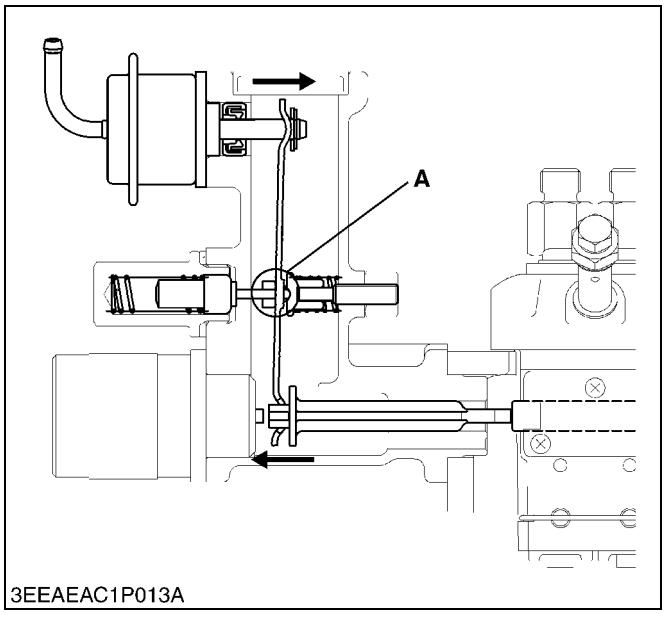

3EEAEAC1P013A

Boost compensator is the device that reduces black smoke during the engine startup and acceleration.

The rod of actuator (2) is pushed out by the rise of boost pressure, and the plate (3) moves in the direction of the fuel increase around the fulcrum **"A"**.

9Y1210784ENM0008US0

SERVICING

CONTENTS

1. TROUBLESHOOTING....1-S1
2. SERVICING SPECIFICATIONS....1-S5
3. TIGHTENING TORQUES....1-S12
   [1] TIGHTENING TORQUES FOR GENERAL USE SCREWS, BOLTS AND NUTS....1-S12
   [2] TIGHTENING TORQUES FOR SPECIAL USE SCREWS, BOLTS AND NUTS....1-S13
4. CHECKING, DISASSEMBLING AND SERVICING....1-S14
   [1] CHECKING AND ADJUSTING....1-S14
      (1) Engine Body....1-S14
      (2) Lubricating System....1-S16
      (3) Cooling System....1-S16
      (4) Fuel System....1-S19
      (5) Electrical System....1-S23
   [2] DISASSEMBLING AND ASSEMBLING....1-S27
      (1) Draining Oil and Coolant....1-S27
      (2) External Components....1-S27
      (3) Cylinder Head and Valve....1-S28
      (4) Gear Case and Timing Gears....1-S32
      (5) Piston and Connecting Rod....1-S38
      (6) Flywheel and Crankshaft....1-S41
      (7) Alternator....1-S44
      (8) Starter....1-S45
   [3] SERVICING....1-S47
      (1) Cylinder Head and Valves....1-S47
      (2) Timing Gears, Camshaft and Governor Gear....1-S53
      (3) Piston and Connecting Rod....1-S56
      (4) Crankshaft....1-S58
      (5) Cylinder....1-S64
      (6) Oil Pump....1-S65
      (7) Starter....1-S65
      (8) Alternator....1-S68

1. TROUBLESHOOTING

Symptom	Probable Cause	Solution	Reference Page
Engine Does Not Start	No fuel	Replenish fuel	G-11
	Air in the fuel system	Vent air	G-11
	Water in the fuel system	Change fuel and repair or replace fuel system	–
	Fuel pipe clogged	Clean or replace	G-11
	Fuel filter clogged	Replace	G-16
	Excessively high viscosity of fuel or engine oil at low temperature	Use specified fuel or engine oil	I-5, I-6, G-9
	Fuel with low cetane number	Use specified fuel	–
	Fuel leak due to loose injection pipe retaining nut	Tighten retaining nut	–
	Incorrect injection timing	Adjust	1-S19
	Fuel camshaft worn	Replace	1-S37
	Injection nozzle clogged	Clean or replace	1-S21, 1-S23
	Injection pump malfunctioning	Repair or replace	1-S20, 1-S36
	Seizure of crankshaft, camshaft, piston, cylinder or bearing	Repair or replace	1-S37, 1-S38, 1-S39, 1-S40, 1-S58, 1-S59, 1-S60, 1-S61, 1-S62, 1-S63, 1-S64
	Compression leak from cylinder	Replace head gasket, tighten cylinder head screw, glow plug and nozzle holder	1-S29, 1-S30, 1-S31
	Improper valve timing	Correct or replace timing gear	1-S37
	Piston ring and cylinder worn	Replace	1-S38, 1-S39, 1-S40
	Excessive valve clearance	Adjust	1-S15
	Stop solenoid malfunctioning	Replace	1-S35
Starter Does Not Run	Battery discharged	Charge	–
	Starter malfunctioning	Repair or replace	1-S27, 1-S65, 1-S66, 1-S67
	Key switch malfunctioning	Replace	–
	Wiring disconnected	Connect	–

KiSC issued 04, 2014 A

Symptom	Probable Cause	Solution	Reference Page
Engine Revolution Is Not Smooth	Fuel filter clogged or dirty	Replace	G-16
	Air cleaner clogged	Clean or replace	G-12, G-15, G-20
	Fuel leak due to loose injection pipe retaining nut	Tighten retaining nut	–
	Injection pump malfunctioning	Repair or replace	1-S20, 1-S36
	Incorrect nozzle opening pressure	Adjust	1-S22
	Injection nozzle stuck or clogged	Repair or replace	1-S21, 1-S23
	Governor malfunctioning	Repair	1-S36, 1-S37
Either White or Blue Exhaust Gas Is Observed	Excessive engine oil	Reduce to specified level	–
	Piston ring and cylinder worn or stuck	Repair or replace	1-S39, 1-S40, 1-S64
	Incorrect injection timing	Adjust	1-S19
Either Black or Dark Gray Exhaust Gas Is Observed	Overload	Lessen the load	–
	Low grade fuel used	Use specified fuel	I-5, I-6
	Fuel filter clogged	Replace	G-16
	Air cleaner clogged	Clean or replace	G-12, G-15, G-20
	Deficient nozzle injection	Repair or replace nozzle	1-S21, 1-S23
Deficient Output	Incorrect injection timing	Adjust	1-S19
	Engine's moving parts seem to be seizing	Repair or replace	–
	Injection pump malfunctioning	Repair or replace	1-S20, 1-S36
	Deficient nozzle injection	Repair or replace nozzle	1-S21, 1-S23
	Compression leak	Check the compression pressure and repair	1-S14
	Air cleaner dirty or clogged	Clean or replace	G-12, G-15, G-20

Symptom	Probable Cause	Solution	Reference Page
Excessive Lubricant Oil Consumption	Piston ring's gap facing the same direction	Shift ring gap direction	1-S39
	Oil ring worn or stuck	Replace	1-S39, 1-S40
	Piston ring groove worn	Replace piston	1-S38, 1-S39, 1-S40
	Valve stem and valve guide worn	Replace	1-S32, 1-S49
	Crankshaft bearing and crank pin bearing worn	Replace	1-S43
	Oil leaking due to damaged seals or packing	Replace	–
Fuel Mixed into Lubricant Oil	Injection pump's plunger worn	Repair or replace	1-S20, 1-S36
	Deficient nozzle injection	Repair or replace nozzle	1-S21, 1-S23
	Injection pump broken	Replace	1-S36
Water Mixed into Lubricant Oil	Head gasket damaged	Replace	1-S30, 1-S31
	Cylinder block or cylinder head flawed	Replace	1-S30, 1-S31
Low Oil Pressure	Engine oil insufficient	Replenish	G-9
	Oil strainer clogged	Clean	1-S38
	Relief valve stuck with dirt	Clean	–
	Relief valve spring weaken or broken	Replace	–
	Excessive oil clearance of crankshaft bearing	Replace	1-S41
	Excessive oil clearance of crankpin bearing	Replace	1-S41
	Excessive oil clearance of rocker arm	Replace	1-S30
	Oil passage clogged	Clean	–
	Different type of oil	Use specified type of oil	G-9
	Oil pump damaged	Replace	–
High Oil Pressure	Different type of oil	Use specified type of oil	G-9
	Relief valve damaged	Replace	–

KiSC issued 04, 2014 A

Symptom	Probable Cause	Solution	Reference Page
Engine Overheated	Engine oil insufficient	Replenish	G-9
	Fan belt broken or elongated	Replace or adjust	G-12, G-13
	Coolant insufficient	Replenish	G-17
	Radiator net and radiator fin clogged with dust	Clean	–
	Inside of radiator corroded	Clean or replace	G-17
	Coolant flow route corroded	Clean or replace	G-17, G-26
	Radiator cap damaged	Replace	–
	Overload running	Reduce the load	–
	Head gasket damaged	Replace	1-S30, 1-S31
	Incorrect injection timing	Adjust	1-S19
	Unsuitable fuel used	Use specified fuel	I-5, I-6
Battery Quickly Discharged	Battery electrolyte insufficient	Replenish distilled water and charge	G-13
	Fan belt slips	Adjust belt tension or replace	G-12, G-13
	Wiring disconnected	Connect	–
	Rectifier damaged	Replace	–
	Alternator damaged	Replace	–
	Battery damaged	Replace	–

9Y1210784ENS0001US0

2. SERVICING SPECIFICATIONS

ENGINE BODY

Item		Factory Specification	Allowable Limit
Valve Clearance (Cold)		0.145 to 0.185 mm 0.00571 to 0.00728 in.	–
Compression Pressure	D1005-E4B/E4BG D1105-E4B/E4BG D1305-E4B/E4BG V1505-E4B/E4BG	3.73 to 4.11 MPa 38.0 to 42.0 kgf/cm^2 541 to 597 psi	2.26 MPa 23.0 kgf/cm^2 327 psi
• Difference among Cylinders		−	10 % or less
Top Clearance	D1005-E4B/E4BG D1105-E4B/E4BG V1505-E4B/E4BG	0.55 to 0.75 mm 0.022 to 0.029 in.	–
	D1305-E4B/E4BG	0.80 to 1.0 mm 0.032 to 0.039 in.	–
Cylinder Head Surface	Flatness	–	0.05 mm 0.002 in.
Valve Recessing	Intake and Exhaust	−0.050 to 0.25 mm −0.0020 to 0.0098 in.	0.40 mm 0.016 in.
Valve Stem to Valve Guide	Clearance	0.035 to 0.065 mm 0.0014 to 0.0025 in.	0.10 mm 0.0039 in.
• Valve Stem	O.D.	6.960 to 6.975 mm 0.2741 to 0.2746 in.	–
• Valve Guide	I.D.	7.010 to 7.025 mm 0.2760 to 0.2765 in.	–
Valve Face	Angle (Intake)	1.0 rad 60 °	–
	Angle (Exhaust)	0.79 rad 45 °	–
Valve Seat	Angle (Intake)	1.0 rad 60 °	–
	Angle (Exhaust)	0.79 rad 45 °	–
	Width	2.12 mm 0.0835 in.	–
Valve Spring	Free Length	37.0 to 37.5 mm 1.46 to 1.47 in.	36.5 mm 1.44 in.
	Tilt	–	1.0 mm 0.039 in.
	Setting Load	117.4 N / 31.0 mm 11.97 kgf / 31.0 mm 26.39 lbf / 1.22 in.	100.0 N / 31.0 mm 10.20 kgf / 31.0 mm 22.48 lbf / 1.22 in.

KiSC issued 04, 2014 A

Item		Factory Specification	Allowable Limit
Rocker Arm Shaft to Rocker Arm	Clearance	0.016 to 0.045 mm 0.00063 to 0.0017 in.	0.10 mm 0.0039 in.
• Rocker Arm Shaft	O.D.	11.973 to 11.984 mm 0.47138 to 0.47181 in.	–
• Rocker Arm	I.D.	12.000 to 12.018 mm 0.47244 to 0.47314 in.	–
Push Rod	Alignment	–	0.25 mm 0.0098 in.
Tappet to Tappet Guide	Clearance	0.020 to 0.062 mm 0.00079 to 0.0024 in.	0.07 mm 0.003 in.
• Tappet	O.D.	19.959 to 19.980 mm 0.78579 to 0.78661 in.	–
• Tappet Guide	I.D.	20.000 to 20.021 mm 0.78740 to 0.78822 in.	–
Timing Gear			
• Crank Gear to Idle Gear 1	Backlash	0.0320 to 0.115 mm 0.00126 to 0.00452 in.	0.15 mm 0.0059 in.
• Idle Gear 1 to Cam Gear	Backlash	0.0360 to 0.114 mm 0.00142 to 0.00448 in.	0.15 mm 0.0059 in.
• Idle Gear 1 to Injection Pump Gear	Backlash	0.0340 to 0.116 mm 0.00134 to 0.00456 in.	0.15 mm 0.0059 in.
• Idle Gear 1 to Idle Gear 2	Backlash	0.0330 to 0.117 mm 0.00130 to 0.00460 in.	0.15 mm 0.0059 in.
• Idle Gear 2 to Governor Gear	Backlash	0.0300 to 0.117 mm 0.00119 to 0.00460 in.	0.15 mm 0.0059 in.
Governor Gear			
• Governor Gear to Injection Pump Gear	Backlash	0.0300 to 0.117 mm 0.00119 to 0.00460 in.	0.15 mm 0.0059 in.
Idle Gear Shaft to Gear Bushing			
• Idle Gear 1	Clearance	0.020 to 0.054 mm 0.00079 to 0.0021 in.	0.10 mm 0.0039 in.
• Idle Gear Bushing	I.D.	26.000 to 26.021 mm 1.0237 to 1.0244 in.	–
• Idle Gear Shaft 1	O.D.	25.967 to 25.980 mm 1.0224 to 1.0228 in.	–
• Idle Gear 2	Clearance	0.020 to 0.054 mm 0.00079 to 0.0021 in.	0.10 mm 0.0039 in.
• Idle Gear Bushing	I.D.	26.000 to 26.021 mm 1.0237 to 1.0244 in.	–
• Idle Gear Shaft 2	O.D.	25.967 to 25.980 mm 1.0223 to 1.0228 in.	–

Item		Factory Specification	Allowable Limit
Idle Gear • Idle Gear 1	Side Clearance	0.20 to 0.51 mm 0.0079 to 0.020 in.	0.80 mm 0.031 in.
• Idle Gear 2	Side Clearance	0.20 to 0.51 mm 0.0079 to 0.020 in.	0.80 mm 0.031 in.
Camshaft	Side Clearance	0.070 to 0.22 mm 0.0028 to 0.0086 in.	0.30 mm 0.012 in.
	Alignment	–	0.01 mm 0.0004 in.
Cam Height	Intake	28.80 mm 1.134 in.	28.75 mm 1.132 in.
	Exhaust	29.00 mm 1.142 in.	28.95 mm 1.140 in.
Camshaft Journal to Cylinder Block Bore	Oil Clearance	0.050 to 0.091 mm 0.0020 to 0.0035 in.	0.15 mm 0.0059 in.
• Camshaft Journal	O.D.	35.934 to 35.950 mm 1.4148 to 1.4153 in.	–
• Cylinder Block Bore	I.D.	36.000 to 36.025 mm 1.4174 to 1.4183 in.	–
Piston Pin Bore	I.D.	22.000 to 22.013 mm 0.86615 to 0.86665 in.	22.03 mm 0.8673 in.
Piston Pin to Small End Bushing	Clearance	0.014 to 0.038 mm 0.00056 to 0.0014 in.	0.15 mm 0.0059 in.
• Piston Pin	O.D.	22.002 to 22.011 mm 0.86622 to 0.86657 in.	–
• Small End Bushing	I.D.	22.025 to 22.040 mm 0.86713 to 0.86771 in.	–
Piston Ring Gap **[D1005-E4B/E4BG]**	Top Ring	0.30 to 0.45 mm 0.012 to 0.017 in.	1.25 mm 0.0492 in.
	Second Ring	0.30 to 0.45 mm 0.012 to 0.017 in.	1.25 mm 0.0492 in.
	Oil Ring	0.25 to 0.45 mm 0.0099 to 0.017 in.	1.25 mm 0.0492 in.
Piston Ring Gap **[D1105-E4B/E4BG]** **[D1305-E4B/E4BG]** **[V1505-E4B/E4BG]**	Top Ring	0.15 to 0.25 mm 0.0059 to 0.0098 in.	1.20 mm 0.0472 in.
	Second Ring	0.40 to 0.55 mm 0.016 to 0.021 in.	1.20 mm 0.0472 in.
	Oil Ring	0.25 to 0.45 mm 0.0099 to 0.017 in.	1.25 mm 0.0492 in.
Piston Ring to Piston Ring Groove			
• Second Ring	Clearance	0.0850 to 0.122 mm 0.00335 to 0.00480 in.	0.2 mm 0.008 in.
• Oil Ring	Clearance	0.02 to 0.06 mm 0.0008 to 0.002 in.	0.15 mm 0.0059 in.

Item		Factory Specification	Allowable Limit
Connecting Rod	Alignment	–	0.05 mm 0.002 in.
Crankshaft	Alignment	–	0.02 mm 0.0008 in.
Crankshaft to Crankshaft Bearing 1 **[D1005-E4B/E4BG]** **[D1105-E4B/E4BG]** **[V1505-E4B/E4BG]**	Oil Clearance	0.0340 to 0.114 mm 0.00134 to 0.00448 in.	0.20 mm 0.0079 in.
• Crankshaft	O.D.	47.934 to 47.950 mm 1.8872 to 1.8877 in.	–
• Crankshaft Bearing 1	I.D.	47.984 to 48.048 mm 1.8892 to 1.8916 in.	–
Crankshaft to Crankshaft Bearing 1 **[D1305-E4B/E4BG]**	Oil Clearance	0.0340 to 0.119 mm 0.00134 to 0.00468 in.	0.20 mm 0.0079 in.
• Crankshaft	O.D.	51.921 to 51.940 mm 2.0442 to 2.0448 in.	–
• Crankshaft Bearing 1	I.D.	51.974 to 52.040 mm 2.0463 to 2.0488 in.	–
Crankshaft to Crankshaft Bearing 2 **[D1005-E4B/E4BG]** **[D1105-E4B/E4BG]** **[V1505-E4B/E4BG]**	Oil Clearance	0.034 to 0.095 mm 0.0014 to 0.0037 in.	0.20 mm 0.0079 in.
• Crankshaft Journal	O.D.	47.934 to 47.950 mm 1.8872 to 1.8877 in.	–
• Crankshaft Bearing 2	I.D.	47.984 to 48.029 mm 1.8892 to 1.8908 in.	–
Crankshaft to Crankshaft Bearing 2 **[D1305-E4B/E4BG]**	Oil Clearance	0.0340 to 0.103 mm 0.00134 to 0.00405 in.	0.20 mm 0.0079 in.
• Crankshaft Journal	O.D.	51.921 to 51.940 mm 2.0442 to 2.0448 in.	–
• Crankshaft Bearing 2	I.D.	51.974 to 52.024 mm 2.0463 to 2.0481 in.	–
Crankshaft to Crankshaft Bearing 3	Oil Clearance	0.0340 to 0.103 mm 0.00134 to 0.00405 in.	0.20 mm 0.0079 in.
• Crankshaft Journal	O.D.	51.921 to 51.940 mm 2.0442 to 2.0448 in.	–
• Crankshaft Bearing 3	I.D.	51.974 to 52.024 mm 2.0463 to 2.0481 in.	–
Crankpin to Crankpin Bearing	Oil Clearance	0.029 to 0.091 mm 0.0012 to 0.0035 in.	0.20 mm 0.0079 in.
• Crankpin	O.D.	39.959 to 39.975 mm 1.5732 to 1.5738 in.	–
• Crankpin Bearing	I.D.	40.040 to 40.050 mm 1.5764 to 1.5767 in.	–

Item		Factory Specification	Allowable Limit
Crankshaft	Side Clearance	0.15 to 0.31 mm 0.0059 to 0.012 in.	0.50 mm 0.020 in.
Cylinder Liner I.D.	D1005-E4B/E4BG	76.000 to 76.019 mm 2.9922 to 2.9928 in.	76.15 mm 2.998 in.
	D1105-E4B/E4BG D1305-E4B/E4BG V1505-E4B/E4BG	78.000 to 78.019 mm 3.0709 to 3.0716 in.	78.15 mm 3.077 in.
Cylinder (Oversized)	D1005-E4B/E4BG	76.500 to 76.519 mm 3.0119 to 3.0125 in.	76.65 mm 3.018 in.
	D1105-E4B/E4BG D1305-E4B/E4BG V1505-E4B/E4BG	78.500 to 78.519 mm 3.0906 to 3.0912 in.	78.65 mm 3.096 in.

LUBRICATING SYSTEM

Item		Factory Specification	Allowable Limit
Engine Oil Pressure **[D1005-E4B]** **[D1105-E4B]** **[D1305-E4B]** **[V1505-E4B]**	At Idle Speed	68 kPa 0.69 kgf/cm^2 9.9 psi	–
	At Rated Speed	294 to 441 kPa 3.00 to 4.49 kgf/cm^2 42.7 to 63.9 psi	147 kPa 1.50 kgf/cm^2 21.3 psi
Engine Oil Pressure **[D1005-E4BG]** **[D1105-E4BG]** **[D1305-E4BG]** **[V1505-E4BG]**	At Idle Speed	–	–
	At Rated Speed	245 to 392 kPa 2.50 to 3.99 kgf/cm^2 35.6 to 56.8 psi	147 kPa 1.50 kgf/cm^2 21.3 psi
Inner Rotor to Outer Rotor	Clearance	0.060 to 0.18 mm 0.0024 to 0.0071 in.	–
Outer Rotor to Pump Body	Clearance	0.100 to 0.180 mm 0.00394 to 0.00708 in.	–
Inner Rotor to Cover	Clearance	0.025 to 0.075 mm 0.00099 to 0.0029 in.	–

COOLING SYSTEM

Item		Factory Specification	Allowable Limit
Fan Belt	Tension	7.0 to 9.0 mm / 98 N 0.28 to 0.35 in. / 98 N (10 kgf, 22 lbf)	–
Thermostat	Valve Opening Temperature (At Beginning)	69.5 to 72.5 °C 157.1 to 162.5 °F	–
	Valve Opening Temperature (Opened Completely)	85 °C 185 °F	–
Radiator Cap	Pressure Falling Time	10 seconds or more 88 → 59 kPa 0.89 → 0.61 kgf/cm^2 12 → 8.6 psi	–
Radiator	Water Leakage Test Pressure	No leak at specified pressure	–

FUEL SYSTEM

Item		Factory Specification	Allowable Limit
Injection Pump **[D1005-E4B]**	Injection Timing (3000 min^{-1} (rpm))	0.3011 to 0.3272 rad (17.25 to 18.75 °) before T.D.C.	–
	Injection Timing (3200 min^{-1} (rpm))	0.3360 to 0.3621 rad (19.25 to 20.75 °) before T.D.C.	–
[D1105-E4B]	Injection Timing (3000 min^{-1} (rpm))	0.3011 to 0.3272 rad (17.25 to 18.75 °) before T.D.C.	–
[D1305-E4B]	Injection Timing (2600 min^{-1} (rpm))	0.2662 to 0.2923 rad (15.25 to 16.75 °) before T.D.C.	–
[V1505-E4B]	Injection Timing (2300 min^{-1} (rpm))	0.2313 to 0.2574 rad (13.25 to 14.75 °) before T.D.C.	–
[D1005-E4BG, D1105-E4BG]	Injection Timing (1800 min^{-1} (rpm))	0.2575 to 0.2836 rad (14.75 to 16.25 °) before T.D.C.	–
[D1305-E4BG, V1505-E4BG]	Injection Timing (1800 min^{-1} (rpm))	0.2487 to 0.2748 rad (14.25 to 15.75 °) before T.D.C.	–
Pump Element	Fuel Tightness	–	13.73 MPa 140.0 kgf/cm^2 1991 psi
Delivery Valve	Fuel Tightness	10 seconds 13.73 → 12.75 MPa 140.0 → 130.1 kgf/cm^2 1991 → 1850 psi	5 seconds 13.73 → 12.75 MPa 140.0 → 130.1 kgf/cm^2 1991 → 1850 psi
Injection Nozzle	Injection Pressure	13.73 to 14.70 MPa 140.0 to 150.0 kgf/cm^2 1992 to 2133 psi	–
Injection Nozzle Valve Seat	Valve Seat Tightness	When the pressure is 12.75 MPa (130.0 kgf/cm^2, 1849 psi), the valve seat must be fuel tightness.	–

ELECTRICAL SYSTEM

Item		Factory Specification	Allowable Limit
Glow Plug	Resistance	Approx. 0.9 Ω	–
Starter (Gear Reduction Type) • Commutator	O.D.	30.0 mm 1.18 in.	29.0 mm 1.14 in.
• Difference	O.D.	Less than 0.02 mm 0.0008 in.	0.05 mm 0.002 in.
• Mica	Undercut	0.50 to 0.80 mm 0.020 to 0.031 in.	0.20 mm 0.0079 in.
• Brush	Length	16.0 mm 0.630 in.	10.5 mm 0.413 in.
Starter (Electromagnetic Drive Type) • Commutator	O.D.	28.0 mm 1.10 in.	27.0 mm 1.06 in.
• Difference	O.D.	Less than 0.05 mm 0.002 in.	0.4 mm 0.02 in.
• Mica	Undercut	0.50 to 0.80 mm 0.020 to 0.031 in.	0.20 mm 0.0079 in.
• Brush	Length	16.0 mm 0.630 in.	10.5 mm 0.413 in.
Alternator • Stator	Resistance	Less than 1.0 Ω	–
• Rotor	Resistance	2.9 Ω	–
• Slip Ring	O.D.	14.4 mm 0.567 in.	14.0 mm 0.551 in.
• Brush	Length	10.0 mm 0.394 in.	8.4 mm 0.33 in.
Stop Solenoid • Holding Coil	Resistance	Approx. 16 Ω	–
• Pulling Coil	Resistance	Approx. 0.38 Ω	–

9Y1210784ENS0002US0

3. TIGHTENING TORQUES

Use a torque wrench to tighten the screws, bolts and nuts to the specified torque. Tighten the screws, bolts and nuts used, such as on the cylinder head in the correct sequence and torque.

9Y1210784ENS0003US0

[1] TIGHTENING TORQUES FOR GENERAL USE SCREWS, BOLTS AND NUTS

If the tightening torque is not specified, refer to the table below for the none specified torques values.

Indication on top of bolt	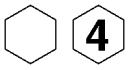 **No-grade or 4T**			 **7T**		
Indication on top of nut	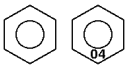 **No-grade or 4T**					
Unit	**N·m**	**kgf·m**	**lbf·ft**	**N·m**	**kgf·m**	**lbf·ft**
M6	7.9 to 9.3	0.80 to 0.95	5.8 to 6.8	9.81 to 11.2	1.00 to 1.15	7.24 to 8.31
M8	18 to 20	1.8 to 2.1	13 to 15	24 to 27	2.4 to 2.8	18 to 20
M10	40 to 45	4.0 to 4.6	29 to 33	49 to 55	5.0 to 5.7	37 to 41
M12	63 to 72	6.4 to 7.4	47 to 53	78 to 90	7.9 to 9.2	58 to 66

9Y1210784ENS0004US0

[2] TIGHTENING TORQUES FOR SPECIAL USE SCREWS, BOLTS AND NUTS

■ **NOTE**

- **For the screws, bolts and nuts with the mark "*", apply engine oil to their threads and seats before you tighten.**
- **The alphabet "M" in Dimension × Pitch shows that the screw, bolt or nut dimensions are in the metric system. The dimension is the nominal external diameter in mm of the threads. The pitch is the nominal distance in mm between 2 threads.**

Item	Dimension × Pitch	N·m	kgf·m	lbf·ft
Cylinder head cover screw **[D1005-E4B/E4BG, D1105-E4B/E4BG, V1505-E4B/E4BG]**	M7 × 1.0	7 to 8	0.7 to 0.9	5 to 6
Cylinder head cover screw **[D1305-E4B/E4BG]**	M6 × 1.0	9.81 to 11.2	1.00 to 1.15	7.24 to 8.31
Cylinder head screw	M10 × 1.25	64 to 68	6.5 to 7.0	47 to 50
*Main bearing case screw 1	M8 × 1.25	30 to 34	3.0 to 3.5	22 to 25
*Main bearing case screw 2	M9 × 1.25	49 to 53	5.0 to 5.5	37 to 39
*Flywheel screw	M10 × 1.25	54 to 58	5.5 to 6.0	40 to 43
*Connecting rod screw	M8 × 1.0	42 to 46	4.2 to 4.7	31 to 33
*Rocker arm bracket nut **[D1005-E4B/E4BG, D1105-E4B/E4BG, V1505-E4B/E4BG]**	M7 × 1.0	22 to 26	2.2 to 2.7	16 to 19
*Rocker arm bracket screw **[D1305-E4B/E4BG]**	M7 × 1.0	22 to 26	2.2 to 2.7	16 to 19
*Idle gear shaft screw	M6 × 1.0	9.81 to 11.2	1.00 to 1.15	7.24 to 8.31
*Fan drive pulley screw	M14 × 1.5	236 to 245	24.0 to 25.0	174 to 180
Bearing case cover mounting screw	M6 × 1.0	10.8 to 12.2	1.10 to 1.25	7.96 to 9.04
Glow plug	M8 × 1.0	7.9 to 14	0.80 to 1.5	5.8 to 10
Nozzle holder assembly	M20 × 1.5	49 to 68	5.0 to 7.0	37 to 50
Nozzle holder	–	35 to 39	3.5 to 4.0	26 to 28
Oil pressure switch	PT 1/8	15 to 19	1.5 to 2.0	11 to 14
Injection pipe retaining nut	M12 × 1.5	25 to 34	2.5 to 3.5	18 to 25
Overflow pipe retaining nut (Serial No.: below BTZ999)	M12 × 1.5	20 to 24	2.0 to 2.5	15 to 18
Overflow pipe retaining nut (Serial No.: above BU0001)	M12 × 1.5	35 to 39	3.5 to 4.0	26 to 28
Starter's **B** terminal nut	M8	5.88 to 11.8	0.600 to 1.20	4.34 to 8.70
Alternator's pulley nut	–	58.4 to 78.9	5.95 to 8.05	43.1 to 58.2
Drain plug with copper gasket	M12 × 1.25	33 to 37	3.3 to 3.8	24 to 27
Drain plug with rubber coated gasket	M22 × 1.5	45 to 53	4.5 to 5.5	33 to 39

9Y1210784ENS0005US0

4. CHECKING, DISASSEMBLING AND SERVICING

[1] CHECKING AND ADJUSTING

(1) Engine Body

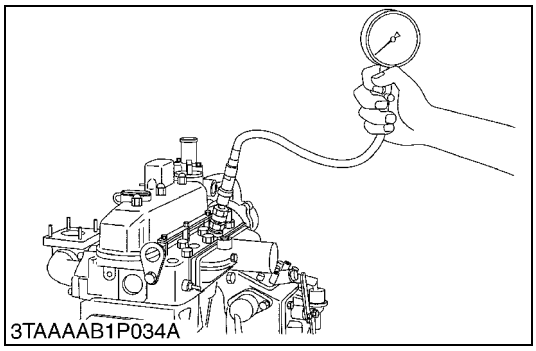

Compression Pressure

1. Run the engine until it is warmed up.
2. Stop the engine.
3. Remove the air cleaner, the muffler and all glow plugs (or nozzles).
4. Set a compression tester with the adaptor to the glow plug hole (or nozzle hole).
   Nozzle hole: Adaptor **H** (07909-31231)
   Glow plug hole: Adaptor **L** (07909-31301)
5. After making sure that the stop lever is set at the stop position (non-injection), run the engine with the starter and measure the compression pressure.
6. Repeat steps 4 and 5 for each cylinder.
7. If the measurement is below the allowable limit, apply a small amount of oil to the cylinder wall through the glow plug hole (or nozzle hole) and measure the compression pressure again.
8. If the compression pressure is still less than the allowable limit, check the top clearance, valve clearance and cylinder head.
9. If the compression pressure increases after applying oil, check the cylinder wall and piston rings.

■ **NOTE**

- **Check the compression pressure with the specified valve clearance.**
- **Always use a fully charged battery for performing this test.**
- **Variances in cylinder compression values should be under 10 %.**

Compression pressure	D1005-E4B/E4BG D1105-E4B/E4BG D1305-E4B/E4BG V1505-E4B/E4BG	Factory specification	3.73 to 4.11 MPa 38.0 to 42.0 kgf/cm^2 541 to 597 psi
		Allowable limit	2.26 MPa 23.0 kgf/cm^2 327 psi

9Y1210784ENS0006US0

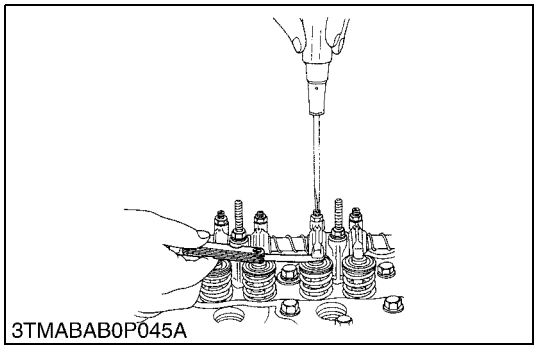
3TMABAB0P045A

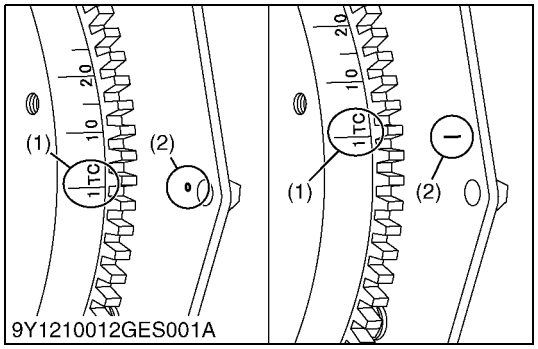

9Y1210012GES001A

Valve Clearance

■ **IMPORTANT**

- **Valve clearance must be checked and adjusted when engine is cold.**

1. Remove the cylinder head cover and the glow plugs.
2. Align the **"1TC"** mark (1) on the flywheel and alignment mark (2) on the rear end plate so that the No. 1 piston comes to the compression top dead center.
3. Check the following valve clearance marked with "☆" using a feeler gauge.
4. If the clearance is not within the factory specifications, adjust with the adjusting screw.
5. Then turn the flywheel 6.28 rad (360 °), and align the **"1TC"** mark (1) on the flywheel and alignment mark (2) on the rear end plate so that the No. 1 piston comes to the overlap position.
6. Check the following valve clearance marked with "☆" using a feeler gauge.

Adjustable Cylinder Location of Piston		3 cylinder		4 cylinder	
		IN.	EX.	IN.	EX.
When No. 1 piston is at compression top dead center	1	☆	☆	☆	☆
	2		☆	☆	
	3	☆			☆
	4				
When No. 1 piston is at overlap position	1				
	2	☆			☆
	3		☆	☆	
	4			☆	☆

Valve clearance	Factory specification	0.145 to 0.185 mm 0.00571 to 0.00728 in.

■ **NOTE**

- **The sequence of cylinder numbers is given as No. 1, No. 2, No. 3 and No. 4 starting from the gear case side.**
- **After adjusting the valve clearance, secure the adjusting screw with the lock nut.**

(1) **"1TC"** Mark (2) Alignment Mark

9Y1210784ENS0007US0

(2) Lubricating System

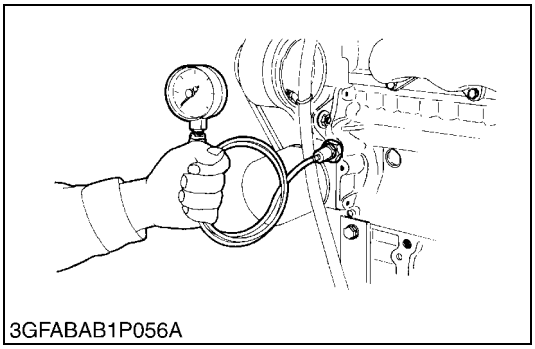
3GFABAB1P056A

Engine Oil Pressure

1. Remove the engine oil pressure switch, and set an oil pressure tester.
2. Start the engine. After warming up, measure the oil pressure of both idling and rated speeds.
3. If the oil pressure is less than the allowable limit, check the following.
   - Engine oil insufficient
   - Oil pump damaged
   - Oil strainer clogged
   - Oil filter cartridge clogged
   - Oil gallery clogged
   - Excessive oil clearance
   - Foreign matter in the relief valve

Engine oil pressure	At idle speed	Allowable limit	49 kPa 0.50 kgf/cm^2 7.1 psi
	At rated speed	Factory specification	197 to 441 kPa 2.00 to 4.50 kgf/cm^2 28.5 to 64.0 psi
		Allowable limit	147 kPa 1.50 kgf/cm^2 21.3 psi

(When reassembling)

- After checking the engine oil pressure, tighten the engine oil pressure switch to the specified torque.

Tightening torque	Oil pressure switch	15 to 19 N·m 1.5 to 2.0 kgf·m 11 to 14 lbf·ft

9Y1210784ENS0008US0

(3) Cooling System

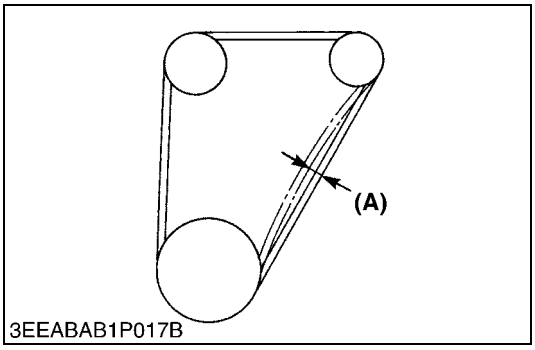

3EEABAB1P017B

Fan Belt Tension

1. Measure the deflection **(A)**, depressing the belt halfway between the fan drive pulley and alternator pulley at specified force 98 N (10 kgf, 22 lbf).
2. If the measurement is not within the factory specifications, loosen the alternator mounting screws and relocate the alternator to adjust.

Deflection **(A)**	Factory specification	7.0 to 9.0 mm 0.28 to 0.35 in.

(A) Deflection

9Y1210784GEG0014US0

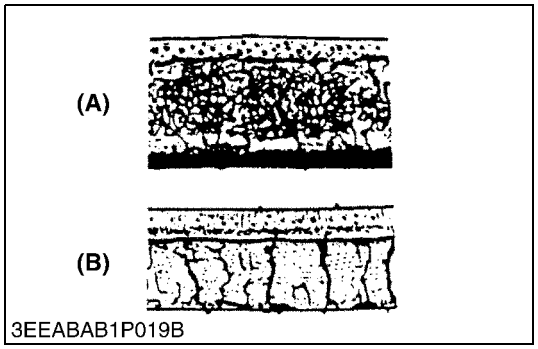

3EEABAB1P019B

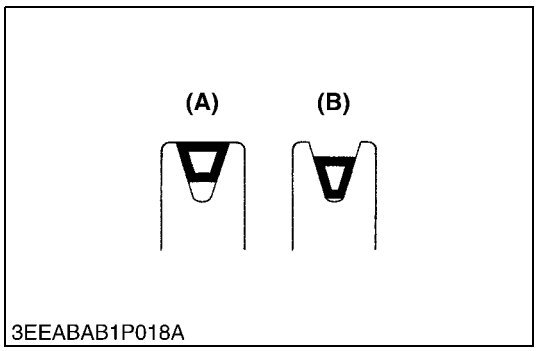

3EEABAB1P018A

Fan Belt Damage and Wear

1. Check the fan belt for damage.
2. If the fan belt is damaged, replace it.
3. Check if the fan belt is worn and sunk in the pulley groove.
4. If the fan belt is nearly worn out and deeply sunk in the pulley groove, replace it.

(A) Good **(B) Bad**

9Y1210784GEG0015US0

CAUTION

- **When removing the radiator cap, wait at least ten minutes after the engine has stopped and cooled down. Otherwise, hot water may gush out, scalding nearby people.**

9Y1210784ENS0009US0

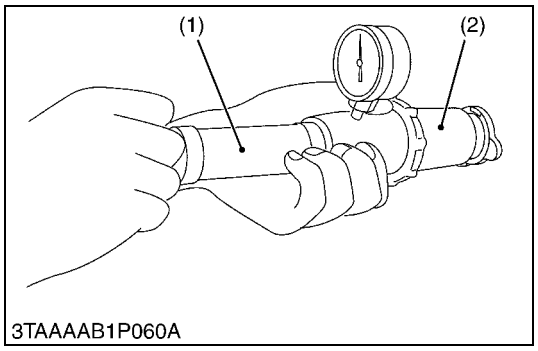

3TAAAAB1P060A

Radiator Cap Air Leakage

1. Set a radiator tester (1) and an adaptor (2) on the radiator cap.
2. Apply the specified pressure 88 kPa (0.89 kgf/cm^2, 12 psi), and measure the time for the pressure to fall to 59 kPa (0.61 kgf/cm^2, 8.6 psi).
3. If the measurement is less than the factory specification, replace the radiator cap.

Pressure falling time	Factory specification	More than 10 seconds for pressure fall 88 → 59 kPa (0.89 → 0.61 kgf/cm^2, 12 → 8.6 psi)

(1) Radiator Tester (2) Adaptor

9Y1210784ENS0010US0

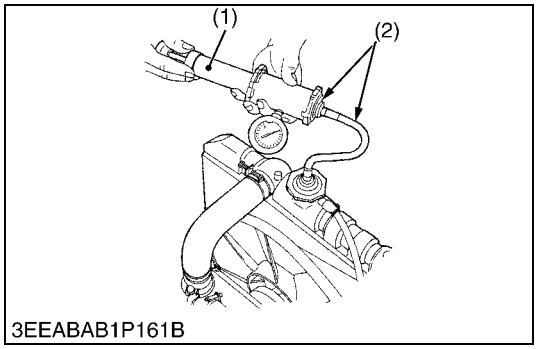

3EEABAB1P161B

Radiator Water Leakage

1. Pour a specified amount of water into the radiator.
2. Set a radiator tester (1) and an adaptor (2) and raise the water pressure to the specified pressure.
3. Check the radiator for water leaks.
4. For water leak from the pinhole, repair with the radiator cement. When water leak is excessive, replace the radiator.

Radiator water leakage test pressure	Factory specification	No leak at specified pressure

■ **NOTE**

- **The pressure of the leak test is different from each radiator specification.**
  Thus, do the leak test, refer to the test pressure of each radiator specification.

(1) Radiator Tester (2) Adaptor

9Y1210784ENS0011US0

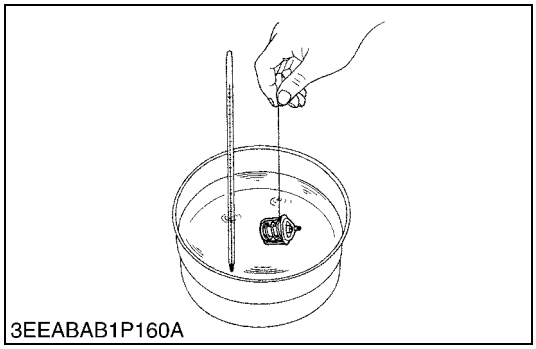
3EEABAB1P160A

Thermostat Valve Opening Temperature

1. Suspend the thermostat in the water by a string with its end inserted between the valve and seat.
2. Heating the water gradually, read the temperature when the valve opens and leaves the string.
3. Continue heating and read the temperature when the valve opens approx. 8 mm (0.3 in.).
4. If the measurement is not within the factory specifications, replace the thermostat.

Thermostat's valve opening temperature	Factory specification	69.5 to 72.5 °C 157.1 to 162.5 °F
Temperature at which thermostat completely opens	Factory specification	85 °C 185 °F

9Y1210784ENS0012US0

(4) Fuel System

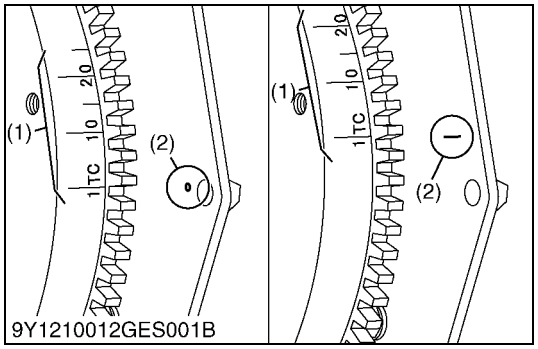

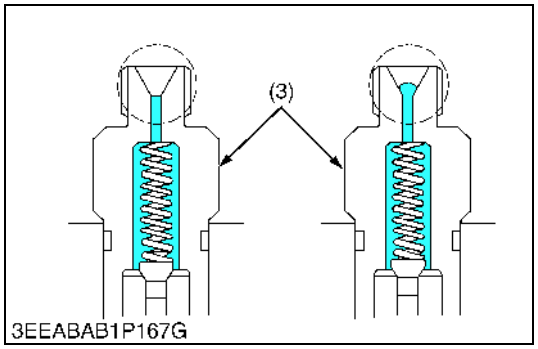

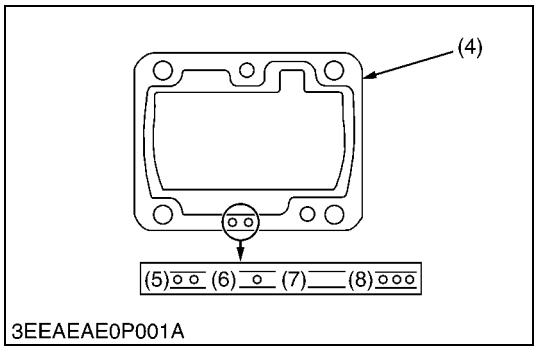

Injection Timing

1. Remove the injection pipes.
2. Remove the engine stop solenoid.
3. Turn the flywheel counterclockwise (viewed from flywheel side) until the fuel fills up to the hole of the delivery valve holder (3) for No. 1 cylinder.
4. After the fuel fills up to the hole of the delivery valve holder for No.1 cylinder, turn back (clockwise) the flywheel around 1.6 rad (90 °).
5. Turn the flywheel counterclockwise to set at around 0.44 rad (25 °) before T.D.C..
6. Slowly turn the flywheel counterclockwise and stop turning when the fuel begins to come up, to get the present injection timing.
7. Check to see the degree on flywheel.
   The flywheel gas mark **"1TC"**, **"10"** and **"20"** for the crank angle before the top dead center of No. 1 cylinder.
8. If injection timing is out of adjustment, readjust the timing with shims.

Injection timing (3000 min^{-1}(rpm))	Factory specification	D1005-E4B	0.3011 to 0.3272 rad (17.25 to 18.75 °) before T.D.C.
Injection timing (3200 min^{-1}(rpm))		D1005-E4B	0.3360 to 0.3621 rad (19.25 to 20.75 °) before T.D.C.
Injection timing (3000 min^{-1}(rpm))		D1105-E4B	0.3011 to 0.3272 rad (17.25 to 18.75 °) before T.D.C.
Injection timing (2600 min^{-1}(rpm))		D1305-E4B	0.2662 to 0.2923 rad (15.25 to 16.75 °) before T.D.C.
Injection timing (2300 min^{-1}(rpm))		V1505-E4B	0.2313 to 0.2574 rad (13.25 to 14.75 °) before T.D.C.
Injection timing (1800 min^{-1}(rpm))		D1505-E4BG, D1105-E4BG	0.2575 to 0.2836 rad (14.75 to 16.25 °) before T.D.C.
Injection timing (1800 min^{-1}(rpm))		D1305-E4BG, V1505-E4BG	0.2487 to 0.2748 rad (14.25 to 15.75 °) before T.D.C.

(1) Timing Line
(2) Alignment Mark
(3) Delivery Valve Holder
(4) Shim (Soft Metal Gasket Shim)
(5) Two-holes: 0.20 mm (0.0079 in.)
    Two-holes: 0.175 mm (0.00689 in.)
(6) One-hole: 0.25 mm (0.0098 in.)
(7) Without hole: 0.30 mm (0.012 in.)
(8) Three-holes: 0.35 mm (0.014 in.)

(To be continued)

(Continued)

■ **NOTE**
- **The liquid gasket is not required for assembling.**
- **Shims are available in thickness of 0.20 mm (0.0079 in.), 0.25 mm (0.0098 in.), 0.30 mm (0.012 in.), 0.35 mm (0.014 in.) and 0.175 mm (0.00689 in.). Combine these shims for adjustments.**
- **Addition or reduction of shim (0.025 mm, 0.00098 in.) delays or advances the injection timing by approx. 0.0044 rad (0.25 °).**
- **In disassembling and replacing the injection pump, be sure to use the same number of new shims with the same thickness.**
- **The 0.175 mm thick shim is coated only on the lower face. Therefore, do not use the 0.175 mm thick shim as the top shim of the combination (injection pump side), because this can cause oil leakage.**

9Y1210784GEG0032US0

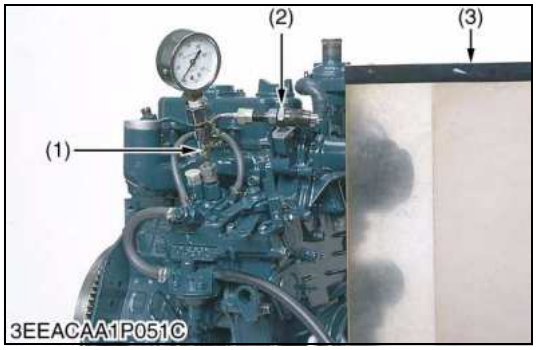

Fuel Tightness of Pump Element

1. Remove the engine stop solenoid.
2. Remove the injection pipes and glow plugs.
3. Install the injection pump pressure tester to the injection pump.
4. Install the injection nozzle (2) jetted with the proper injection pressure to the injection pump pressure tester (1). (Refer to the photo.)
5. Set the speed control lever to the maximum speed position.
6. Run the starter to increase the pressure.
7. If the pressure can not reach the allowable limit, replace the pump with new one or repair with a Kubota-authorized pump service shop.

Fuel tightness of pump element	Allowable limit	13.73 MPa 140.0 kgf/cm^2 1991 psi

■ **NOTE**
- **Never try to disassemble the injection pump assembly. For repairs, you are strongly requested to contact a Kubotaauthorized pump service shop.**

(1) Injection Pump Pressure Tester
(2) Injection Nozzle
(3) Protection Cover for Jetted Fuel

9Y1210784ENS0013US0

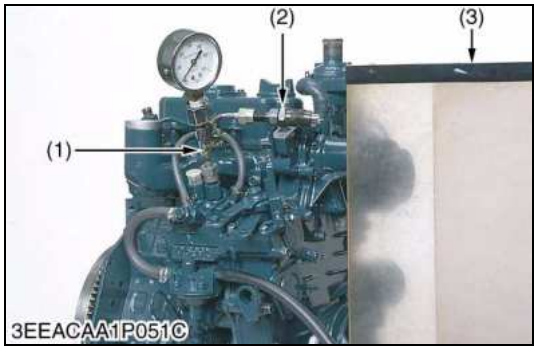

Fuel Tightness of Delivery Valve

1. Remove the engine stop solenoid.
2. Remove the injection pipes and glow plugs.
3. Set a pressure tester to the fuel injection pump.
4. Install the injection nozzle (2) jetted with the proper injection pressure to the injection pump pressure tester (1).
5. Run the starter to increase the pressure.
6. Stop the starter when the fuel jets from the injection nozzle. After that, turn the flywheel by the hand and raise the pressure to approx. 13.73 MPa (140.0 kgf/cm^2, 1991 psi).
7. Now turn the flywheel back about half a turn (to keep the plunger free). Maintain the flywheel at this position and clock the time taken for the pressure to drop from 13.73 to 12.75 MPa (from 140.0 to 130.1 kgf/cm^2, from 1991 to 1850 psi).
8. Measure the time needed to decrease the pressure from 13.73 to 12.75 MPa (140.0 to 130.1 kgf/cm^2, 1991 to 1850 psi).
9. If the measurement is less than allowable limit, replace the pump with new one or repair with a Kubota-authorized pump service shop.

Fuel tightness of delivery valve	Factory specification	10 seconds 13.73 → 12.75 MPa 140.0 → 130.1 kgf/cm^2 1991 → 1850 psi
	Allowable limit	5 seconds 13.73 → 12.75 MPa 140.0 → 130.1 kgf/cm^2 1991 → 1850 psi

■ **NOTE**

- **Never try to disassemble the injection pump assembly. For repairs, you are strongly requested to contact a Kubotaauthorized pump service shop.**

(1) Injection Pump Pressure Tester
(2) Injection Nozzle
(3) Protection Cover for Jetted Fuel

9Y1210784ENS0014US0

CAUTION

- **Check the nozzle injection pressure and condition after confirming that there is nobody standing in the direction the fume goes. If the fume from the nozzle directly contacts the human body, cells may be destroyed and blood poisoning may be caused.**

9Y1210784ENS0015US0

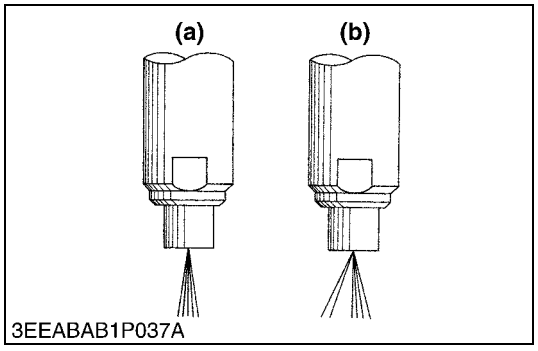

Nozzle Spraying Condition

1. Set the injection nozzle to a nozzle tester, and check the nozzle spraying condition.
2. If the spraying condition is damaged, replace the nozzle piece.

(a) Good **(b) Bad**

9Y1210784GEG0029US0

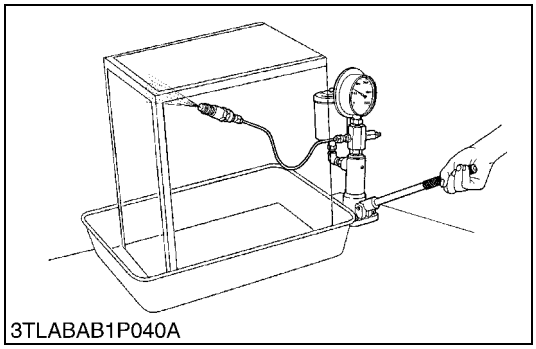
3TLABAB1P040A

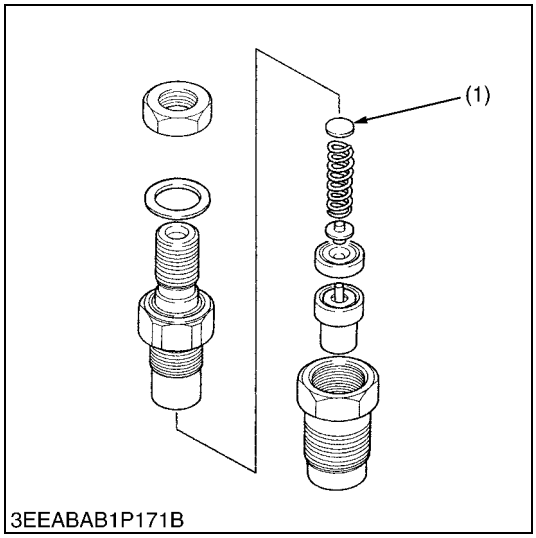

3EEABAB1P171B

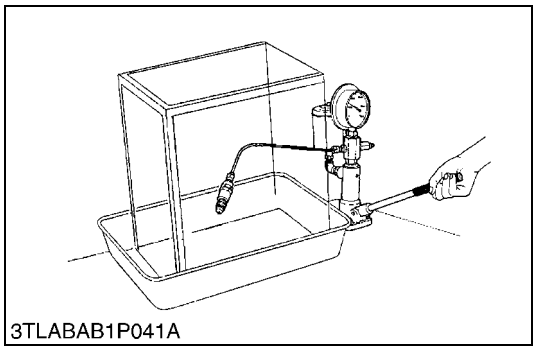
3TLABAB1P041A

Fuel Injection Pressure

1. Set the injection nozzle to a nozzle tester.
2. Slowly move the tester handle to measure the pressure at which fuel begins jetting out from the nozzle.
3. If the measurement is not within the factory specifications, replace the adjusting washer (1) in the nozzle holder to adjust it.

(Reference)

- Pressure variation with 0.01 mm (0.0004 in.) difference of adjusting washer thickness.
  Approx. 235 kPa (2.4 kgf/cm^2, 34 psi)

Fuel injection pressure	Factory specification	13.73 to 14.70 MPa 140.0 to 150.0 kgf/cm^2 1992 to 2133 psi

(1) Adjusting Washer

9Y1210784ENS0016US0

Valve Seat Tightness

1. Set the injection nozzle to a nozzle tester.
2. Raise the fuel pressure, and keep at 12.75 MPa (130 kgf/cm^2, 1849 psi) for 10 seconds.
3. If any fuel leak is found, replace the nozzle piece.

Valve seat tightness	Factory specification	No fuel leak at 12.75 MPa 130.0 kgf/cm^2 1849 psi

9Y1210784GEG0031US0

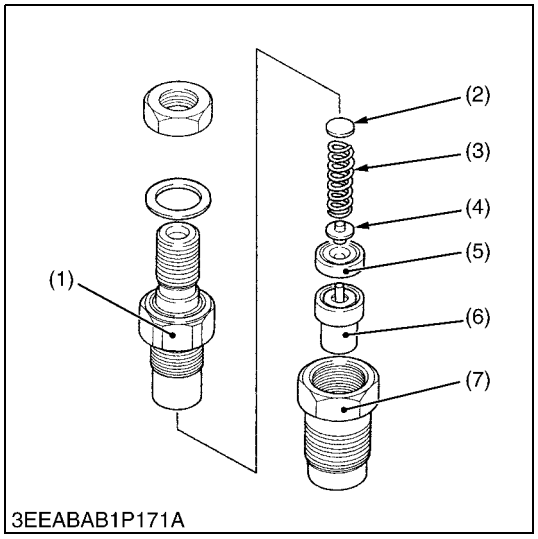

3EEABAB1P171A

Nozzle Holder

1. Secure the nozzle retaining nut (7) with a vise.
2. Remove the nozzle holder (1), and take out parts inside.

(When reassembling)

- Assemble the nozzle in clean fuel oil.
- Install the push rod (4), noting its direction.
- After assembling the nozzle, be sure to adjust the fuel injection pressure.

Tightening torque	Nozzle holder	35 to 39 N·m 3.5 to 4.0 kgf·m 26 to 28 lbf·ft
	Overflow pipe retaining nut (Serial No.: below BTZ999)	20 to 24 N·m 2.0 to 2.5 kgf·m 15 to 18 lbf·ft
	Overflow pipe retaining nut (Serial No.: above BU0001)	35 to 39 N·m 3.5 to 4.0 kgf·m 26 to 28 lbf·ft
	Nozzle holder assembly	49 to 68 N·m 5.0 to 7.0 kgf·m 36 to 50 lbf·ft

(1) Nozzle Holder
(2) Adjusting Washer
(3) Nozzle Spring
(4) Push Rod
(5) Distance Piece
(6) Nozzle Piece
(7) Nozzle Retaining Nut

9Y1210784ENS0017US0

(5) Electrical System

CAUTION

- **To avoid accidental short circuit, be sure to attach the positive cable to the positive terminal before the negative cable is attached to the negative terminal.**
- **Never remove the battery cap while the engine is running.**
- **Keep electrolyte away from eyes, hands and clothes. If you are spattered with it, wash it away completely with water immediately.**
- **Keep open sparks and flames away from the battery at all times. Hydrogen gas mixed with oxygen becomes very explosive.**

IMPORTANT

- **If the machine is to be operated for a short time without battery (using a slave battery for starting), use additional current (lights) while engine is running and insulate terminal of battery. If this advice is disregarded, damage to alternator and regulator may result.**

9Y1210784ENS0018US0

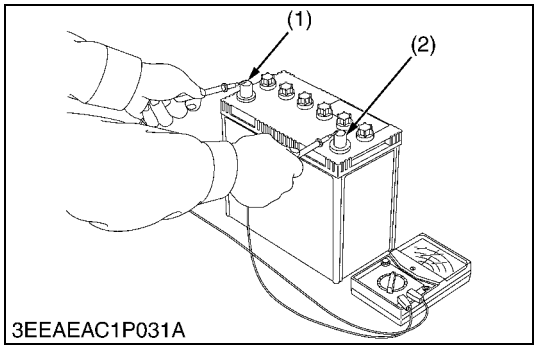

3EEAEAC1P031A

Battery Voltage

1. Stop the engine.
2. Measure the voltage with a circuit tester between the battery terminals.
3. If the battery voltage is less than the factory specification, check the battery specific gravity and recharge the battery.

Battery voltage	Factory specification	More than 12 V

(1) Positive Terminal
(2) Negative Terminal

9Y1210784ENS0019US0

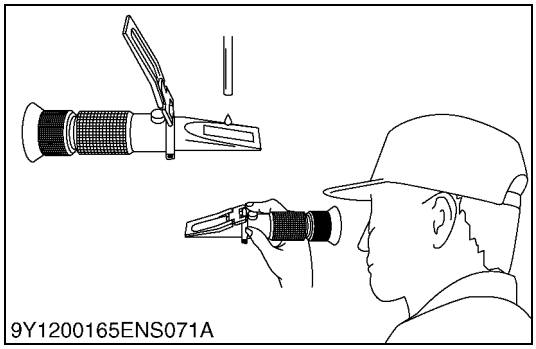
9Y1200165ENS071A

Battery Specific Gravity

1. Measure the specific gravity of the electrolyte in each cell with a battery and coolant tester.
2. If the electrolyte temperature is different from the one that the battery and coolant tester calibrated, correct the specific gravity measurement. Use the formula below in **(Reference)**.
3. If the specific gravity is less than 1.215 (after it is corrected for temperature), charge or replace the battery.
4. If the specific gravity is different between 2 cells by more than 0.05, replace the battery.

(Reference)

- The specific gravity changes with temperature.
  To be accurate, the specific gravity
  decreases by 0.0007 when temperature increases by 1 °C (decreases by 0.0004 when temperature increases by 1 °F),
  increases by 0.0007 when temperature decreases by 1 °C (increases by 0.0004 when temperature decreases by 1 °F).
  Thus, if you refer to 20 °C (68 °F), correct the specific gravity reading by the formula below:
  – Specific gravity at 20 °C = Measured value + 0.0007 × (electrolyte temperature −20 °C)
  – Specific gravity at 68 °F = Measured value + 0.0004 × (electrolyte temperature −68 °F)

Specific Gravity	State of Charge
1.260 Sp. Gr.	100 % Charged
1.230 Sp. Gr.	75 % Charged
1.200 Sp. Gr.	50 % Charged
1.170 Sp. Gr.	25 % Charged
1.140 Sp. Gr.	Very Little Useful Capacity
1.110 Sp. Gr.	Discharged

At an electrolyte temperature of 20 °C (68 °F)

9Y1210784GEG0025US0

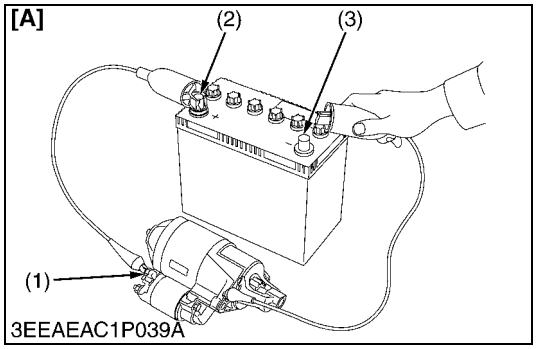

3EEAEAC1P039A

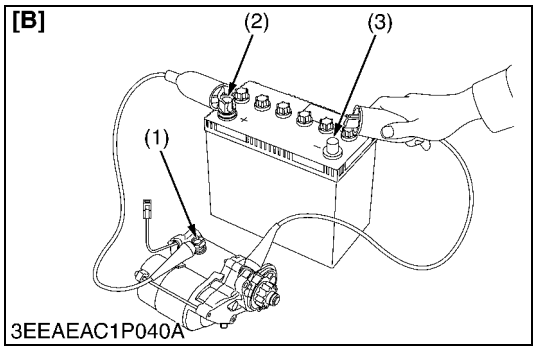

3EEAEAC1P040A

Motor Test

CAUTION

- **Secure the starter to prevent it from jumping up and down while testing the motor.**

1. Disconnect the battery negative cable from the battery.
2. Disconnect the battery positive cable from the battery.
3. Disconnect the leads from the starter **B** terminal.
4. Remove the starter from the engine.
5. Connect a jumper lead from the starter **C** terminal (1) to the battery positive terminal (2).
6. Connect a jumper lead momentarily between the starter's body and the battery negative terminal (3).
7. If the motor does not run, starter is failure.
   Repair or replace the starter.

NOTE

- **B terminal: It is the terminal which connects the cable from the battery to the starter.**
- **C terminal: It is the terminal which connects the cable from the motor to the magnet switch.**

(1) **C** Terminal
(2) Positive Terminal
(3) Negative Terminal

[A] Electromagnetic Drive Type
[B] Planetary Gear Reduction Type

9Y1210784ENS0020US0

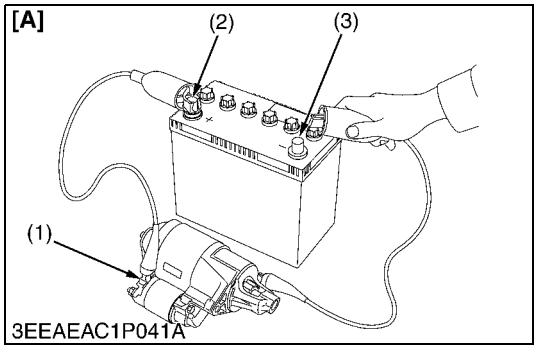

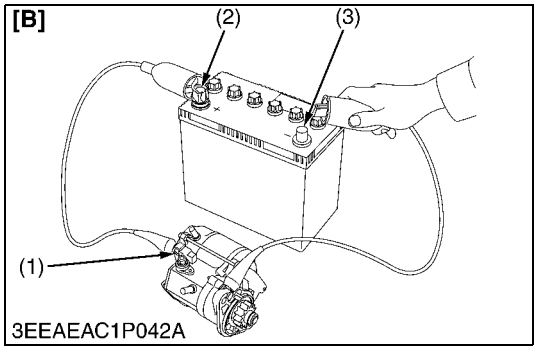

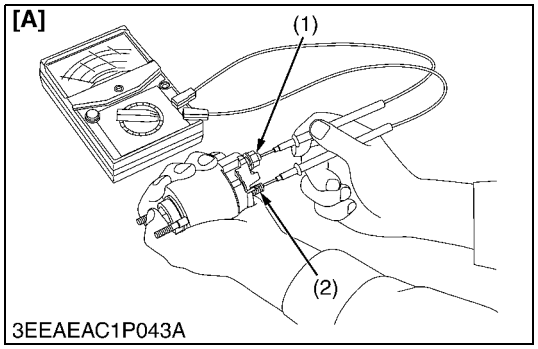

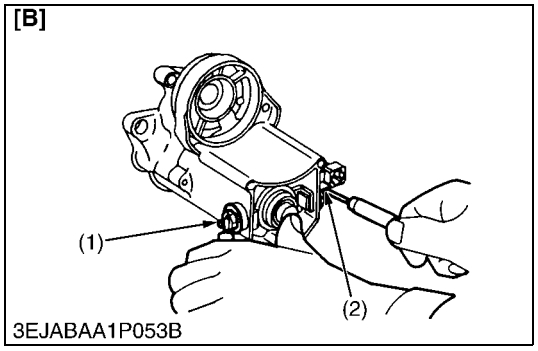

Magnetic Switch Test

1. Disconnect the battery negative cable from the battery.
2. Disconnect the battery positive cable from the battery.
3. Disconnect the leads from the starter **B** terminal.
4. Remove the starter from the engine.
5. Connect a jumper lead from the starter **S** terminal (1) to the battery positive terminal (2).
6. Connect a jumper lead momentarily between the starter's body and the battery negative terminal (3).
7. If the pinion gear does not pop out, the magnetic switch is failure.
   Repair or replace the starter.

■ **NOTE**

- **B terminal: It is the terminal which connects the cable from the battery to the starter.**
- **S terminal: It is the terminal which connects the cable from the starter switch to the magnet switch.**

(1) **S** Terminal
(2) Positive Terminal
(3) Negative Terminal

[A] Electromagnetic Drive Type
[B] Planetary Gear Reduction Type

9Y1210784ENS0021US0

Magnet Switch Continuity Test

1. Check the continuity across the **C** terminal (1) and the **B** terminal (2) with a circuit tester, pushing in the plunger.
2. If not continuous or if a certain value is indicated, replace the magnet switch.

(1) **C** Terminal
(2) **B** Terminal

[A] Electromagnetic Drive Type
[B] Gear Reduction Type

9Y1210784ENS0022US0



Alternator on Unit Test

(Before testing)

- Before alternator on unit test, check the battery terminal connections, circuit connection, fan belt tension, charging indicator lamp, fuses on the circuit, and abnormal noise from the alternator.
- Prepare full charged battery for the test.

■ **NOTE**

- **Be careful not to touch the rotating engine parts while engine is running.**
  Keep safety distance from the engine rotating parts.

1. Start the engine.
2. When the engine is operating measure the voltage between two battery terminals. If the voltage is between 13.8 V and 14.8 V, the alternator is operating normally.
3. If the results of alternator on unit test are not within the specifications, disassemble the alternator and check the each component part for finding out the failure. See the **"DISASSEMBLING AND ASSEMBLING"** and **"SERVICING"** for alternator.

Regulating voltage at no load	Factory specification	13.8 to 14.8 V at 25 °C (77 °F)

9Y1210784ENS0023US0

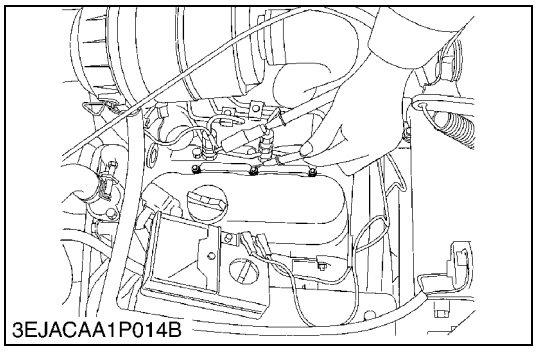

Glow Plug Lead Terminal Voltage

1. Turn the key switch to the **"GLOW (or PREHEAT)"** position, and measure the voltage with a circuit tester between the lead terminal and the engine body.
2. If the voltage differs from the battery voltage, the wiring harness or main switch is faulty.

Voltage	Main switch key at **GLOW** (or **PREHEAT**)	Approx. battery voltage

9Y1210784ENS0024US0

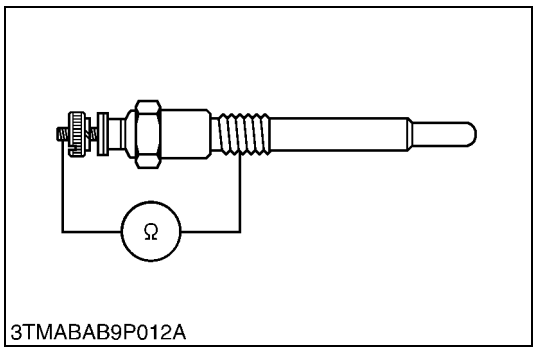

Glow Plug Continuity

1. Remove the glow plug.
2. Measure the resistance with a circuit tester between the glow plug terminal and the glow plug housing.
3. If the factory specification is not indicated, glow plug is faulty.

Resistance	Factory specification	Approx. 0.9 Ω

9Y1210784ENS0025US0

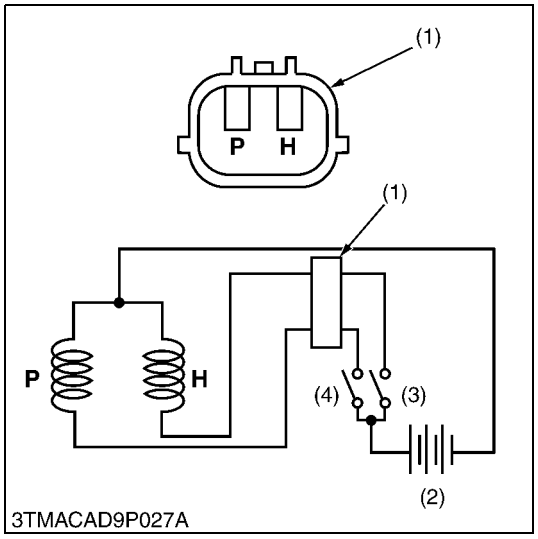

3TMACAD9P027A

Engine Stop Solenoid

1. Remove the engine stop solenoid from the engine.
2. Connect the jumper leads from the pulling coil **P** terminal to the switch (4), and from switch (4) to the battery positive terminal.
3. Connect the jumper leads from the holding coil **H** terminal to the switch (3), and from switch (3) to the battery positive terminal.
4. Connect the jumper leads from the engine stop solenoid body to the battery negative terminal.
5. When switch (4) is turn on, the plunger pull into the solenoid body and then turn off the switch (4), the plunger comes out.
6. Turn on the switch (3) then turn on the switch (4), the plunger pull into the solenoid body and it keep in holding position after turn off the switch (4).
7. If the plunger is not attracted, the engine stop solenoid is faulty.

■ **IMPORTANT**

- **Never apply the current for pulling coil more than two seconds when inspecting.**

(1) Connector
(2) Battery
(3) Switch for Holding Coil
(4) Switch for Pulling Coil

P: Terminal for Pulling Coil
H: Terminal for Holding Coil

9Y1210784ENS0026US0

[2] DISASSEMBLING AND ASSEMBLING

(1) Draining Oil and Coolant

Draining Oil and Coolant

CAUTION

- **Never remove radiator cap until coolant temperature is below its boiling point. Then loosen cap slightly to the stop to relieve any excess pressure before removing cap completely.**

1. Prepare a bucket. Open the drain valve to drain coolant.
2. Prepare an oil pan. Remove the drain plug to drain engine oil in the pan.

9Y1210784ENS0027US0

(2) External Components

Air Cleaner and Muffler

1. Remove the air cleaner.
2. Remove muffler retaining nuts to remove the muffler.

(When reassembling)

- Install the muffler gasket so that its steel side face the muffler.

9Y1210784ENS0028US0

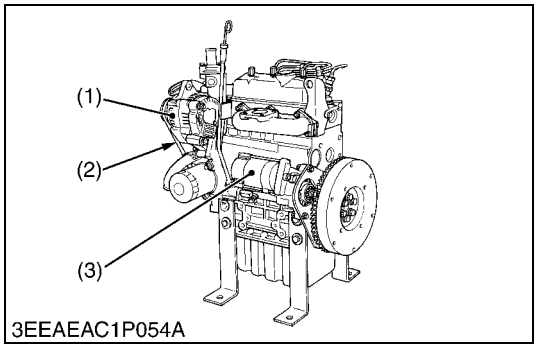

3EEAEAC1P054A

Alternator and Fan Belt

1. Remove the alternator (1).
2. Remove the fan belt (2).
3. Remove the starter (3).

(When reassembling)

- Check to see that there are no cracks on the belt surface.

■ **IMPORTANT**

- **After reassembling the fan belt, be sure to adjust the fan belt tension.**

(1) Alternator
(2) Fan Belt
(3) Starter

9Y1210784ENS0029US0

(3) Cylinder Head and Valve



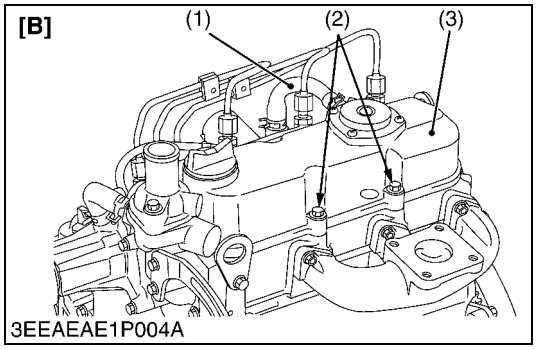

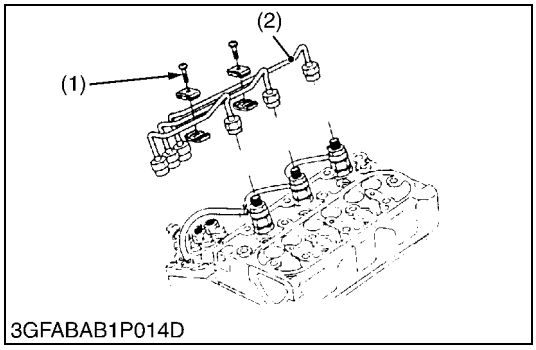

Cylinder Head Cover

1. Disconnect the breather hose (1).
2. Remove the cylinder head cover screw (2).
3. Remove the cylinder head cover (3).

(When reassembling)

- Check to see if the cylinder head cover gasket is not damaged.

[D1005-E4B/E4BG, D1105-E4B/E4BG, V1505-E4B/E4BG]

Tightening torque	Cylinder head cover screw	7 to 8 N·m 0.7 to 0.9 kgf·m 5 to 6 lbf·ft

[D1305-E4B/E4BG]

Tightening torque	Cylinder head cover screw	9.81 to 11.2 N·m 1.00 to 1.15 kgf·m 7.24 to 8.31 lbf·ft

(1) Breather Hose
(2) Cylinder Head Cover Screw
(3) Cylinder Head Cover

[A] D1005-E4B/E4BG, D1105-E4B/E4BG, V1505-E4B/E4BG
[B] D1305-E4B/E4BG

9Y1210784ENS0030US0

Injection Pipes

1. Loosen the screws to the pipe clamp (1).
2. Detach the injection pipes (2).

(When reassembling)

- Send compressed air into the pipes to blow out dust. Then, reassemble the pipes in the reverse order.

Tightening torque	Injection pipe retaining nut	25 to 34 N·m 2.5 to 3.5 kgf·m 18 to 25 lbf·ft

(1) Pipe Clamp (2) Injection Pipe

9Y1210784ENS0031US0

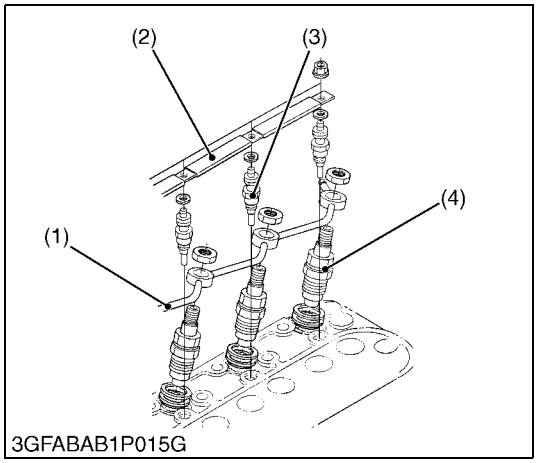

3GFABAB1P015G

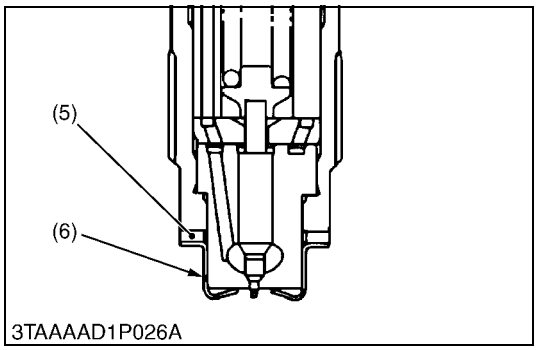

3TAAAAD1P026A

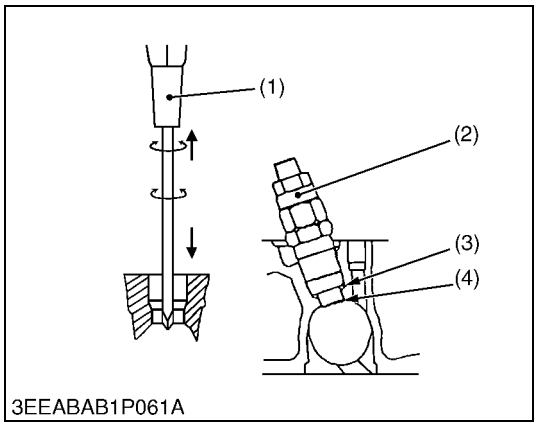

3EEABAB1P061A

Nozzle Holder Assembly and Glow Plug

1. Remove the overflow pipe (1).
2. Remove the nozzle holder assemblies (4).
3. Remove the copper gasket (5) and heat seal (6).
4. Remove the lead (2) from the glow plugs (3).
5. Remove the glow plugs (3).

(When reassembling)

- Replace the copper gasket and heat seal with new one.

Tightening torque	Overflow pipe retaining nut (Serial No.: below BTZ999)	20 to 24 N·m 2.0 to 2.5 kgf·m 15 to 18 lbf·ft
	Overflow pipe retaining nut (Serial No.: above BU0001)	35 to 39 N·m 3.5 to 4.0 kgf·m 26 to 28 lbf·ft
	Nozzle holder assembly	49 to 68 N·m 5.0 to 7.0 kgf·m 37 to 50 lbf·ft
	Glow plug	7.9 to 14 N·m 0.80 to 1.5 kgf·m 5.8 to 10 lbf·ft

(1) Overflow Pipe
(2) Lead
(3) Glow Plug
(4) Nozzle Holder Assembly
(5) Copper Gasket
(6) Heat Seal

9Y1210784ENS0032US0

Nozzle Heat Seal Service Removal Procedure

■ **IMPORTANT**

- **Use a plus (phillips head) screw driver (1) that has a diameter which is bigger than the heat seal hole (Approx. 6 mm (1/4 in.)).**

1. Drive screw driver (1) lightly into the heat seal hole.
2. Turn screw driver three or four times each way.
3. While turning the screw driver, slowly pull the heat seal (4) out together with the injection nozzle gasket (3).
4. If the heat seal drops, repeat the above procedure.

(When reassembling)

- Heat seal and injection nozzle gasket must be changed when the injection nozzle is removed for cleaning or for service.

(1) Plus Screw Driver
(2) Nozzle Holder
(3) Injection Nozzle Gasket
(4) Heat Seal

9Y1210784ENS0033US0

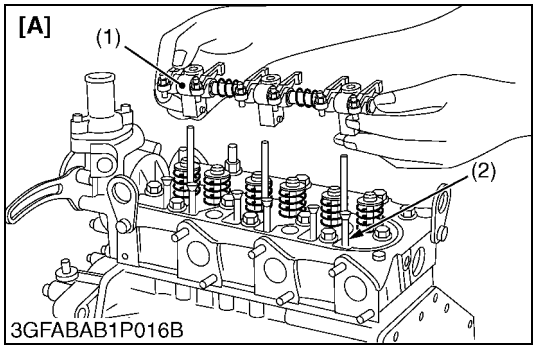

3GFABAB1P016B

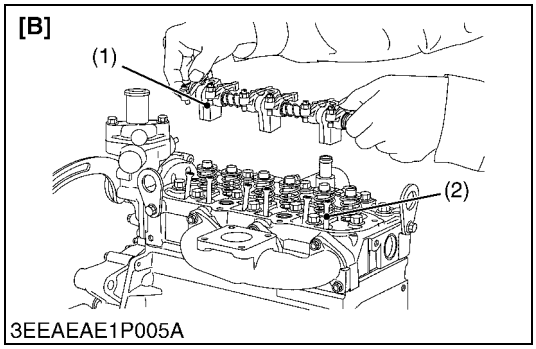

3EEAEAE1P005A

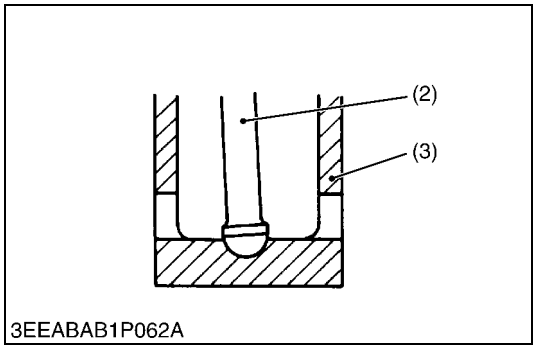

3EEABAB1P062A

Rocker Arm and Push Rod

1. Remove the rocker arm bracket screws / nuts.
2. Detach the rocker arm assembly (1).
3. Remove the push rods (2).

(When reassembling)

- When putting the push rods (2) onto the tappets (3), check to see if their ends are properly engaged with the dimples.

■ **IMPORTANT**

- **After installing the rocker arm, be sure to adjust the valve clearance.**

[D1005-E4B/E4BG, D1105-E4B/E4BG, V1505-E4B/E4BG]

Tightening torque	Rocker arm bracket nut	22 to 26 N·m 2.2 to 2.7 kgf·m 16 to 19 lbf·ft

[D1305-E4B/E4BG]

Tightening torque	Rocker arm bracket screw	22 to 26 N·m 2.2 to 2.7 kgf·m 16 to 19 lbf·ft

(1) Rocker Arm Assembly
(2) Push Rod
(3) Tappet

[A] D1005-E4B/E4BG, D1105-E4B/E4BG, V1505-E4B/E4BG
[B] D1305-E4B/E4BG

9Y1210784ENS0034US0

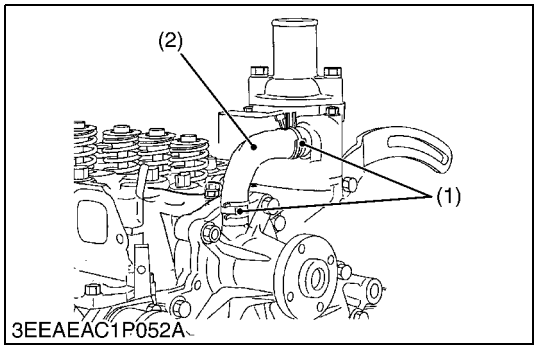

3EEAEAC1P052A

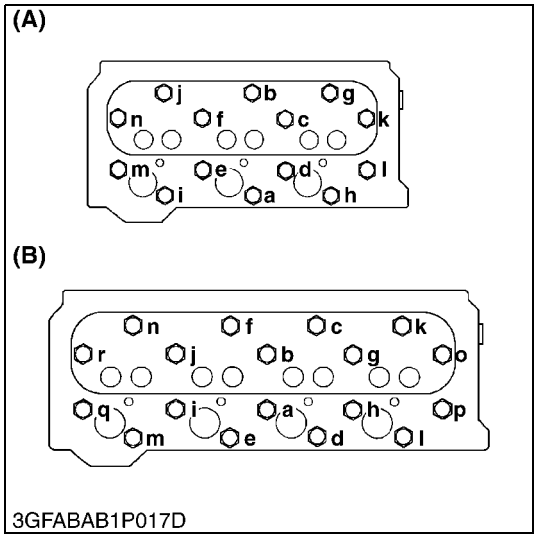

3GFABAB1P017D

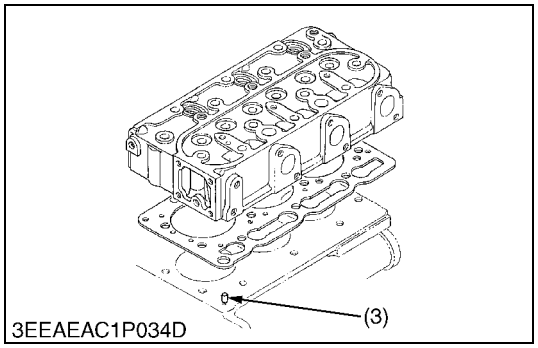

3EEAEAC1P034D

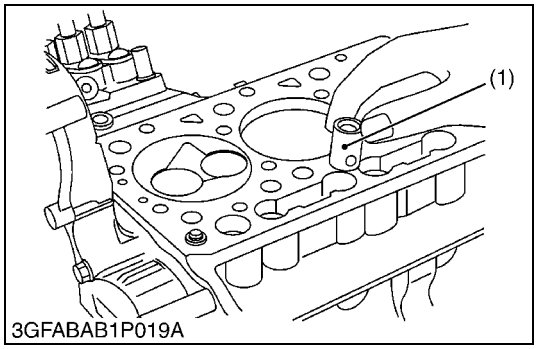

3GFABAB1P019A

Cylinder Head and Cylinder Head Gasket

1. Loosen the pipe clamps (1), and remove the water return pipe (2).
2. Remove the cylinder head screw in the order of **"n"** or **"r"** to **"a"** and remove the cylinder head.
3. Remove the cylinder head gasket.

(When reassembling)

- Replace the cylinder head gasket with new one.
- When mounting the gasket, set it to the pin pipe holes. Take care not to mount it reversely.
- The cylinder head should be free of scratches and dust.
- Install the cylinder head, using care not to damage the gasket.
- After applying engine oil to the thread of screws, tighten them in several steps and specified sequence **"a"** to **"n"** or **"r"**.

■ **NOTE**

- **Do not use O-ring on the pin pipe.**
- **It is not necessary to retighten the cylinder head screw and to readjust valve clearance after engine warmed up.**

Tightening torque	Cylinder head screw	64 to 68 N·m 6.5 to 7.0 kgf·m 47 to 50 lbf·ft

(1) Clamp
(2) Return Pipe
(3) Pin Pipe

(A) 3 Cylinder
(B) 4 Cylinder
n or r to a: To Loosen
a to n or r: To Tighten

9Y1210784ENS0035US0

Tappets

1. Remove the tappets (1) from the crankcase.

(When reassembling)

- Visually check the contact between tappets and cams for proper rotation. If problem is found, replace tappets.
- Before installing the tappets, apply engine oil thinly around them.

■ **IMPORTANT**

- **Do not change the combination of tappet and tappet guide.**

(1) Tappet

9Y1210784ENS0036US0

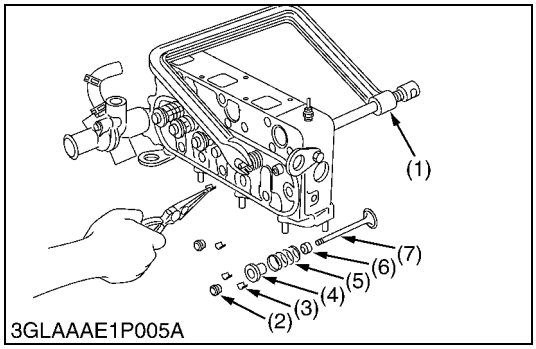

3GLAAAE1P005A

Valves

1. Remove the valve caps (2).
2. Remove the valve spring collet (3), pushing the valve spring retainer (4) by valve spring replacer (1).
3. Remove the valve spring retainer (4), valve spring (5) and valve stem seal (6).
4. Remove the valve (7).

(When reassembling)

- Wash the valve stem and valve guide hole, and apply engine oil sufficiently.
- After installing the valve spring collets, lightly tap the stem to assure proper fit with a plastic hammer.

■ **IMPORTANT**

- **Don't change the combination of valve and valve guide.**

(1) Valve Spring Replacer
(2) Valve Cap
(3) Valve Spring Collet
(4) Valve Spring Retainer
(5) Valve Spring
(6) Valve Stem Seal
(7) Valve

9Y1210784ENS0037US0

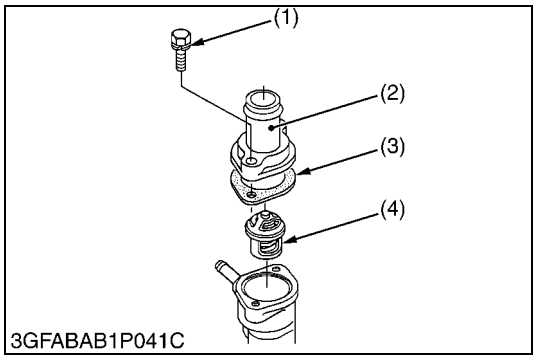

3GFABAB1P041C

Thermostat Assembly

1. Remove the thermostat cover mounting screws (1), and remove the thermostat cover (2).
2. Remove the thermostat assembly (4).

(When reassembling)

- Apply a liquid gasket (Three Bond 1215 or equivalent) only at the thermostat cover side of the gasket (3).

(1) Thermostat Cover Mounting Screw
(2) Thermostat Cover
(3) Thermostat Cover Gasket
(4) Thermostat Assembly

9Y1210784ENS0038US0

(4) Gear Case and Timing Gears

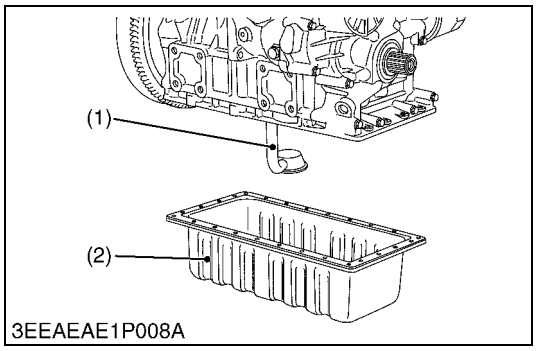

3EEAEAE1P008A

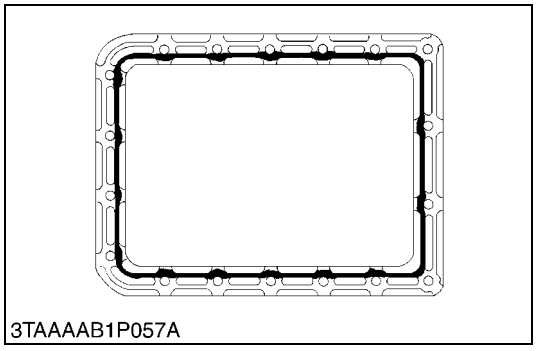
3TAAAAB1P057A

Oil Pan and Oil Strainer (for Extended Oil Pan)

1. Remove the oil pan mounting screws.
2. Remove the oil pan (2).
3. Remove the oil strainer (1).

(When reassembling)

- After cleaning the oil strainer, check to see that the filter mesh in clean, and install it.
- Visually check the O-ring, apply engine oil, and install it.
- Securely fit the O-ring to the oil strainer.
- To avoid uneven tightening, tighten oil pan mounting screws in diagonal order form the center.

■ **IMPORTANT**

- **Scrape off the old adhesive completely. Wipe the sealing surface clean using waste cloth soaked with gasoline.**
- **Apply "liquid gasket" (Three Bond 1207D or equivalent) about 3.0 to 5.0 mm (0.12 to 0.19 in.) thick. Within 20 minutes after the application of liquid gasket, reassemble the components.**

(1) Oil Strainer
(2) Oil Pan

9Y1210784ENS0039US0

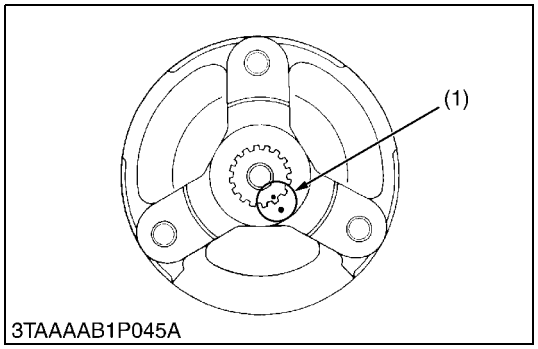

3TAAAAB1P045A

Fan Drive Pulley

1. Secure the flywheel to keep it from turning.
2. Remove the fan drive pulley screw.
3. Draw out the fan drive pulley with a puller.

(When reassembling)

- Install the pulley to crankshaft, aligning the mark (1) on them (3-cylinder engine).
- Apply engine oil to the fan drive pulley retaining screw. And tighten it.

Tightening torque	Fan drive pulley screw	236 to 245 N·m 24.0 to 25.0 kgf·m 174 to 180 lbf·ft

(1) Aligning Mark

9Y1210784ENS0040US0

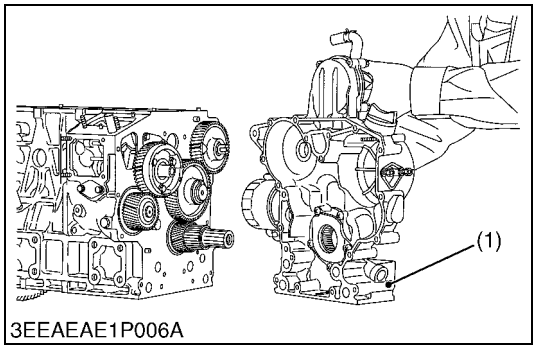

3EEAEAE1P006A

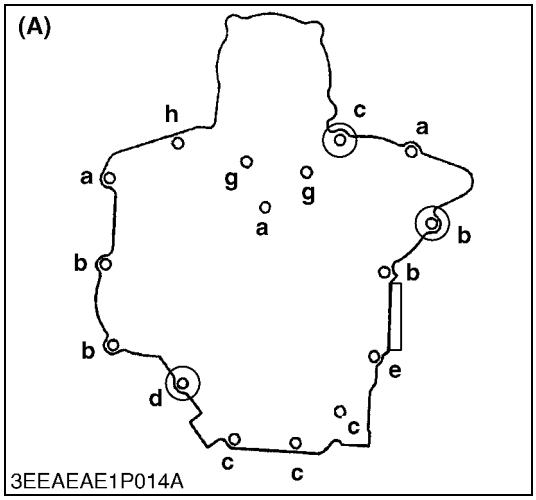

3EEAEAE1P014A

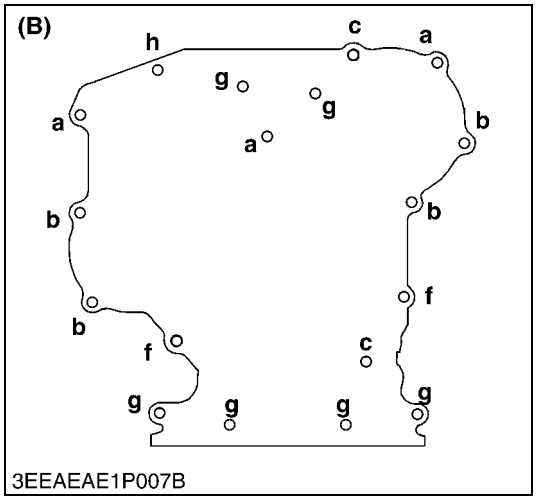

3EEAEAE1P007B

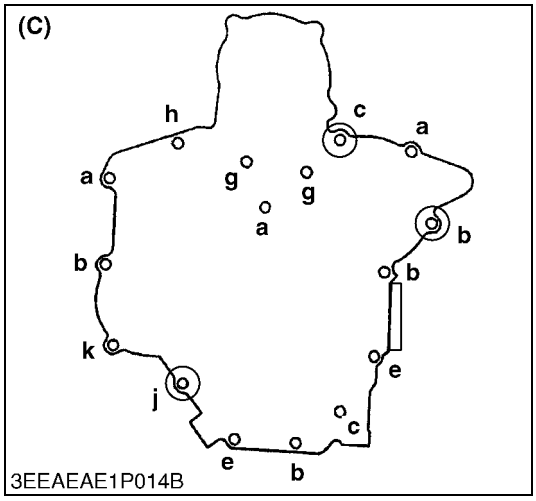

3EEAEAE1P014B

Gear Case

1. Remove the fuel feed pump.
2. Remove the gear case.

(When reassembling)

- Grease thinly to the oil seal, and install it, ensuring the lip does not come off.

(1) Gear Case

(A) Gear Case for Standard Oil Pan
(B) Gear Case for Extended Oil Pan
(C) Gear Case for BG Type (Except D1305-E4BG)

a: Bolt Length = 45 mm (1.8 in.)
b: Bolt Length = 50 mm (2.0 in.)
c: Bolt Length = 55 mm (2.2 in.)
d: Bolt Length = 65 mm (2.6 in.)
e: Bolt Length = 68 mm (2.7 in.)
f: Bolt Length = 70 mm (2.8 in.)
g: Bolt Length = 85 mm (3.3 in.)
h: Nut
j: Bolt Length = 59 mm (2.3 in.)
k: Bolt Length = 82 mm (3.2 in.)

9Y1210784ENS0041US0

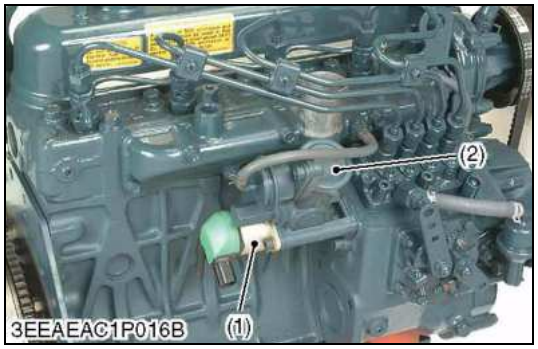

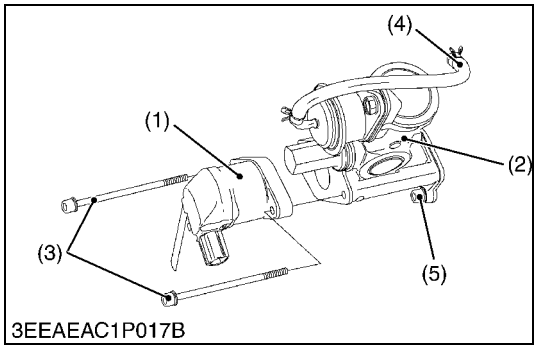

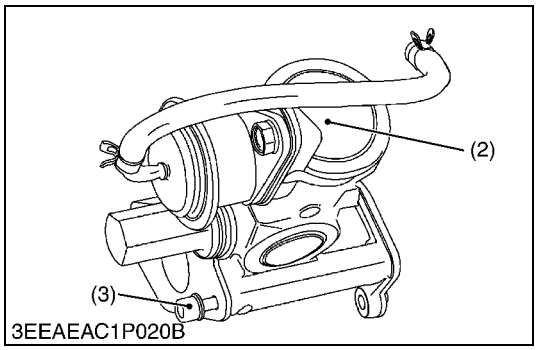

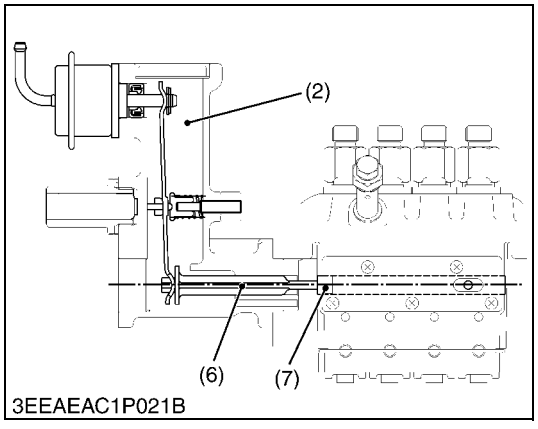

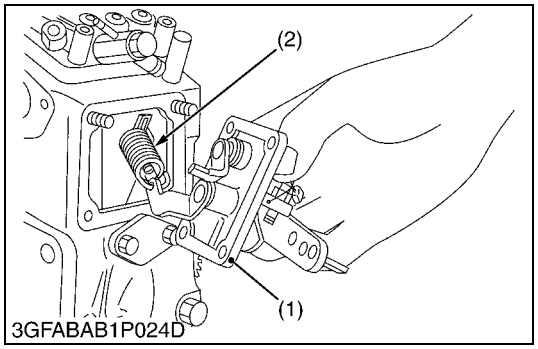

Boost Compensator (equipped with R24 Model)

■ **IMPORTANT**

- **Use the stop solenoid mounting bolt (3) for the dropout prevention of boost compensator (2) and the damage prevention of the guide (6) when detach the boost compensator.**
- **The guide (6) of boost compensator and the control rack (7) should be made the level when you install boost compensator assembly.**

1. Disconnect the hose (4).
2. Remove the stop solenoid mounting bolt (M6 × 87 mm) (3).
3. Remove the stop solenoid (1).
4. Install the stop solenoid mounting bolt (3) in an original position again.
5. Remove the boost compensator mounting bolt (5).
6. Detach the boost compensator assembly (2).
7. Remove the stop solenoid mounting bolt (3) with boost compensator assembly (2).

(When reassembling)

1. Install the stop solenoid mounting bolt (3) in boost compensator assembly (2) and assemble it to the boost compensator installation position at the same time.
2. Tighten the boost compensator mounting bolt (5).
3. Remove the stop solenoid mounting bolt (3).
4. Install the stop solenoid (1) and tighten the mounting bolt (3).

■ **NOTE**

- **Apply a liquid gasket (Three Bond 1217D or equivalent) to the boost compensator body.**

(1) Stop Solenoid
(2) Boost Compensator Assembly
(3) Stop Solenoid Mounting Bolt
(4) Hose
(5) Boost Compensator Mounting Bolt
(6) Guide
(7) Control Rack

9Y1210784ENS0111US0

Speed Control Plate

1. Remove the engine stop solenoid (without R24 model).
2. Remove the speed control plate (1).

(When reassembling)

- Apply a liquid gasket (Three Bond 1215 or equivalent) to both sides of the solenoid cover gasket and control plate gasket.
- Be careful not to drop the governor spring (2) into the crankcase.

(1) Plate
(2) Governor Spring

9Y1210784ENS0042US0

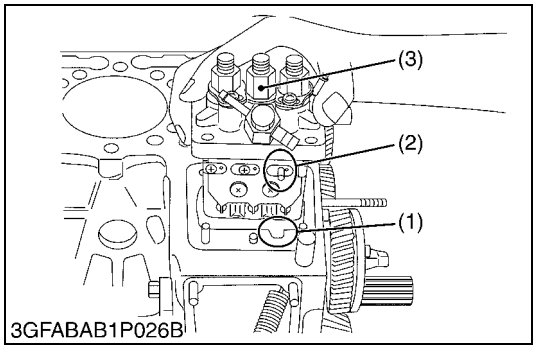

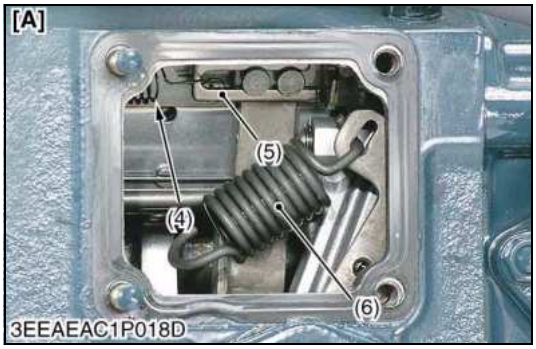

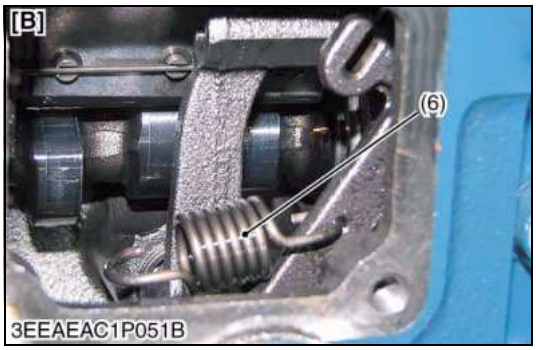

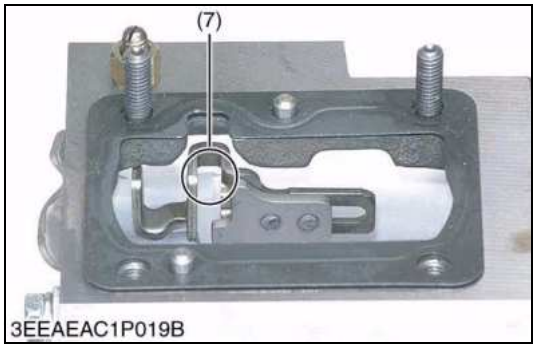

Injection Pump

1. Disconnect the start spring (4) on the thrust lever side (5).
2. Align the control rack pin (2) with the notch (1) on the crankcase, and remove the injection pump (3).
3. Remove the injection pump shims.
4. In principle, the injection pump should not be disassembled.

(When reassembling)

- When installing the injection pump, insert the control rack pin (2) firmly into the groove (7) of the thrust lever of fork lever.

■ **NOTE**

- **Addition or reduction of shim (0.05 mm, 0.0020 in.) delays or advances the injection timing by approx. 0.0087 rad (0.5 °).**
- **In disassembling and replacing, be sure to use the same number or new gasket shims with the same thickness.**

(1) Notch
(2) Control Rack Pin
(3) Injection Pump
(4) Start Spring
(5) Thrust Lever
(6) Governor Spring
(7) Groove

[A] Basic Model
[B] BG Model

9Y1210784ENS0043US0

[A]

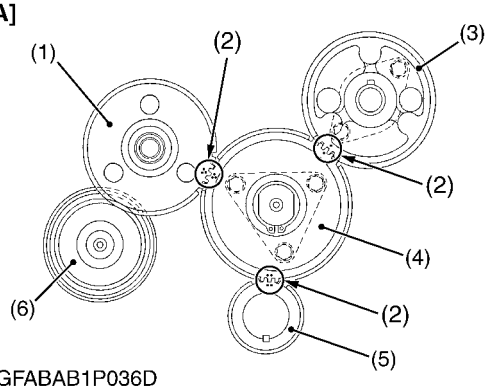

3GFABAB1P036D

[B]

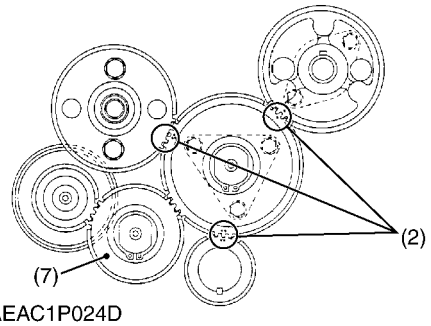

3EEAEAC1P024D

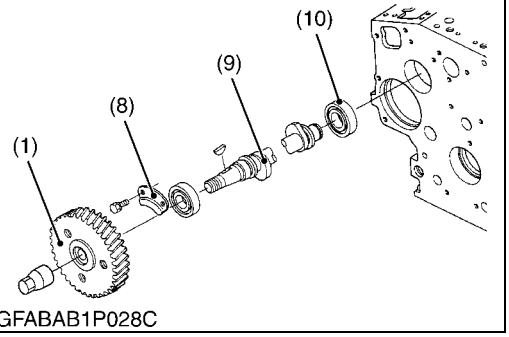

3GFABAB1P028C

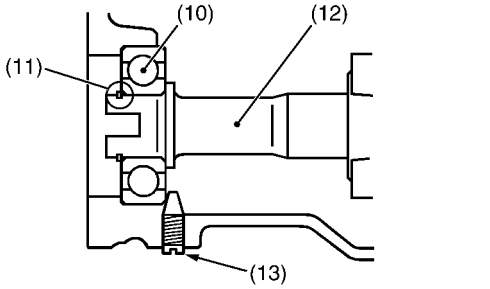

3GFABAB1P031D

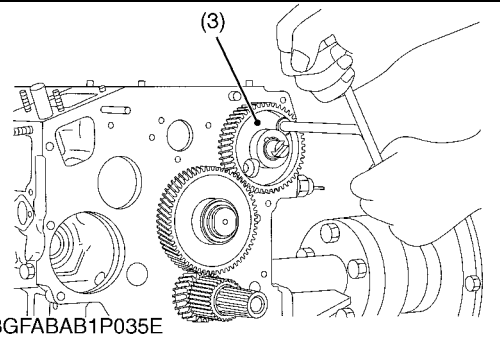

3GFABAB1P035E

Cam Gear, Idle Gear 1, 2 and Governor Gear

1. Remove the idle gear 2 (7) / idle gear 1 (4).
2. Remove the fuel camshaft stopper (8).
3. Draw out the fuel cam gear (1) with fuel camshaft (9).
4. Remove the camshaft stopper bolt.
5. Remove the cam gear (3) with camshaft.
6. Remove the external snap ring (11) from the governor shaft (12).
7. Remove the governor gear (6) with governor shaft (12).

■ **NOTE**

- **Three-lever type fork lever**
  To remove the governor shaft, follow the procedures in 5, 6 above and never remove fork lever and the max torque limiter.

(When reassembling)

- Apply engine oil thinly to the fuel camshaft before installation.
- Make sure to assemble the external snap ring of the governor shaft.
- Check the governor shaft for smooth rotation.

■ **IMPORTANT**

- **There is a model of idle gear 1 (4) and idle gear 2 (7) by the difference of the method of transmission the power to the governor gear (6).**
- **When replacing the ball bearing of governor shaft, securely fit the ball bearing (10) to the crankcase, apply an adhesive (Three Bond 1324B or equivalent) to the set screw (13), and fasten the screw until its tapered part contacts the circumferential end of the ball bearing.**
- **When installing the idle gear, be sure to align the alignment marks on each gears.**

(1) Fuel Cam Gear
(2) Alignment Mark
(3) Cam Gear
(4) Idle Gear 1
(5) Crank Gear
(6) Governor Gear
(7) Idle Gear 2
(8) Fuel Camshaft Stopper
(9) Fuel Camshaft
(10) Ball Bearing
(11) External Snap Ring
(12) Governor Shaft
(13) Set Screw

[A] One Idle Gear Type
[B] Two Idle Gear Type

9Y1210784ENS0044US0

(5) Piston and Connecting Rod

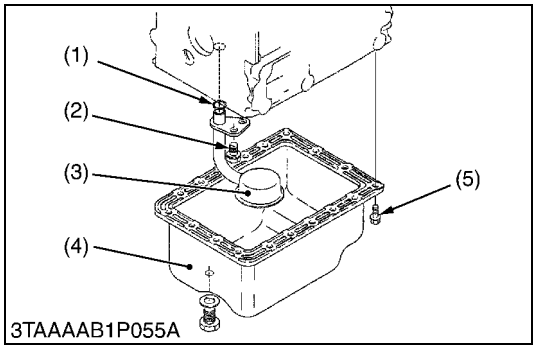

3TAAAAB1P055A

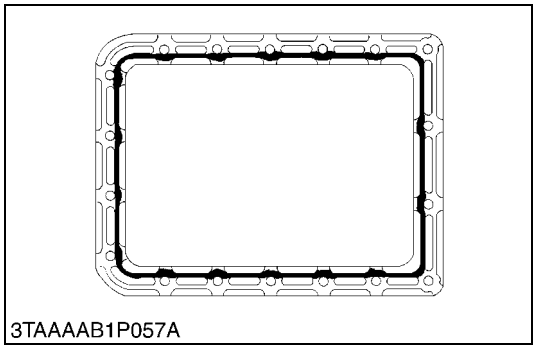
3TAAAAB1P057A

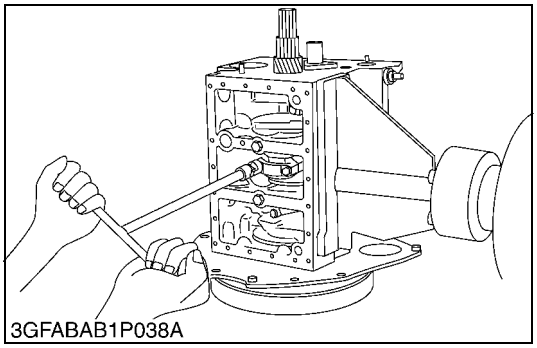
3GFABAB1P038A

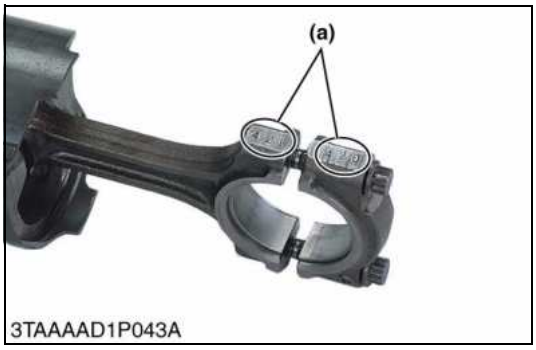

3TAAAAD1P043A

Oil Pan and Oil Strainer (for Standard Oil Pan)

1. Remove the oil pan mounting screws (5).
2. Remove the oil pan (4).
3. Remove the oil strainer (3).

(When reassembling)

- After cleaning the oil strainer, check to see that the filter mesh in clean, and install it.
- Visually check the O-ring (1), apply engine oil, and install it.
- Securely fit the O-ring to the oil strainer.
- To avoid uneven tightening, tighten oil pan mounting screws in diagonal order form the center.

■ **IMPORTANT**

- **Scrape off the old adhesive completely. Wipe the sealing surface clean using waste cloth soaked with gasoline.**
- **Apply "liquid gasket" (Three Bond 1207D or equivalent) about 3.0 to 5.0 mm (0.12 to 0.19 in.) thick. Within 20 minutes after the application of liquid gasket, reassemble the components.**

(1) O-ring
(2) Screw
(3) Oil Strainer
(4) Oil Pan
(5) Oil Pan Mounting Screw

9Y1210784ENS0045US0

Connecting Rod

1. Remove the connecting rod cap.

(When reassembling)

- Align the marks **(a)** with each other. (Face the marks toward the injection pump.)
- Apply engine oil to the connecting rod screws and lightly screw it in by hand, then tighten it to the specified torque.
  If the connecting rod screw won't be screwed in smoothly, clean the threads.
  If the connecting rod screw is still hard to screw in, replace it.

Tightening torque	Connecting rod screw	42 to 46 N·m 4.2 to 4.7 kgf·m 31 to 33 lbf·ft

(a) Mark

9Y1210784ENS0046US0

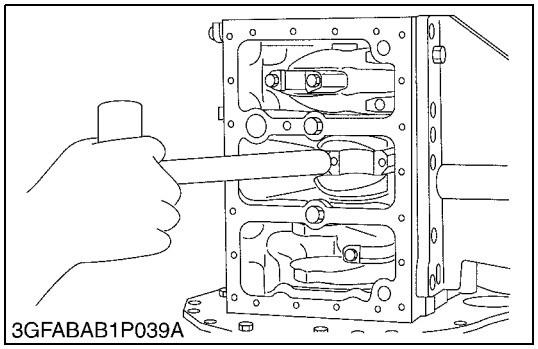
3GFABAB1P039A

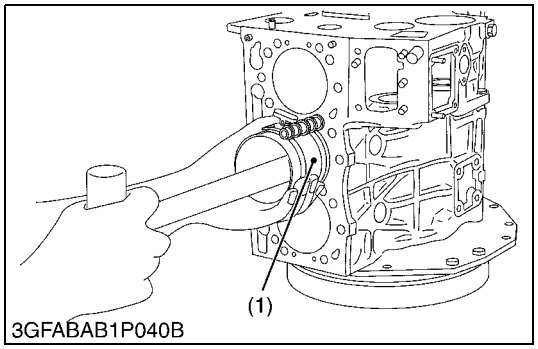

3GFABAB1P040B

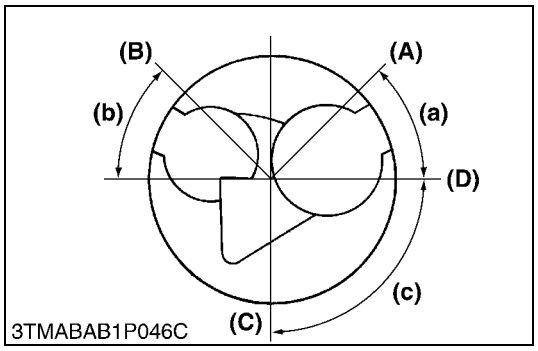

3TMABAB1P046C

Pistons

1. Turn the flywheel and bring the piston to top dead center.
2. Draw out the piston upward by lightly tapping it from the bottom of the crankcase with the grip of a hammer.
3. Draw out the other piston in the same method as above.

(When reassembling)

- Before inserting the piston into the cylinder, apply enough engine oil to the piston.
- When inserting the piston into the cylinder, face the mark on the connecting rod to the injection pump.

■ **IMPORTANT**

- **Do not change the combination of cylinder and piston. Make sure of the position of each piston by marking. For example, mark "1" on the No.1 piston.**
- **When installing the piston into the cylinder, place the gaps of all the piston rings as shown in the figure.**
- **Carefully insert the pistons using a piston ring compressor (1). Otherwise, their chrome-plated section may be scratched, causing trouble inside the cylinder.**

(1) Piston Ring Compressor

(A) Top Ring Gap
(B) Second Ring Gap
(C) Oil Ring Gap
(D) Piston Pin Hole

(a) 0.79 rad (45 °)
(b) 0.79 rad (45 °)
(c) 1.6 rad (90 °)

9Y1210784ENS0047US0

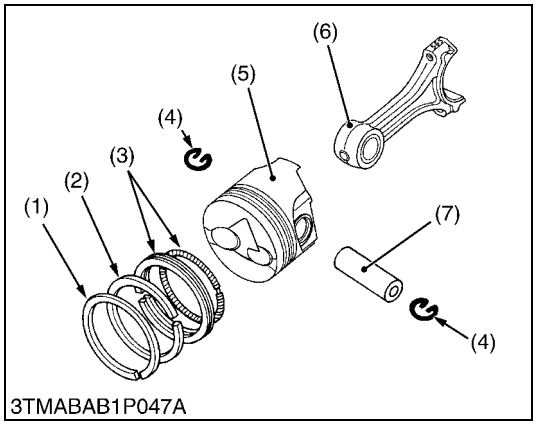

3TMABAB1P047A

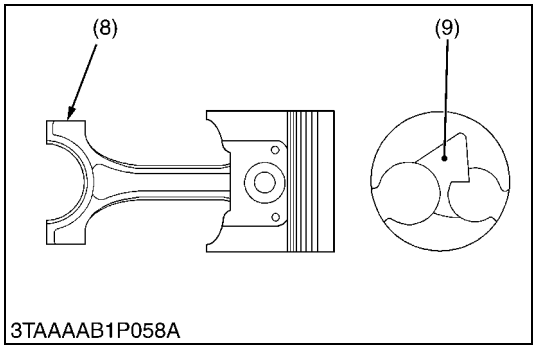

3TAAAAB1P058A

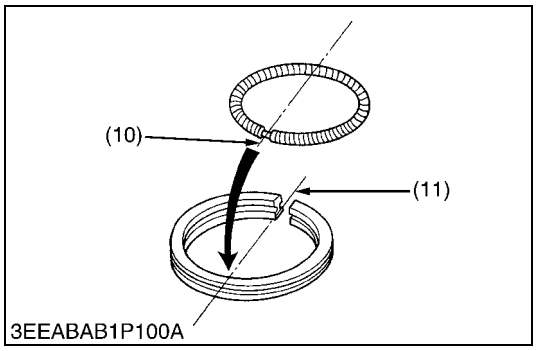

3EEABAB1P100A

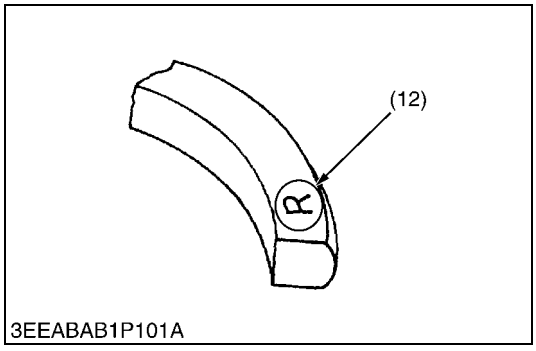

3EEABAB1P101A

Piston Ring and Connecting Rod

1. Remove the piston rings using a piston ring tool.
2. Remove the piston pin (7), and separate the connecting rod (6) from the piston (5).

(When reassembling)

- When installing the ring, assemble the rings so that the manufacturer's mark (12) near the gap faces the top of the piston.
- When installing the oil ring onto the piston, place the expander joint (10) on the opposite side of the oil ring gap (11).
- Apply engine oil to the piston pin.
- When installing the connecting rod to the piston, immerse the piston in 80 °C (176 °F) oil for 10 to 15 minutes and insert the piston pin to the piston.
- When installing the connecting rod to the piston, align the mark (8) on the connecting rod to the fan-shaped concave (9).

■ **NOTE**

- **Mark the same number on the connecting rod and the piston so as not to change the combination.**

(1) Top Ring
(2) Second Ring
(3) Oil Ring
(4) Piston Pin Snap Ring
(5) Piston
(6) Connecting Rod
(7) Piston Pin
(8) Mark
(9) Fan-shaped Concave
(10) Expander Joint
(11) Oil Ring Gap
(12) Manufacturer's Mark

9Y1210784ENS0048US0

(6) Flywheel and Crankshaft

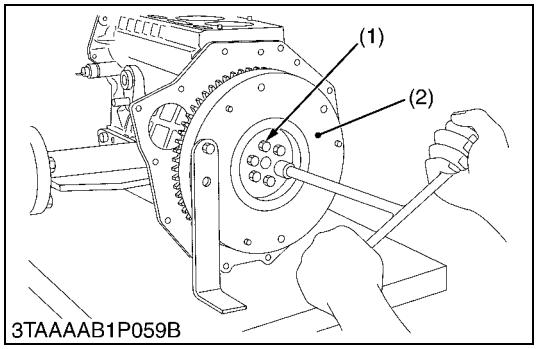

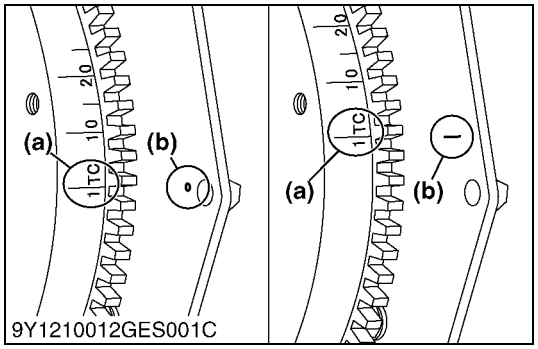



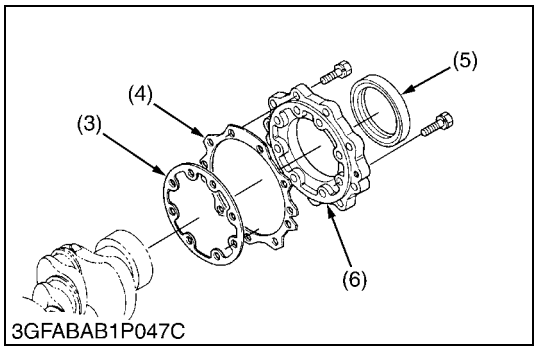

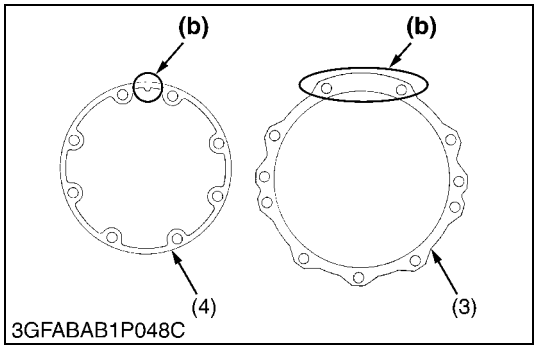

Flywheel

1. Secure the flywheel to keep it from turning, using a flywheel stopper.
2. Remove all flywheel screws (1) and then remove the flywheel (2).

(When reassembling)

- Align the **"1TC"** mark **(a)** on the outer surface of the flywheel horizontally with the alignment mark **(b)** on the rear end plate. Now fit the flywheel in position.
- Apply engine oil to the threads and the undercut surface of the flywheel screw and fit the screw.

Tightening torque	Flywheel screw	54 to 58 N·m 5.5 to 6.0 kgf·m 40 to 43 lbf·ft

(1) Flywheel Screw
(2) Flywheel
(a) 1TC Mark
(b) Alignment Mark

9Y1210784ENS0049US0

Bearing Case Cover

1. Remove the bearing case cover mounting screws.
2. Remove the bearing case cover (6).

■ **IMPORTANT**

- **The length of inside screws (1) and outside screws (2) are different. Do not teke a mistake using inside screws and outside screws.**

(When reassembling)

- Fit the bearing case gasket (3) and the bearing case cover gasket (4) with correct directions.
- Install the bearing case cover (6) to position the casting mark **"UP"** on it upward.
- Apply engine oil to the oil seal (5) lip and take care that it is not rolled when installing.
- Tighten the bearing case cover mounting screws with even force on the diagonal line.

Tightening torque	Bearing case cover mounting screw	10.8 to 12.2 N·m 1.10 to 1.25 kgf·m 7.96 to 9.04 lbf·ft

(1) Bearing Case Cover Mounting Screw (Inside) (Long)
(2) Bearing Case Cover Mounting Screw (Outside) (Short)
(3) Bearing Case Gasket
(4) Bearing Case Cover Gasket
(5) Oil Seal
(6) Bearing Case Cover
(a) Top Mark "UP"
(b) Upside

9Y1210784ENS0050US0

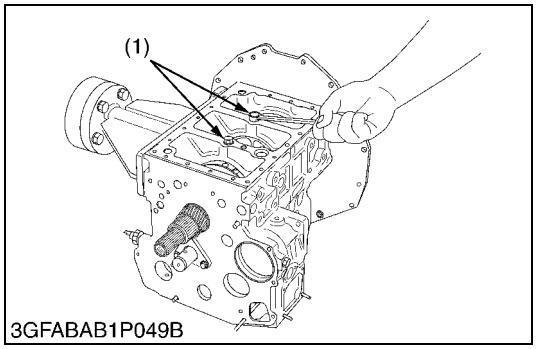

3GFABAB1P049B

Crankshaft Assembly (except D1305-E4B/E4BG)

1. Remove the main bearing case screw 2 (1).
2. Pull out the crankshaft assembly.

■ **IMPORTANT**

- **Take care to protect crankshaft bearing 1 from scratches, caused by the crank gear, etc.. (Wrap the gear in vinyl tape, etc.)**

(When reassembling)

- Clean the oil passage of the crankshaft with compressed air.
- Apply oil to the main bearing case screw 2 (1).
- Install the crankshaft assembly, aligning the screw hole of main bearing case with the screw hole of crankcase.

Tightening torque	Main bearing case screw 2	49 to 53 N·m 5.0 to 5.5 kgf·m 37 to 39 lbf·ft

(1) Main Bearing Case Screw 2

9Y1210784ENS0051US0

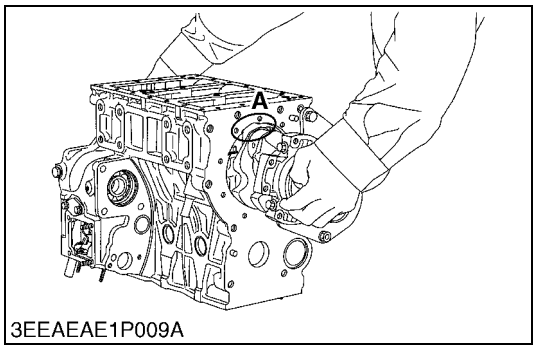

3EEAEAE1P009A

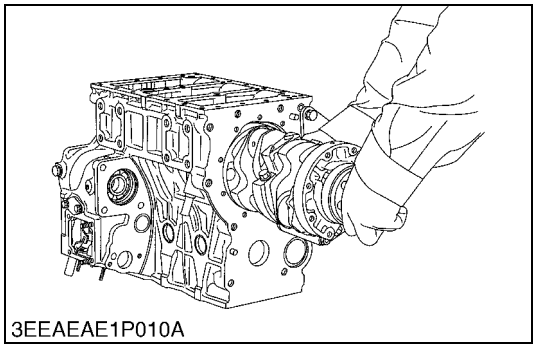
3EEAEAE1P010A

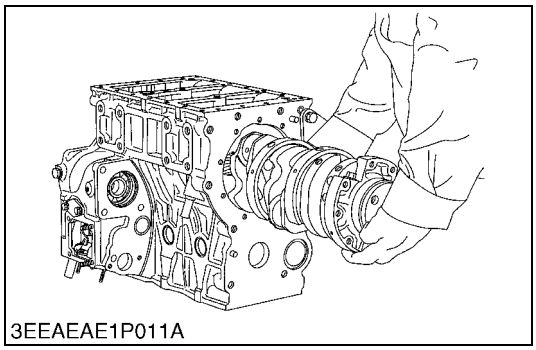
3EEAEAE1P011A

Crankshaft Assembly (D1305-E4B/E4BG)

1. Remove the main bearing case screw 2.
2. Turn the crankshaft to set the crankpin of the third cylinder to the **"A"**. Then draw out the crankshaft until the crankpin of the second cylinder comes to the center of the third cylinder.
3. Turn the crankshaft by 2.09 rad (120 °) counterclockwise to set the crankpin of the second cylinder to the **"A"**. Draw out the crankshaft until the crankpin of the first cylinder comes to the center of third cylinder.
4. Repeat the above steps to draw out all the crankshaft.

(When reassembling)

- Clean the oil passage of the crankshaft with compressed air.
- Install the crankshaft assembly, aligning the screw hole of main bearing case screw 2 with the screw hole of crankcase.
- When tightening the main bearing case 2, apply oil to the main bearing case screw 2 and screw by hand before tightening the specific torque. If not smooth to screw by hand, align the screw holes between the crankcase and the main bearing case.

Tightening torque	Main bearing case screw 2	49 to 53 N·m 5.0 to 5.5 kgf·m 37 to 39 lbf·ft

A: Cut place for removing and installing the crankshaft

9Y1210784ENS0052US0

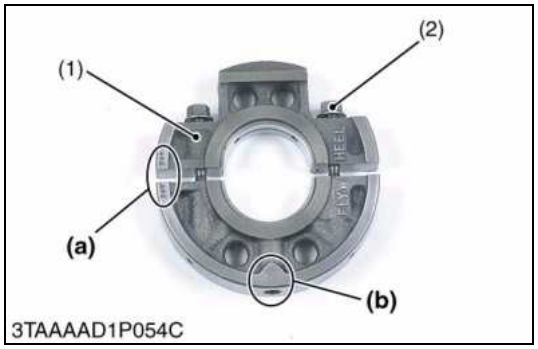

3TAAAAD1P054C

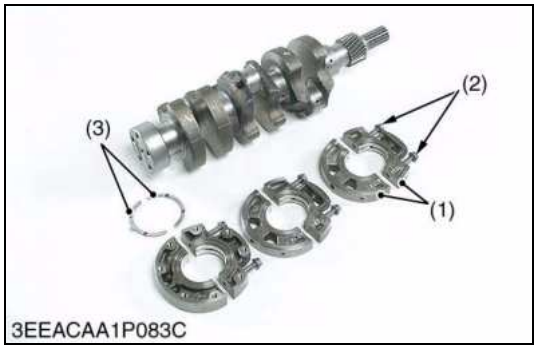

3EEACAA1P083C

Main Bearing Case Assembly

1. Remove the two main bearing case screws 1 (2) of each main bearing cases.
2. Remove the main bearing case from crankshaft.

(When reassembling)

- Clean the oil passage in the main bearing cases.
- Apply clean engine oil on the bearings.
- Install the main bearing case assemblies in the original positions. Since diameters of main bearing cases vary, install them in order of makings **(b)** (**A**, **B**, **C**) from the gear case side.
- Match the alignment numbers **(a)** on the main bearing case assembly 1.
- When installing the main bearing case 1 and 2, face the mark **"FLYWHEEL"** to the flywheel.
- Install the thrust bearing (3) with its oil groove facing outward.
- Confirm that the main bearing case moves smoothly after tightening the main bearing case screw 1 to the specified torque.

Tightening torque	Main bearing case screw 1	30 to 34 N·m 3.0 to 3.5 kgf·m 22 to 25 lbf·ft

(1) Main Bearing Case Assembly 1
(2) Main Bearing Case Screw 1
(3) Thrust Bearing
(a) Alignment Number
(b) Marking (A, B, C)

9Y1210784ENS0053US0

(7) Alternator

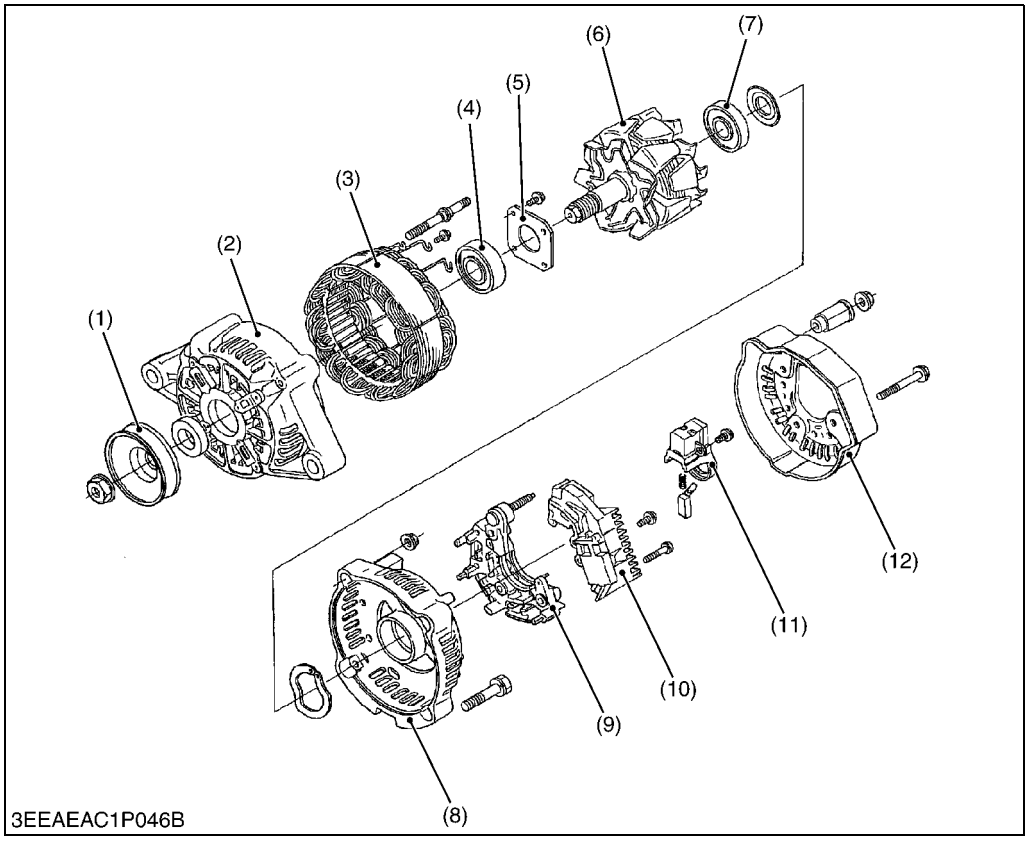

(1) Pulley
(2) Drive End Frame
(3) Stator
(4) Bearing
(5) Retainer Plate
(6) Rotor
(7) Bearing
(8) Rear End Frame
(9) Rectifier
(10) IC Regulator
(11) Brush Holder
(12) Rear End Cover

1. Remove the pulley (1).
2. Remove the rear end cover (12).
3. Remove the brush holder (11).
4. Remove the IC regulator (10).
5. Remove the four screws holding the stator lead wires.
6. Remove the rectifier (9).
7. Remove the rear end frame (8).
8. Press out the rotor (6) from drive end frame (2).
9. Remove the retainer plate (5).
10. Press out the bearing (4) from drive end frame (2) with a press and jig.
11. Lightly secure the rotor with a vise to prevent damage, and remove the bearing (7) with a puller.

(When reassembling)

Tightening torque	Pulley nut	58.4 to 78.9 N·m 5.95 to 8.05 kgf·m 43.1 to 58.2 lbf·ft

9Y1210784ENS0054US0

(8) Starter

Electromagnetic Drive Type

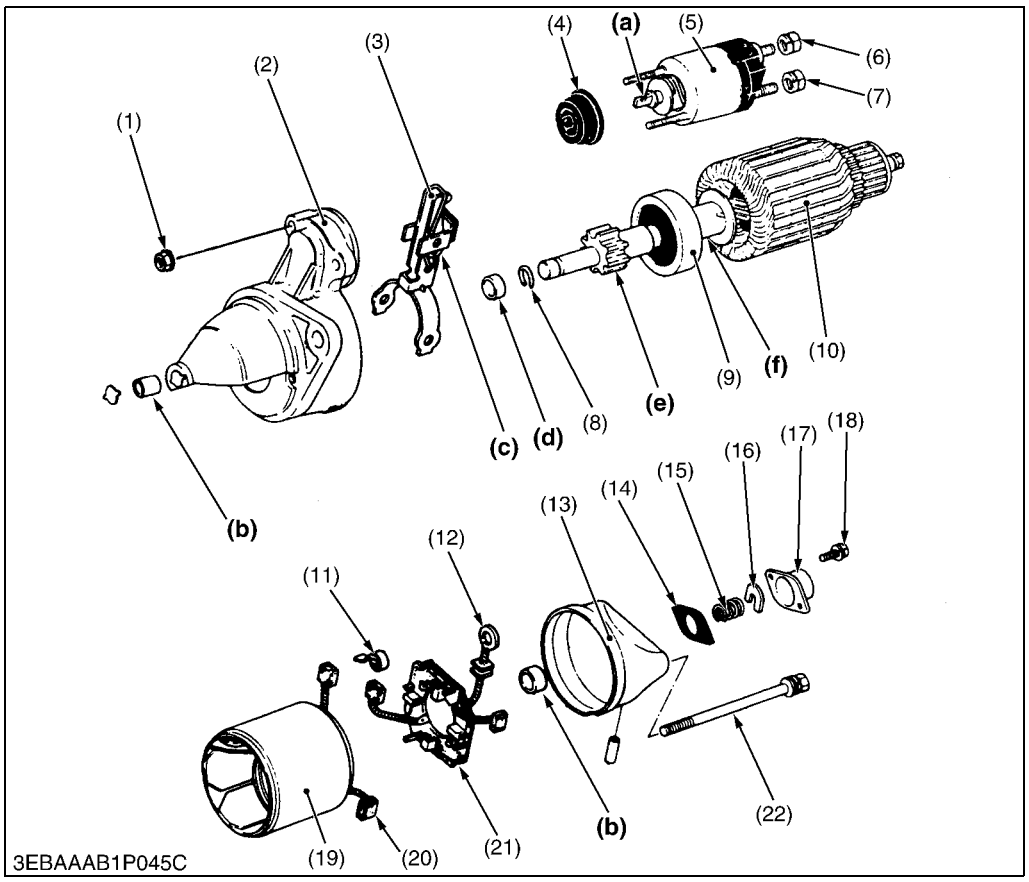

(1) Solenoid Switch Mounting Nut
(2) Starter Drive Housing
(3) Drive Lever
(4) Gasket
(5) Solenoid Switch
(6) **B** Terminal Nut
(7) **C** Terminal Nut
(8) Snap RIng
(9) Overrunning Clutch
(10) Armature
(11) Brush Spring
(12) Connecting Lead
(13) Rear End Frame
(14) Gasket
(15) Brake Spring
(16) Brake Shoe
(17) End Frame Cap
(18) Screw
(19) Yoke
(20) Brush
(21) Brush Holder
(22) Through Bolt

1. Unscrew the **C** terminal nut (7), and disconnect the connecting lead (12).
2. Unscrew the solenoid switch mounting nuts (1), and remove the solenoid switch (5).
3. Remove the end frame cap (17).
4. Remove the brake shoe (16), brake spring (15) and gasket (14).
5. Unscrew the through bolts (22), and remove the rear end frame (13).
6. Remove the brush from the brush holder while holding the spring up.
7. Remove the brush holder (21).
8. Draw out the yoke (19) from the starter drive housing (2).
9. Draw out the armature (10) with the drive lever (3).

■ **NOTE**

- **Do not damage to the brush and commutator.**

(When reassembling)

- Apply grease (DENSO.CO.LTD. No. 50 or equivalent) to the parts indicated in the figure.
  - Joint of solenoid switch **(a)**
  - Bushing **(b)**
  - Drive lever **(c)**
  - Collar **(d)**
  - Teeth of pinion gear **(e)**
  - Armature shaft **(f)**

Tightening torque	**B** terminal nut	5.88 to 11.8 N·m 0.600 to 1.20 kgf·m 4.34 to 8.70 lbf·ft

9Y1210784ENS0055US0

Gear Reduction Type

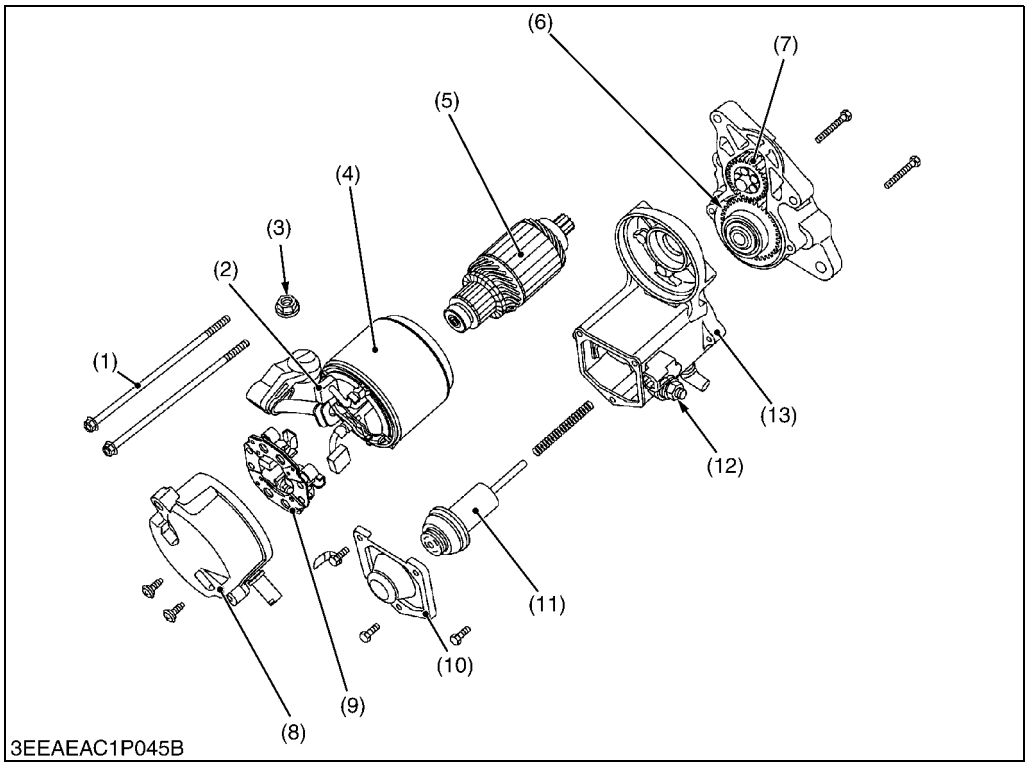

(1) Through Bolt
(2) Brush
(3) **C** Terminal Nut
(4) Yoke
(5) Armature
(6) Overrunning Clutch
(7) Idle Gear
(8) End Frame
(9) Brush Holder
(10) Magnet Switch Cover
(11) Plunger
(12) **B** Terminal Nut
(13) Housing

1. Unscrew the **C** terminal nut (3), and disconnect the connecting lead.
2. Remove the two through bolts (1).
3. Detach the motor.
4. Remove the end frame (8).
5. Remove the brush from the brush holder while holding the spring up.
6. Remove the brush holder (9).
7. Draw out the armature (5) from the yoke (4).
8. Remove the housing (13).
9. Remove the idle gear (7) and the overrunning clutch (6).
10. Remove the magnet switch cover (10).
11. Remove the plunger (11).

■ **NOTE**

- **Do not damage to the brush and commutator.**

(When reassembling)

- Apply grease (DENSO No. 50 or equivalent) to the idle gear and overrunning clutch portions.

Tightening torque	**B** terminal nut	5.88 to 11.8 N·m 0.600 to 1.20 kgf·m 4.34 to 8.70 lbf·ft

9Y1210784ENS0056US0

[3] SERVICING
(1) Cylinder Head and Valves

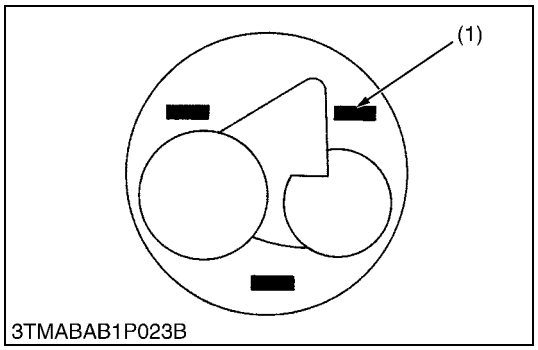

3TMABAB1P023B

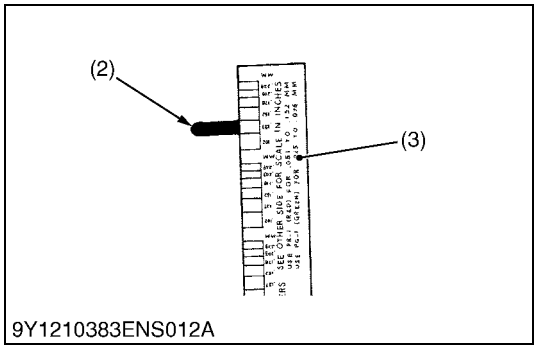

9Y1210383ENS012A

Top Clearance

1. Remove the cylinder head.
2. With the piston at TDC, use grease to affix three or four plastigauges (1) of a diameter 1.5 mm (0.059 in.) × 5.0 to 7.0 mm (0.20 to 0.27 in.) long to the crown of the piston; keep the gauges away from the intake valve and combustion chamber fittings.
3. Take the piston to an intermediate position, install the cylinder head and tighten the head bolts to the specified torque.
4. Turn the crankshaft so the piston goes through TDC.
5. Remove the cylinder head and compare the width of the crushed plastigauges (2) with the scale.
6. If they are out of spec, check the oil clearance of the crank pin, journals and piston pins.

■ **NOTE**
- **Top clearance = Width of the crushed plastigauge (2).**

Top clearance	Factory specification	D1005-E4B/ E4BG D1105-E4B/ E4BG V1505-E4B/ E4BG	0.55 to 0.75 mm 0.022 to 0.029 in.
		D1305-E4B/ E4BG	0.80 to 1.0 mm 0.032 to 0.039 in.

Tightening torque	Cylinder head screw	64 to 68 N·m 6.5 to 7.0 kgf·m 47 to 50 lbf·ft

(1) Plastigauge
(2) Crushed Plastigauge
(3) Scale

9Y1210784ENS0057US0

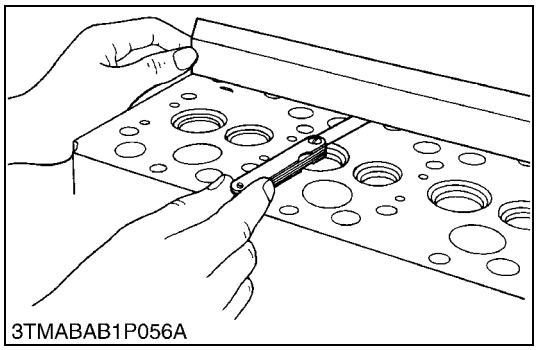
3TMABAB1P056A

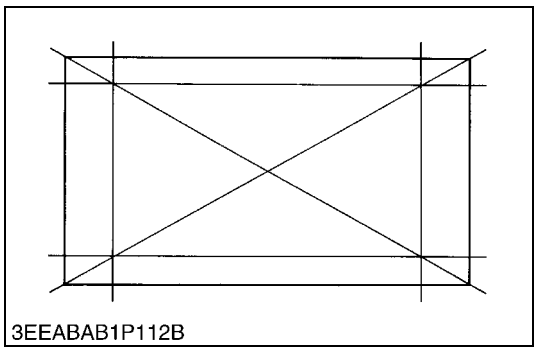
3EEABAB1P112B

Cylinder Head Surface Flatness

1. Clean the cylinder head surface.
2. Place a straightedge on the cylinder head's four sides and two diagonal as shown in the figure.
3. Measure the clearance with a thickness gauge.
4. If the measurement exceeds the allowable limit, correct it with a surface grinder.

■ **IMPORTANT**
- **Do not place the straightedge on the combustion chamber.**
- **Be sure to check the valve recessing after correcting.**

Cylinder head surface flatness	Allowable limit	0.05 mm 0.002 in.

9Y1210784ENS0058US0

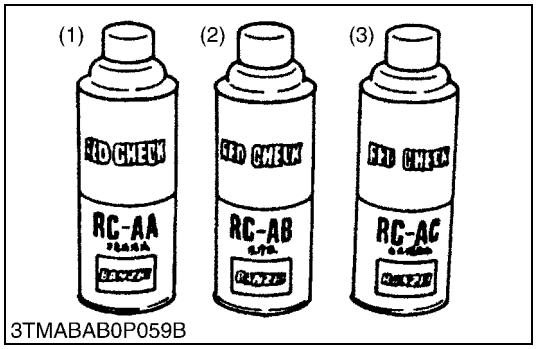

3TMABAB0P059B

Cylinder Head Flaw

1. Prepare an air spray red check.
2. Clean the surface of the cylinder head with detergent (2).
3. Spray the cylinder head surface with the red permeative liquid (1). Leave it five to ten minutes after spraying.
4. Wash away the read permeative liquid on the cylinder head surface with the detergent (2).
5. Spray the cylinder head surface with white developer (3).
6. If flawed, it can be identified as red marks.

(1) Red Permeative Liquid
(2) Detergent
(3) White Developer

9Y1210784ENS0059US0

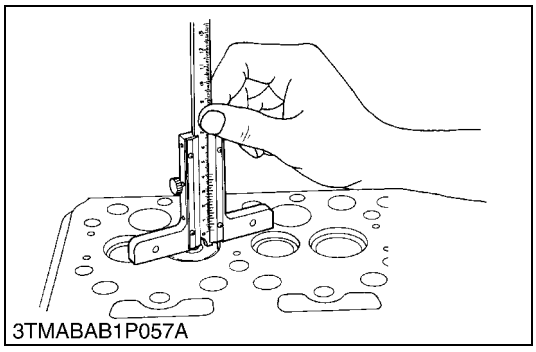
3TMABAB1P057A

Valve Recessing

1. Clean the cylinder head surface, valve face and valve seat.
2. Insert the valve into the valve guide.
3. Measure the valve recessing with a depth gauge.
4. If the measurement exceeds the allowable limit, replace the valve.
5. If it still exceeds the allowable limit after replacing the valve, replace the cylinder head.

Valve recessing	Factory specification	0.050 (protrusion) to 0.25 (recessing) mm 0.0020 (protrusion) to 0.0098 (recessing) in.
	Allowable limit	0.40 (recessing) mm 0.016 (recessing) in.

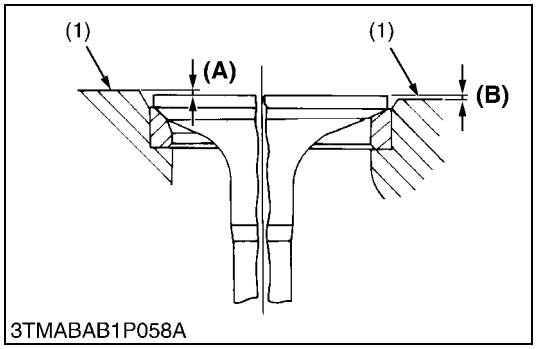

3TMABAB1P058A

(1) Cylinder Head Surface
(A) Recessing
(B) Protrusion

9Y1210784ENS0060US0

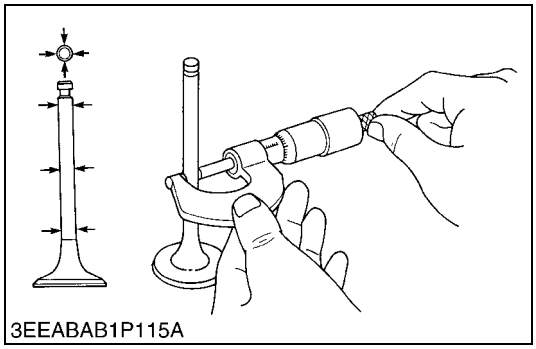
3EEABAB1P115A

Clearance between Valve Stem and Valve Guide

1. Remove carbon from the valve guide section.
2. Measure the valve stem O.D. with an outside micrometer.
3. Measure the valve guide I.D. with a small hole gauge, and calculate the clearance.
4. If the clearance exceeds the allowable limit, replace the valves. If it still exceeds the allowable limit, replace the valve guide.

Clearance between valve stem and valve guide	Factory specification	0.035 to 0.065 mm 0.0014 to 0.0025 in.
	Allowable limit	0.10 mm 0.0039 in.

Valve stem O.D.	Factory specification	6.960 to 6.975 mm 0.2741 to 0.2746 in.
Valve guide I.D.	Factory specification	7.010 to 7.025 mm 0.2760 to 0.2765 in.

9Y1210784ENS0061US0

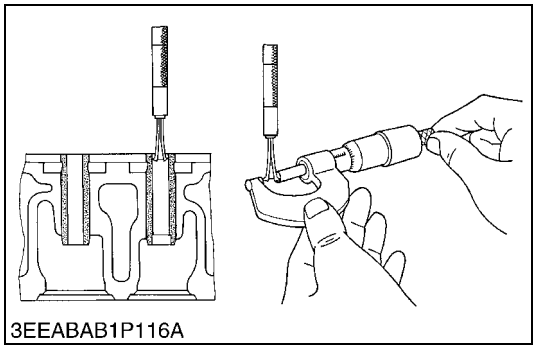
3EEABAB1P116A

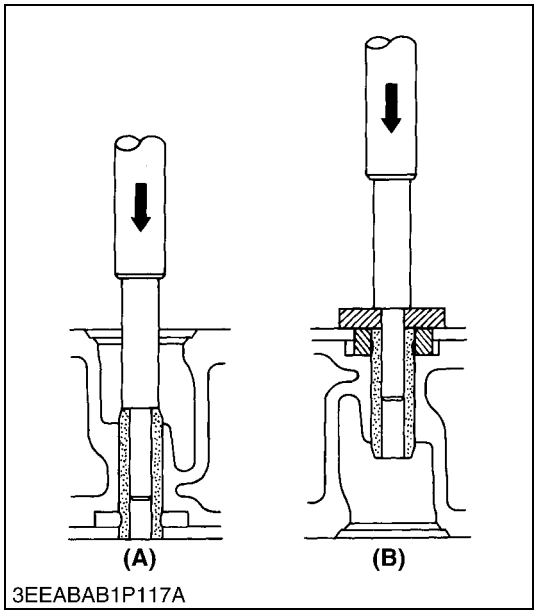

3EEABAB1P117A

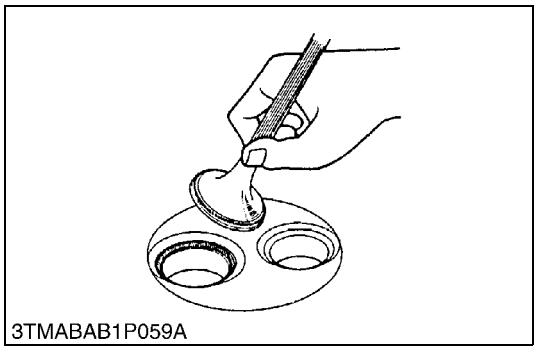
3TMABAB1P059A

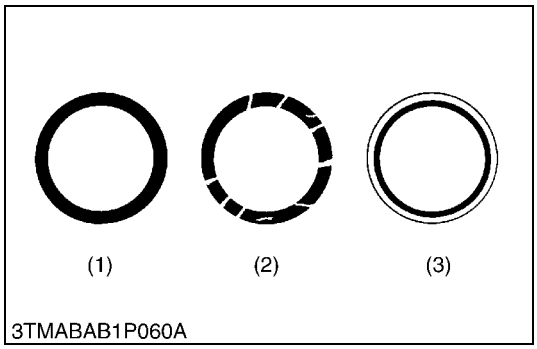

3TMABAB1P060A

Replacing Valve Guide

(When removing)

1. Press out the used valve guide using a valve guide replacing tool. (See page "SPECIAL TOOLS".)

(When installing)

1. Clean a new valve guide and valve guide bore, and apply engine oil to them.
2. Press fit a new valve guide using a valve guide replacing tool.
3. Ream precisely the I.D. of the valve guide to the specified dimension.

Valve guide I.D. (Intake and exhaust)	Factory specification	7.010 to 7.025 mm 0.2760 to 0.2765 in.

■ **NOTE**

- **Do not hit the valve guide with a hammer during replacement.**

(A) When Removing **(B) When Installing**

9Y1210784ENS0062US0

Valve Seating

1. Coat the valve face lightly with prussian blue and put the valve on its seat to check the contact.
2. If the valve does not seat all the way around the valve seat or the valve contact is less than 70 %, correct the valve seating as follows.
3. If the valve contact does not comply with the reference value, replace the valve or correct the contact of valve seating.

Valve seat width	Factory specification	2.12 mm 0.0835 in.

(1) Correct
(2) Incorrect
(3) Incorrect

9Y1210784ENS0063US0

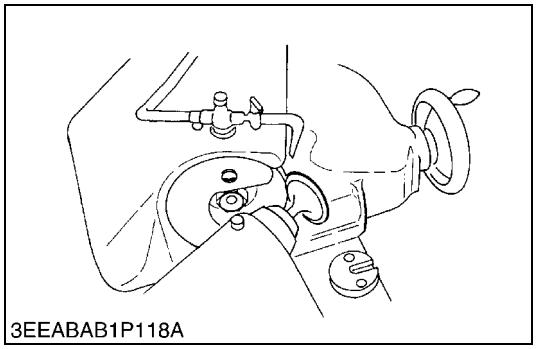
3EEABAB1P118A

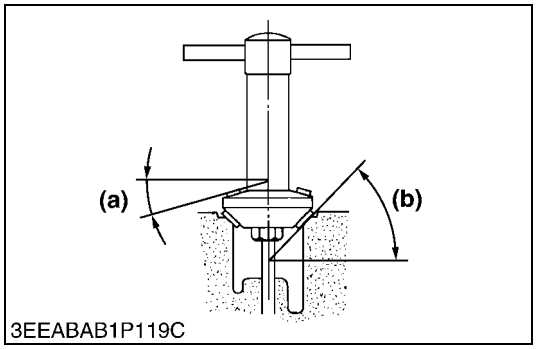

3EEABAB1P119C

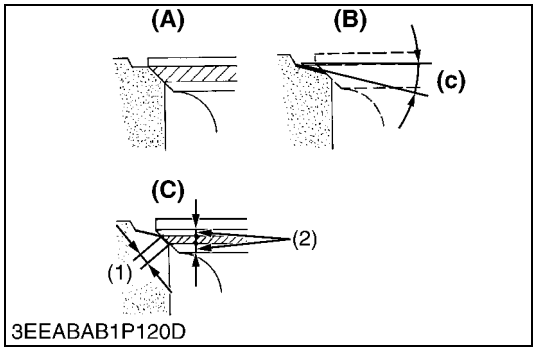

3EEABAB1P120D

Correcting Valve and Valve Seat

■ **NOTE**
- **Before correcting the valve and seat, check the valve stem and the I.D. of valve guide section, and repair them if necessary.**
- **After correcting the valve seat, be sure to check the valve recessing.**

(1) Correcting Valve

1. Correct the valve with a valve refacer.

Valve face angle	Factory specification	IN.	1.0 rad 60 °
		EX.	0.79 rad 45 °

(2) Correcting Valve Seat

1. Slightly correct the seat surface with a 1.0 rad (60 °) (intake valve) or 0.79 rad (45 °) (exhaust valve) valve seat cutter.
2. Resurface the seat surface with a 0.52 rad (30 °) valve seat cutter to intake valve seat and with a 0.26 rad (15 °) valve seat cutter to exhaust valve seat so that the width is close to specified valve seat width (2.12 mm, 0.0835 in.)
3. After resurfacing the seat, inspect for even valve seating, apply a thin film of compound between the valve face and valve seat, and fit them with valve lapping tool.
4. Check the valve seating with prussian blue. The valve seating surface should show good contact all the way around.

Valve seat angle	Factory specification	IN.	1.0 rad 60 °
		EX.	0.79 rad 45 °

(1) Valve Seat Width
(2) Identical Dimensions

(A) Check Contact
(B) Correct Seat Width
(C) Check Contact
(a) 0.26 rad (15 °) or 0.52 rad (30 °)
(b) 0.79 rad (45 °) or 1.0 rad (60 °)
(c) 0.52 rad (30 °) or 0.26 rad (15 °)

9Y1210784ENS0064US0

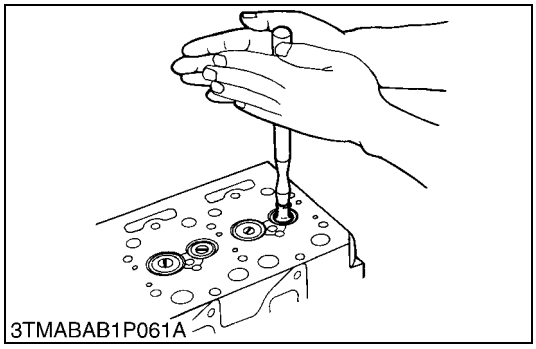
3TMABAB1P061A

Valve Lapping

1. Apply compound evenly to the valve lapping surface.
2. Insert the valve into the valve guide. Lap the valve onto its seat with a valve flapper or screwdriver.
3. After lapping the valve, wash the compound away and apply oil, then repeat valve lapping with oil.
4. Apply prussian blue to the contact surface to check the seated rate. If it is less than 70 %, repeat valve lapping again.

■ **IMPORTANT**
- **When valve lapping is performed, be sure to check the valve recessing and adjust the valve clearance after assembling the valve.**

9Y1210784ENS0065US0

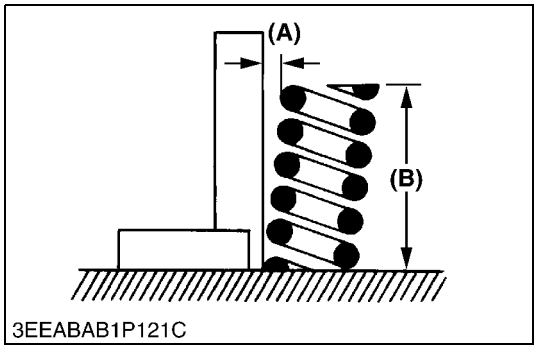

3EEABAB1P121C

Free Length and Tilt of Valve Spring

1. Measure the free length **(B)** of valve spring with vernier calipers. If the measurement is less than the allowable limit, replace it.
2. Put the valve spring on a surface plate, place a square on the side of the valve spring.
3. Check to see if the entire side is in contact with the square. Rotate the valve spring and measure the maximum tilt **(A)**. If the measurement exceeds the allowable limit, replace it.
4. Check the entire surface of the valve spring for scratches. If there is any problem, replace it.

Tilt **(A)**	Allowable limit	1.0 mm 0.039 in.

Free length **(B)**	Factory specification	37.0 to 37.5 mm 1.46 to 1.47 in.
	Allowable limit	36.5 mm 1.44 in.

(A) Tilt **(B) Free Length**

9Y1210784ENS0066US0

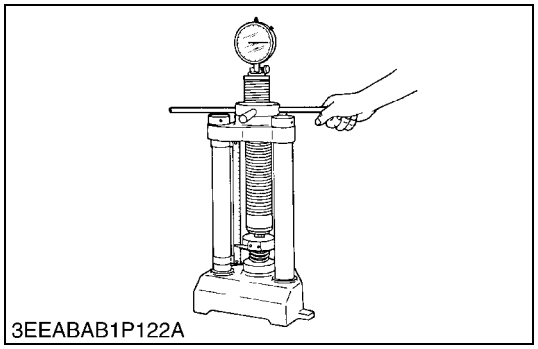
3EEABAB1P122A

Valve Spring Setting Load

1. Place the valve spring on a tester and compress it to the same length it is actually compressed in the engine.
2. Read the compression load on the gauge.
3. If the measurement is less than the allowable limit, replace it.

Setting load / Setting length	Factory specification	117.4 N / 31.0 mm 11.97 kgf / 31.0 mm 26.39 lbf / 1.22 in.
	Allowable limit	100.0 N / 31.0 mm 10.20 kgf / 31.0 mm 22.48 lbf / 1.22 in.

9Y1210784ENS0067US0


3TAAAAD1P060A

Oil Clearance between Rocker Arm and Rocker Arm Shaft

1. Measure the rocker arm shaft O.D. with an outside micrometer.
2. Measure the rocker arm I.D. with an inside micrometer, and then calculate the oil clearance.
3. If the oil clearance exceeds the allowable limit, replace the rocker arm and measure the oil clearance again. If it still exceeds the allowable limit, replace also the rocker arm shaft.

Oil clearance between rocker arm and rocker arm shaft	Factory specification	0.016 to 0.045 mm 0.00063 to 0.0017 in.
	Allowable limit	0.10 mm 0.0039 in.

Rocker arm shaft O.D.	Factory specification	11.973 to 11.984 mm 0.47138 to 0.47181 in.
Rocker arm I.D.	Factory specification	12.000 to 12.018 mm 0.47244 to 0.47314 in.

9Y1210784ENS0068US0

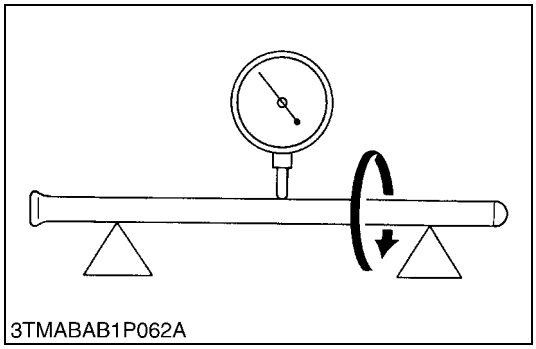
3TMABAB1P062A

Push Rod Alignment

1. Place the push rod on V blocks.
2. Measure the push rod alignment.
3. If the measurement exceeds the allowable limit, replace the push rod.

Push rod alignment	Allowable limit	0.25 mm 0.0098 in.

9Y1210784ENS0069US0

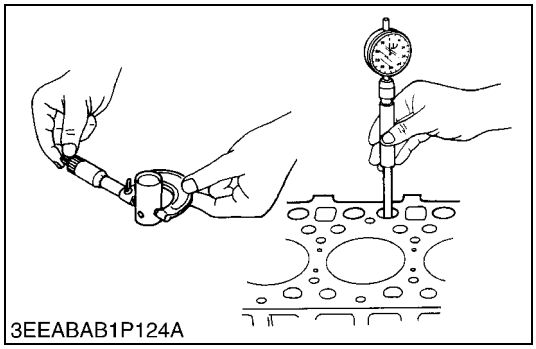
3EEABAB1P124A

Oil Clearance between Tappet and Tappet Guide Bore

1. Measure the tappet O.D. with an outside micrometer.
2. Measure the I.D. of the tappet guide bore with a cylinder gauge, and calculate the oil clearance.
3. If the oil clearance exceeds the allowable limit or the tappet is damaged, replace the tappet.

Oil Clearance between tappet and tappet guide bore	Factory specification	0.020 to 0.062 mm 0.00079 to 0.0024 in.
	Allowable limit	0.07 mm 0.003 in.

Tappet O.D.	Factory specification	19.959 to 19.980 mm 0.78579 to 0.78661 in.
Tappet guide bore I.D.	Factory specification	20.000 to 20.021 mm 0.78740 to 0.78822 in.

9Y1210784ENS0070US0

(2) Timing Gears, Camshaft and Governor Gear

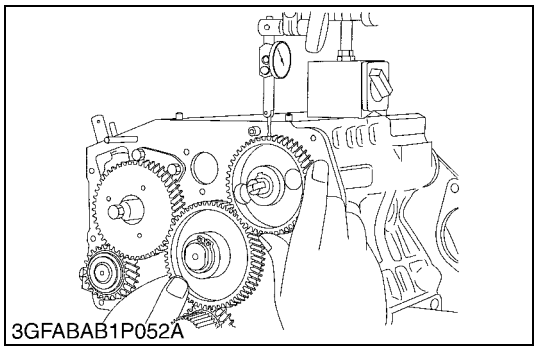
3GFABAB1P052A

Timing Gear Backlash

1. Set a dial indicator (lever type) with its tip on the gear tooth.
2. Move the gear to measure the backlash, holding its mating gear.
3. If the backlash exceeds the allowable limit, check the oil clearance of the shafts and the gear.
4. If the oil clearance is proper, replace the gear.

Backlash between idle gear 1 and crank gear	Factory specification	0.0320 to 0.115 mm 0.00126 to 0.00452 in.
	Allowable limit	0.15 mm 0.0059 in.

Backlash between idle gear 1 and cam gear	Factory specification	0.0360 to 0.114 mm 0.00142 to 0.00448 in.
	Allowable limit	0.15 mm 0.0059 in.

Backlash between idle gear 1 and injection pump gear	Factory specification	0.0340 to 0.116 mm 0.00134 to 0.00456 in.
	Allowable limit	0.15 mm 0.0059 in.

(equipped with idle gear 2) Backlash between idle gear 1 and idle gear 2	Factory specification	0.0330 to 0.117 mm 0.00130 to 0.00460 in.
	Allowable limit	0.15 mm 0.0059 in.

9Y1210784ENS0071US0

Governor Gear Backlash

Backlash between injection pump gear and governor gear	Factory specification	0.0300 to 0.117 mm 0.00119 to 0.00460 in.
	Allowable limit	0.15 mm 0.0059 in.

(equipped with idle gear 2) idle gear 2 and governor gear	Factory specification	0.030 to 0.117 mm 0.0012 to 0.00460 in.
	Allowable limit	0.15 mm 0.0059 in.

9Y1210784ENS0072US0

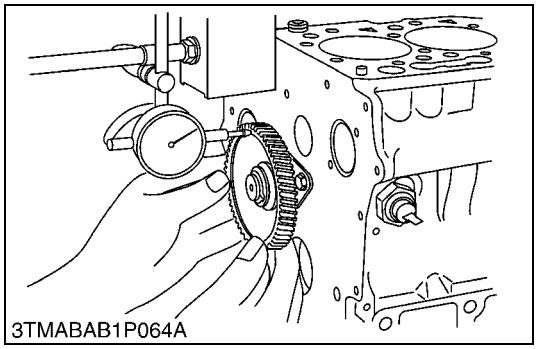
3TMABAB1P064A

Idle Gear 1 and 2 Side Clearance

1. Set a dial indicator with its tip on the idle gear.
2. Measure the side clearance by moving the idle gear to the front and rear.
3. If the measurement exceeds the allowable limit, replace the idle gear collar

Idle gear 1 and 2 side clearance	Factory specification	0.20 to 0.51 mm 0.0079 to 0.020 in.
	Allowable limit	0.80 mm 0.031 in.

9Y1210784ENS0073US0

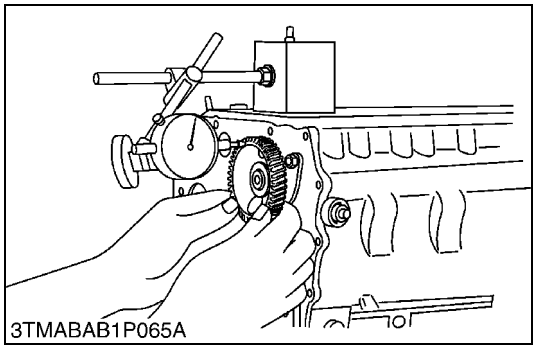
3TMABAB1P065A

Camshaft Side Clearance

1. Set a dial indicator with its tip on the camshaft.
2. Measure the side clearance by moving the cam gear to the front to rear.
3. If the measurement exceeds the allowable limit, replace the camshaft stopper

Camshaft side clearance	Factory specification	0.070 to 0.22 mm 0.0028 to 0.0086 in.
	Allowable limit	0.30 mm 0.012 in.

9Y1210784ENS0074US0

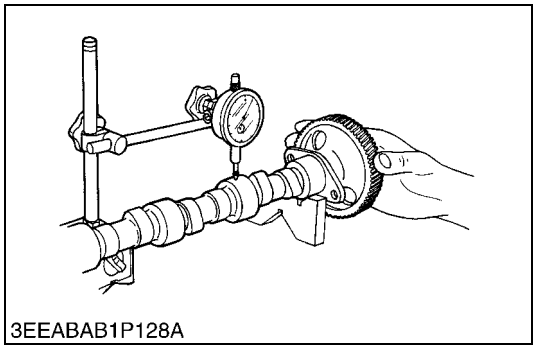
3EEABAB1P128A

Camshaft Alignment

1. Support the camshaft with V blocks on the surface plate at both end journals.
2. Set a dial indicator with its tip on the intermediate journal.
3. Measure the camshaft alignment.
4. If the measurement exceeds the allowable limit, replace the camshaft.

Camshaft alignment	Allowable limit	0.01 mm 0.0004 in.

9Y1210784ENS0075US0

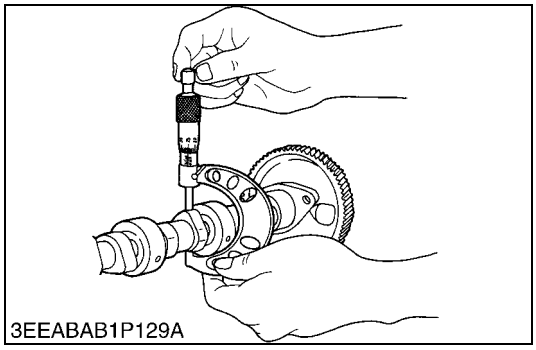
3EEABAB1P129A

Cam Height

1. Measure the height of the cam at its highest point with an outside micrometer.
2. If the measurement is less than the allowable limit, replace the camshaft.

Cam height of intake	Factory specification	28.80 mm 1.134 in.
	Allowable limit	28.75 mm 1.132 in.

Cam height of exhaust	Factory specification	29.00 mm 1.142 in.
	Allowable limit	28.95 mm 1.140 in.

9Y1210784ENS0076US0

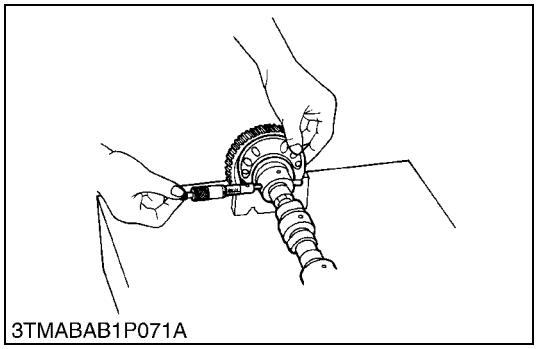
3TMABAB1P071A

Oil Clearance of Camshaft Journal

1. Measure the camshaft journal O.D. with an outside micrometer.
2. Measure the cylinder block bore I.D. for camshaft with a cylinder gauge, and calculate the oil clearance.
3. If the oil clearance exceeds the allowable limit, replace the camshaft.

Oil clearance of camshaft journal	Factory specification	0.050 to 0.091 mm 0.0020 to 0.0035 in.
	Allowable limit	0.15 mm 0.0059 in.

Camshaft journal O.D.	Factory specification	35.934 to 35.950 mm 1.4147 to 1.4153 in.
Camshaft bearing I.D. (Cylinder block bore I.D.)	Factory specification	36.000 to 36.025 mm 1.4173 to 1.4183 in.

9Y1210784ENS0077US0

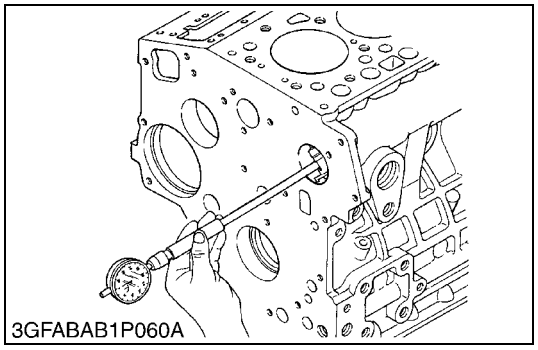
3GFABAB1P060A

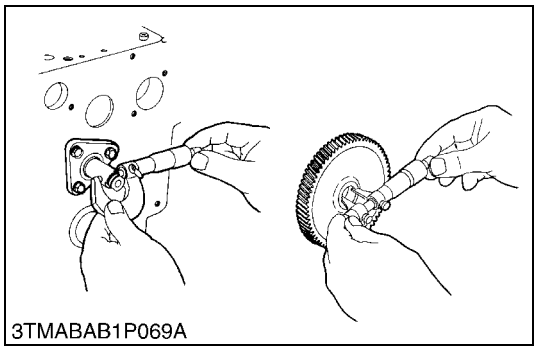
3TMABAB1P069A

Oil Clearance between Idle Gear Shaft 1 and 2 and Idle Gear Bushing

1. Measure the idle gear shaft O.D. with an outside micrometer.
2. Measure the idle gear bushing I.D. with an inside micrometer, and calculate the oil clearance.
3. If the oil clearance exceeds the allowable limit, replace the bushing.
   If it still exceeds the allowable limit, replace the idle gear shaft.

Oil clearance between idle gear shaft (1 and 2) and idle gear bushing	Factory specification	0.020 to 0.054 mm 0.00079 to 0.0021 in.
	Allowable limit	0.10 mm 0.0039 in.

Idle gear shaft 1 and 2 O.D.	Factory specification	25.967 to 25.980 mm 1.0223 to 1.0228 in.
Idle gear bushing 1 and 2 I.D.	Factory specification	26.000 to 26.021 mm 1.0237 to 1.0244 in.

9Y1210784ENS0078US0

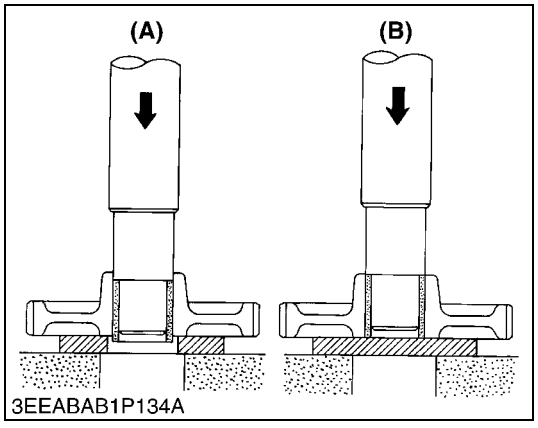

3EEABAB1P134A

Replacing Idle Gear Bushing

(When removing)

1. Press out the used idle gear bushing using an idle gear bushing replacing tool. (See page "SPECIAL TOOLS".)

(When installing)

1. Clean a new idle gear bushing and idle gear bore, and apply engine oil to them.
2. Press fit a new bushing using an idle gear bushing replacing tool, until it is flush with the end of the idle gear.

(A) When Removing **(B) When Installing**

9Y1210784ENS0079US0

(3) Piston and Connecting Rod

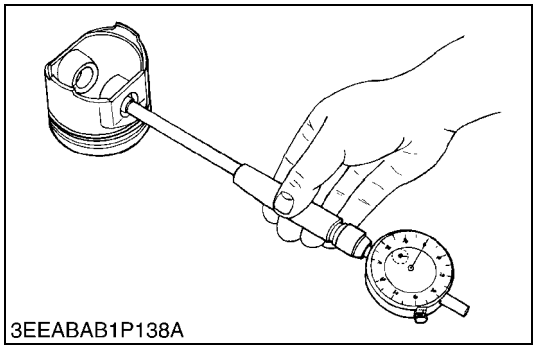
3EEABAB1P138A

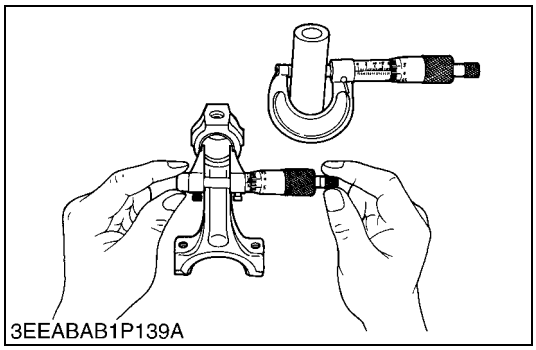
3EEABAB1P139A

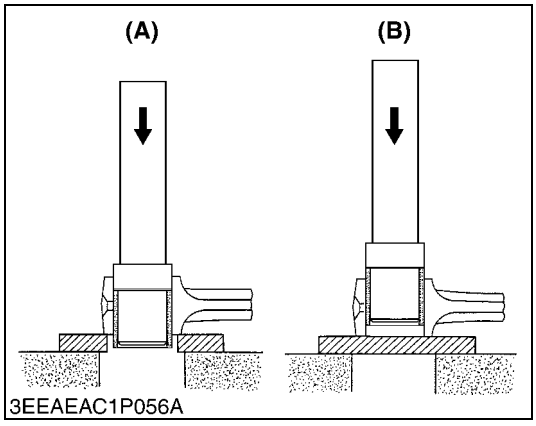

3EEAEAC1P056A

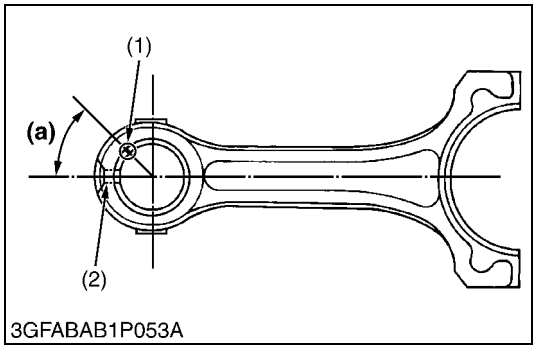

3GFABAB1P053A

Piston Pin Bore I.D.

1. Measure the piston pin bore I.D. in both the horizontal and vertical directions with a cylinder gauge.
2. If the measurement exceeds the allowable limit, replace the piston.

Piston pin bore I.D.	Factory specification	22.000 to 22.013 mm 0.86615 to 0.86665 in.
	Allowable limit	22.03 mm 0.8673 in.

9Y1210784ENS0080US0

Oil Clearance between Piston Pin and Small End Bushing

1. Measure the piston pin O.D. where it contacts the bushing with an outside micrometer.
2. Measure the small end bushing I.D. with an inside micrometer, and calculate the oil clearance.
3. If the oil clearance exceeds the allowable limit, replace the bushing. If it still exceeds the allowable limit, replace the piston pin.

Oil clearance between piston pin and small end bushing	Factory specification	0.014 to 0.038 mm 0.00055 to 0.0014 in.
	Allowable limit	0.15 mm 0.0059 in.

Piston pin O.D.	Factory specification	22.002 to 22.011 mm 0.86622 to 0.86657 in.
Small end bushing I.D.	Factory specification	22.025 to 22.040 mm 0.86713 to 0.86771 in.

9Y1210784ENS0081US0

Replacing Small End Bushing

(When removing)

1. Press out the used bushing using a small end bushing replacing tool. (See page "SPECIAL TOOLS".)

(When installing)

1. Clean a new small end bushing and bore, and apply engine oil to them.
2. Using a small end bushing replacing tool, press fit a new bushing (service parts) taking due care to see that the connecting rod oil hole matches the bushing hole.

Oil clearance between piston pin and small end bushing (Spare parts)	Factory specification	0.014 to 0.038 mm 0.00056 to 0.0014 in.
	Allowable limit	0.15 mm 0.0059 in.

Small end bushing I.D. (Spare parts)	Factory specification	22.025 to 22.040 mm 0.86713 to 0.86771 in.

(1) Seam
(2) Oil Hole

(A) When Removing
(B) When Installing
(a) 0.79 rad (45 °)

9Y1210784ENS0082US0

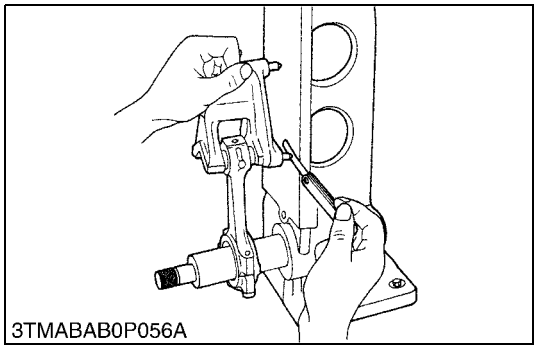
3TMABAB0P056A

Connecting Rod Alignment

■ **NOTE**
- **Since the I.D. of the connecting rod small end bushing is the basis of this check, check bushing for wear beforehand.**

1. Install the piston pin into the connecting rod.
2. Install the connecting rod on the connecting rod alignment tool.
3. Put a gauge over the piston pin, and move it against the face plate.
4. If the gauge does not fit squarely against the face plate, measure the space between the pin of the gauge and the face plate.
5. If the measurement exceeds the allowable limit, replace the connecting rod.

Connecting rod alignment	Allowable limit	0.05 mm 0.002 in.

9Y1210784ENS0083US0

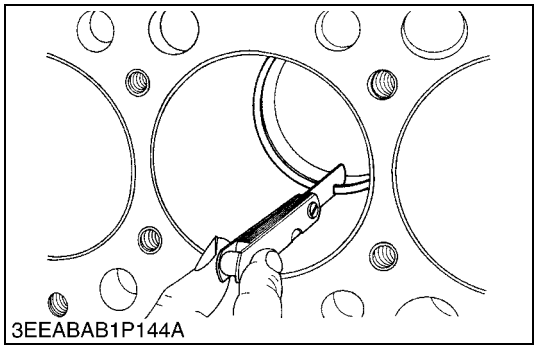
3EEABAB1P144A

Piston Ring Gap

1. Insert the piston ring into the lower part of the cylinder (the least worn out part) with a piston.
2. Measure the ring gap with a thickness gauge.
3. If the measurement exceeds the allowable limit, replace the piston ring.

Piston ring gap **[D1005-E4B/E4BG]**	Top ring	Factory specification	0.30 to 0.45 mm 0.012 to 0.017 in.
		Allowable limit	1.25 mm 0.0492 in.
	Second ring	Factory specification	0.30 to 0.45 mm 0.012 to 0.017 in.
		Allowable limit	1.25 mm 0.0492 in.
	Oil ring	Factory specification	0.25 to 0.45 mm 0.0099 to 0.017 in.
		Allowable limit	1.25 mm 0.0492 in.
Piston ring gap **[D1105-E4B/E4BG]** **[D1305-E4B/E4BG]** **[V1505-E4B/E4BG]**	Top ring	Factory specification	0.15 to 0.25 mm 0.0059 to 0.0098 in.
		Allowable limit	1.20 mm 0.0472 in.
	Second ring	Factory specification	0.40 to 0.55 mm 0.016 to 0.021 in.
		Allowable limit	1.20 mm 0.0472 in.
	Oil ring	Factory specification	0.25 to 0.45 mm 0.0099 to 0.017 in.
		Allowable limit	1.25 mm 0.0492 in.

9Y1210784ENS0084US0

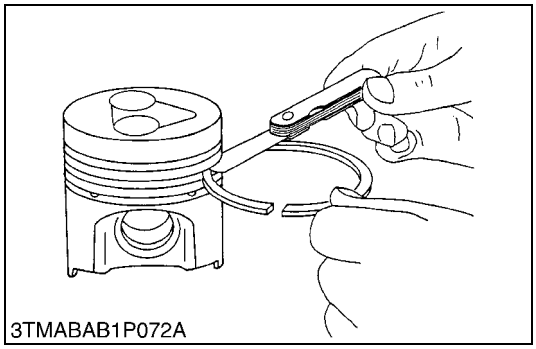
3TMABAB1P072A

Clearance between Piston ring and Piston Ring Groove

1. Clean the rings and the ring grooves, and install each ring in its groove.
2. Measure the clearance between the ring and the groove with a feeler gauge or depth gauge.
3. If the clearance exceeds the allowable limit, replace the piston ring.
4. If the clearance still exceeds the allowable limit with new ring, replace the piston.

Clearance between piston ring and piston ring groove **[D1005-E4B/E4BG]**	Second ring	Factory specification	0.0850 to 0.112 mm 0.00335 to 0.00440 in.
		Allowable limit	0.2 mm 0.008 in.
	Oil ring	Factory specification	0.02 to 0.06 mm 0.0008 to 0.002 in.
		Allowable limit	0.15 mm 0.0059 in.
Clearance between piston ring and piston ring groove **[D1105-E4B/E4BG]** **[D1305-E4B/E4BG]** **[V1505-E4B/E4BG]**	Second ring	Factory specification	0.0850 to 0.122 mm 0.00335 to 0.00480 in.
		Allowable limit	0.2 mm 0.008 in.
	Oil ring	Factory specification	0.02 to 0.06 mm 0.0008 to 0.002 in.
		Allowable limit	0.15 mm 0.0059 in.

9Y1210784ENS0085US0

(4) Crankshaft

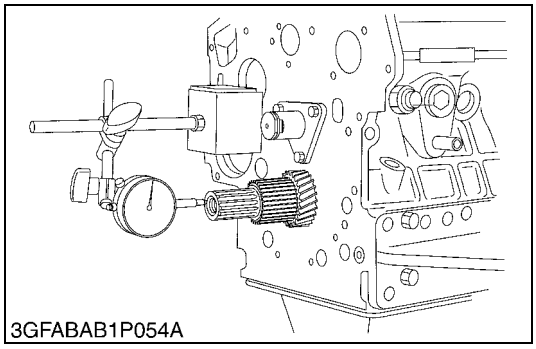
3GFABAB1P054A

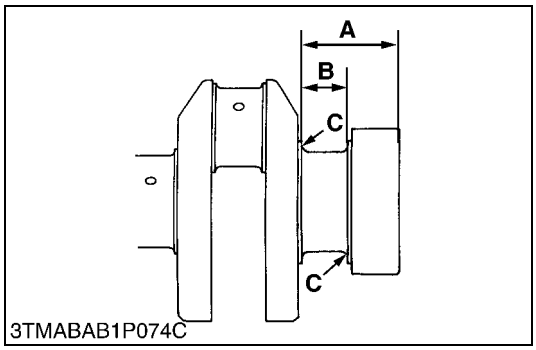

3TMABAB1P074C

Crankshaft Side Clearance

1. Set a dial indicator with its point on the end of the crankshaft.
2. Move the crankshaft to the front and rear to measure the side clearance.
3. If the measurement is more than the allowable limit, replace the thrust bearings.
4. If the same size bearing is useless because of the crankshaft journal wear, replace it with an oversize one referring to the table and figure.

Crankshaft side clearance	Factory specification	0.15 to 0.31 mm 0.0059 to 0.012 in.
	Allowable limit	0.50 mm 0.020 in.

(Reference)

- Oversize dimensions of crankshaft journal

Oversize	0.2 mm 0.0079 in.	0.4 mm 0.016 in.
Dimension **A**	51.50 to 51.70 mm 2.028 to 2.035 in.	51.60 to 51.80 mm 2.032 to 2.039 in.
Dimension **B**	28.20 to 28.25 mm 1.111 to 1.112 in.	28.40 to 28.45 mm 1.119 to 1.120 in.
Dimension **C**	2.3 to 2.7 mm radius 0.091 to 0.10 in. radius	2.3 to 2.7 mm radius 0.091 to 0.10 in. radius
The crankshaft journal must be fine-finished to higher than Rmax = 0.8S		

9Y1210784ENS0086US0

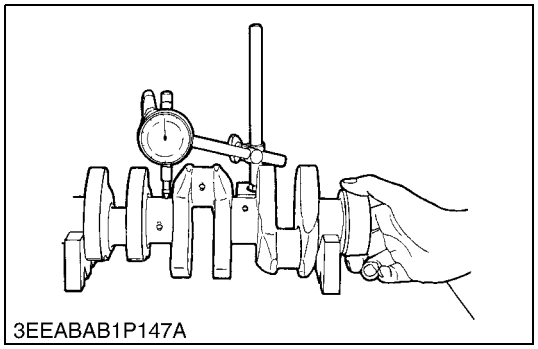
3EEABAB1P147A

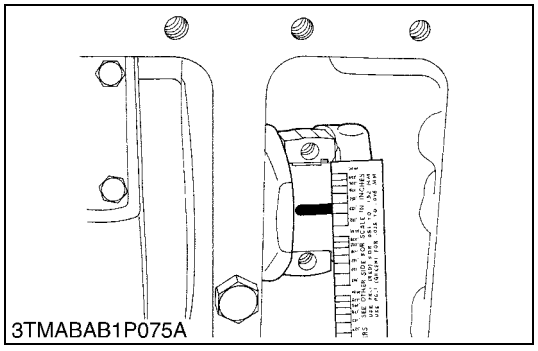
3TMABAB1P075A

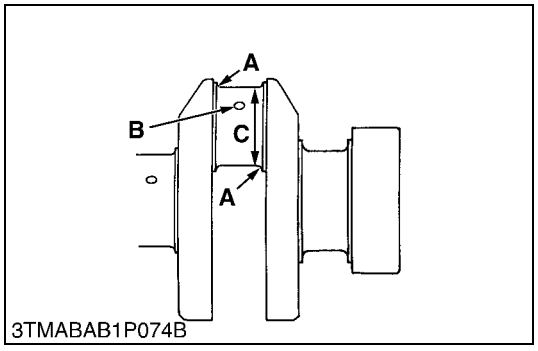

3TMABAB1P074B

Crankshaft Alignment

1. Support the crankshaft with V blocks on the surface plate at both end journals.
2. Set a dial indicator with its tip on the intermediate journal.
3. Measure the crankshaft alignment.
4. If the measurement exceeds the allowable limit, replace the crankshaft.

Crankshaft alignment	Allowable limit	0.02 mm 0.0008 in.

9Y1210784ENS0087US0

Oil Clearance between Crankpin and Crankpin Bearing

1. Clean the crankpin and crankpin bearing.
2. Put a strip of plastigage on the center of the crankpin.
3. Install the connecting rod cap and tighten the connecting rod screws to the specified torque, and remove the cap again.
4. Measure the amount of the flattening with the scale, and get the oil clearance.
5. If the oil clearance exceeds the allowable limit, replace the crankpin bearing.
6. If the same size bearing is useless because of the crankpin wear, replace it with an undersize one referring to the table and figure.

■ **NOTE**

- **Never insert the plastigage into the crankpin oil hole.**
- **Be sure not to move the crankshaft while the connecting rod screws are tightened.**

Oil clearance between crankpin and crankpin bearing	Factory specification	0.029 to 0.091 mm 0.0011 to 0.0036 in.
	Allowable limit	0.20 mm 0.0079 in.

Crank pin O.D.	Factory specification	39.959 to 39.975 mm 1.5732 to 1.5738 in.
Crank pin bearing I.D.	Factory specification	40.040 to 40.050 mm 1.5764 to 1.5767 in.

(Reference)

- Undersize dimensions of crank pin

Undersize	**0.20 mm 0.0079 in.**	**0.40 mm 0.016 in.**
Dimension **A**	2.8 to 3.2 mm radius 0.11 to 0.12 in. radius	2.8 to 3.2 mm radius 0.11 to 0.12 in. radius
*Dimension **B**	1.0 to 1.5 mm relief 0.040 to 0.059 in. relief	1.0 to 1.5 mm relief 0.040 to 0.059 in. relief
Dimension **C**	39.759 to 39.775 mm dia. 1.5654 to 1.5659 in. dia.	39.559 to 39.575 mm dia. 1.5575 to 1.5580 in. dia.
The crank pin must be fine-finished to higher than Rmax = 0.8S *Holes to be de-burred and edges rounded with 1.0 to 1.5 mm (0.040 to 0.059 in.) relief.		

9Y1210784ENS0088US0

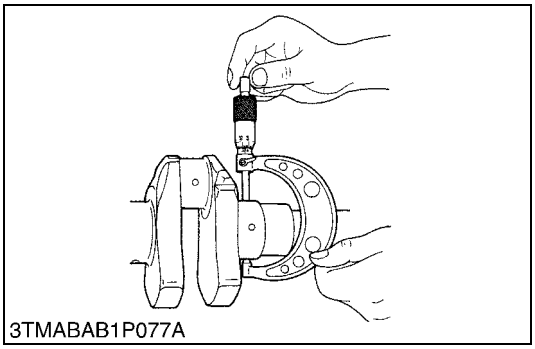
3TMABAB1P077A

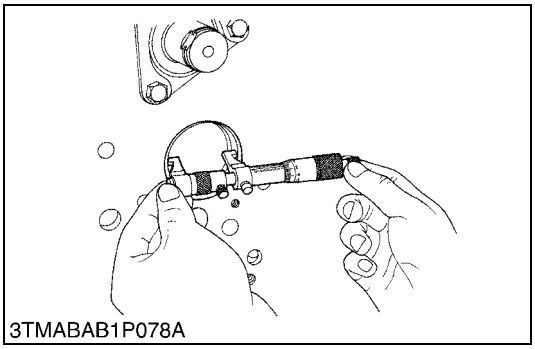
3TMABAB1P078A

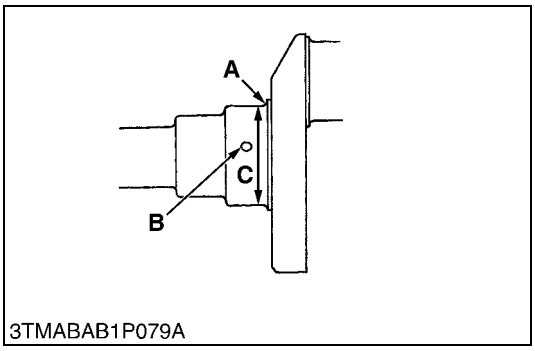

3TMABAB1P079A

Oil Clearance between Crankshaft Journal and Crankshaft Bearing 1

1. Measure the O.D. of the crankshaft front journal with an outside micrometer.
2. Measure the I.D. of the crankshaft bearing 1 with an inside micrometer, and calculate the oil clearance.
3. If the clearance exceeds the allowable limit, replace the crankshaft bearing 1.
4. If the same size bearing is useless because of the crankshaft journal wear, replace it with an undersize one referring to the table and figure.

[D1005-E4B/E4BG, D1105-E4B/E4BG, V1505-E4B/E4BG]

Oil clearance between crankshaft journal and crankshaft bearing 1	Factory specification	0.0340 to 0.114 mm 0.00134 to 0.00448 in.
	Allowable limit	0.20 mm 0.0079 in.

Crankshaft journal O.D.	Factory specification	47.934 to 47.950 mm 1.8872 to 1.8877 in.
Crankshaft bearing 1 I.D.	Factory specification	47.984 to 48.048 mm 1.8892 to 1.8916 in.

(Reference)

- Undersize dimensions of crankshaft journal

Undersize	**0.20 mm 0.0079 in.**	**0.40 mm 0.016 in.**
Dimension **A**	2.3 to 2.7 mm radius 0.091 to 0.10 in. radius	2.3 to 2.7 mm radius 0.091 to 0.10 in. radius
*Dimension **B**	1.0 to 1.5 mm relief 0.040 to 0.059 in. relief	1.0 to 1.5 mm relief 0.040 to 0.059 in. relief
Dimension **C**	47.734 to 47.750 mm dia. 1.8793 to 1.8799 in. dia.	47.534 to 47.550 mm dia. 1.8715 to 1.8720 in. dia.
The crankshaft journal must be fine-finished to higher than Rmax = 0.8S *Holes to be de-burred and edges rounded with 1.0 to 1.5 mm (0.040 to 0.059 in.) relief.		

[D1305-E4B/E4BG]

Oil clearance between crankshaft journal and crankshaft bearing 1	Factory specification	0.0340 to 0.119 mm 0.00134 to 0.00468 in.
	Allowable limit	0.20 mm 0.0079 in.

Crankshaft journal O.D.	Factory specification	51.921 to 51.940 mm 2.0442 to 2.0448 in.
Crankshaft bearing 1 I.D.	Factory specification	51.974 to 52.040 mm 2.0463 to 2.0488 in.

(Reference)

- Undersize dimensions of crankshaft journal

Undersize	**0.20 mm 0.0079 in.**	**0.40 mm 0.016 in.**
Dimension **A**	2.3 to 2.7 mm radius 0.091 to 0.10 in. radius	2.3 to 2.7 mm radius 0.091 to 0.10 in. radius
*Dimension **B**	1.0 to 1.5 mm relief 0.040 to 0.059 in. relief	1.0 to 1.5 mm relief 0.040 to 0.059 in. relief
Dimension **C**	51.721 to 51.740 mm dia. 2.0363 to 2.0370 in. dia.	51.521 to 51.540 mm dia. 2.0284 to 2.0291 in. dia.
The crankshaft journal must be fine-finished to higher than Rmax = 0.8S *Holes to be de-burred and edges rounded with 1.0 to 1.5 mm (0.040 to 0.059 in.) relief.		

9Y1210784ENS0089US0

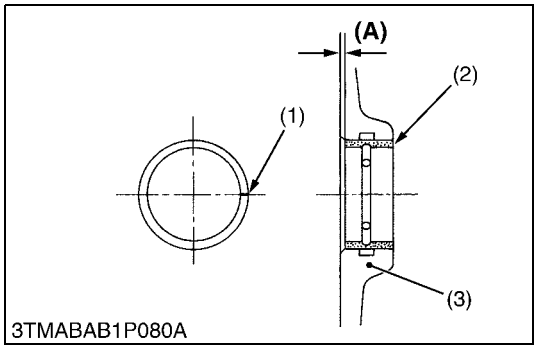

Replacing Crankshaft Bearing 1

(When removing)

1. Press out the used crankshaft bearing 1 using a crankshaft bearing 1 replacing tool. (See page "SPECIAL TOOLS".)

(When installing)

1. Clean a new crankshaft bearing 1 and crankshaft journal bore, and apply engine oil to them.
2. Using a crankshaft bearing 1 replacing tool, press fit a new bearing 1 (2) so that its seam (1) directs toward the exhaust manifold side. (See figure.)

Dimension **(A)**	Factory specification	0 to 0.3 mm 0 to 0.01 in.

(1) Seam
(2) Crankshaft Bearing 1
(3) Cylinder Block

(A) Dimension

9Y1210784ENS0090US0

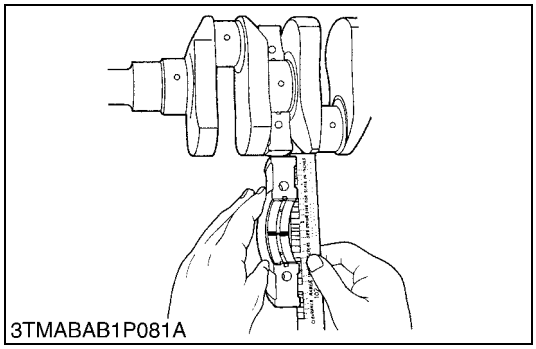
3TMABAB1P081A

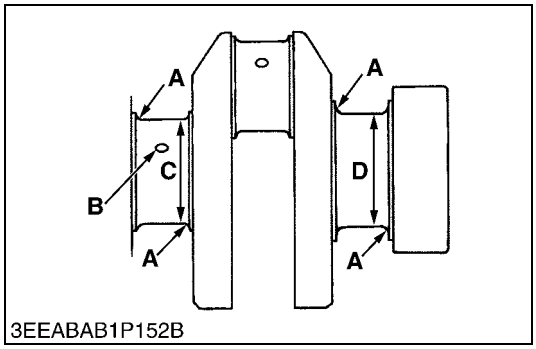

3EEABAB1P152B

Oil Clearance between Crankshaft Journal and Crankshaft Bearing 2 (Crankshaft Bearing 3)

1. Put a strip of plastigage on the center of the journal.
2. Install the bearing case and tighten the baring case screws 1 to the specified torque, and remove the bearing case again.
3. Measure the amount of the flattening with the scale and get the oil clearance.
4. If the clearance exceeds the allowable limit, replace the crankshaft bearing 2 (1) and crankshaft bearing (3).
5. If the same size bearing is useless because of the crankshaft journal wear, replace it with an undersize one referring to the table and figure.

■ **NOTE**

- **Be sure not to move the crankshaft while the bearing case screws are tightened.**

[D1005-E4B/E4BG, D1105-E4B/E4BG, V1505-E4B/E4BG]

Oil clearance between crankshaft journal and crankshaft bearing 2	Factory specification	0.034 to 0.095 mm 0.0014 to 0.0037 in.
	Allowable limit	0.20 mm 0.0079 in.

Crankshaft journal O.D. (Intermediate)	Factory specification	47.934 to 47.950 mm 1.8872 to 1.8877 in.
Crankshaft bearing 2 I.D.	Factory specification	47.984 to 48.029 mm 1.8892 to 1.8909 in.

Oil clearance between crankshaft journal and crankshaft bearing 3	Factory specification	0.0340 to 0.103 mm 0.00134 to 0.00405 in.
	Allowable limit	0.20 mm 0.0079 in.

Crankshaft journal O.D. (Flywheel side)	Factory specification	51.921 to 51.940 mm 2.0442 to 2.0448 in.
Crankshaft bearing 3 I.D.	Factory specification	51.974 to 52.024 mm 2.0463 to 2.0481 in.

(Reference)

- Undersize dimensions of crankshaft journal

Undersize	**0.20 mm 0.0079 in.**	**0.40 mm 0.016 in.**
Dimension **A**	2.3 to 2.7 mm radius 0.091 to 0.10 in. radius	2.3 to 2.7 mm radius 0.091 to 0.10 in. radius
*Dimension **B**	1.0 to 1.5 mm relief 0.040 to 0.059 in. relief	1.0 to 1.5 mm relief 0.040 to 0.059 in. relief
Dimension **C**	47.734 to 47.750 mm dia. 1.8793 to 1.8799 in. dia.	47.534 to 47.550 mm dia. 1.8715 to 1.8720 in. dia.
Dimension **D**	51.721 to 51.740 mm dia. 2.0362 to 2.0370 in. dia.	51.521 to 51.540 mm dia. 2.0284 to 2.0291 in. dia.
The crank pin must be fine-finished to higher than Rmax = 0.8S *Holes to be de-burred and edges rounded with 1.0 to 1.5 mm (0.040 to 0.059 in.) relief.		

(To be continued)

(Continued)

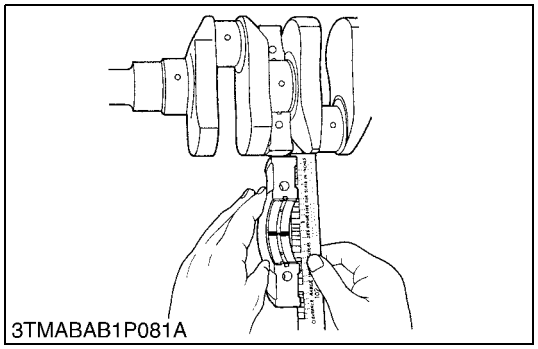
3TMABAB1P081A

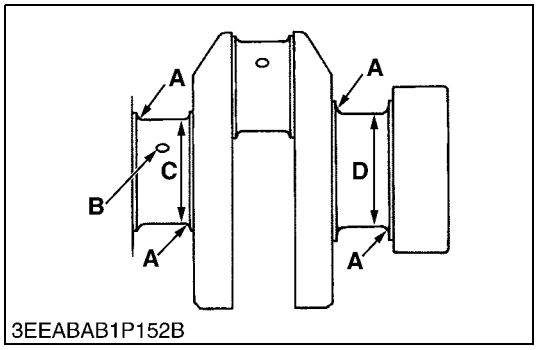

3EEABAB1P152B

[D1305-E4B/E4BG]

Oil clearance between crankshaft journal and crankshaft bearing 2	Factory specification	0.0340 to 0.103 mm 0.00134 to 0.00405 in.
	Allowable limit	0.20 mm 0.0079 in.
Crankshaft journal O.D. (Intermediate)	Factory specification	51.921 to 51.940 mm 2.0442 to 2.0448 in.
Crankshaft bearing 2 I.D.	Factory specification	51.974 to 52.024 mm 2.0463 to 2.0481 in.
Oil clearance between crankshaft journal and crankshaft bearing 3	Factory specification	0.0340 to 0.103 mm 0.00134 to 0.00405 in.
	Allowable limit	0.20 mm 0.0079 in.
Crankshaft journal O.D. (Flywheel side)	Factory specification	51.921 to 51.940 mm 2.0442 to 2.0448 in.
Crankshaft bearing 3 I.D.	Factory specification	51.974 to 52.024 mm 2.0463 to 2.0481 in.

(Reference)

- Undersize dimensions of crankshaft journal

Undersize	0.20 mm 0.0079 in.	0.40 mm 0.016 in.
Dimension **A**	2.3 to 2.7 mm radius 0.091 to 0.10 in. radius	2.3 to 2.7 mm radius 0.091 to 0.10 in. radius
*Dimension **B**	1.0 to 1.5 mm relief 0.040 to 0.059 in. relief	1.0 to 1.5 mm relief 0.040 to 0.059 in. relief
Dimension **C**	51.721 to 51.740 mm dia. 2.0363 to 2.0370 in. dia.	51.521 to 51.540 mm dia. 2.0284 to 2.0291 in. dia.
The crank pin must be fine-finished to higher than Rmax = 0.8S *Holes to be de-burred and edges rounded with 1.0 to 1.5 mm (0.040 to 0.059 in.) relief.		

9Y1210784ENS0091US0

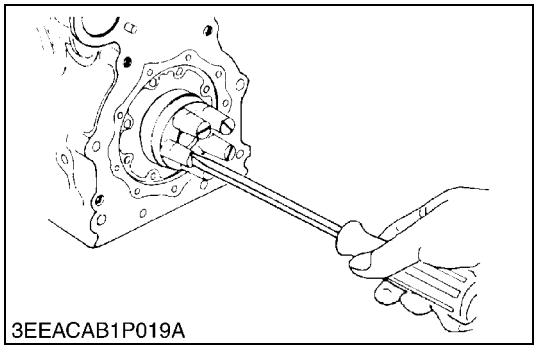
3EEACAB1P019A

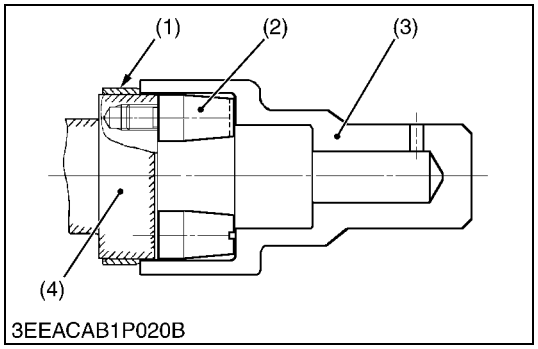

3EEACAB1P020B

Replacing Crankshaft Sleeve

1. Remove the used crankshaft sleeve.
2. Set the sleeve guide (2) to the crankshaft.
3. Heat a new sleeve to a temperature between 150 and 200 °C (302 and 392 °F), and fix the sleeve to the crankshaft as shown in figure.
4. Press fit the sleeve using the auxiliary socket for pushing (3).

■ **NOTE**

- **Mount the sleeve with its largely chamfered surface facing outward.**
- **Should heating is not enough, a sleeve might stop halfway, so careful.**

(1) Crankshaft Sleeve
(2) Sleeve Guide
(3) Auxiliary Socket for Pushing
(4) Crankshaft

9Y1210784ENS0092US0

(5) Cylinder

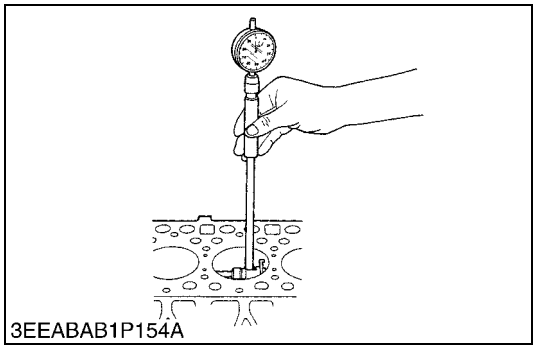
3EEABAB1P154A

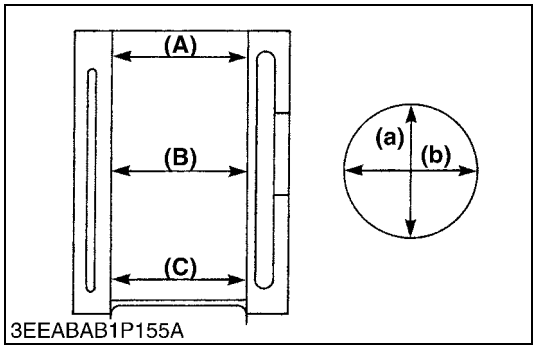

3EEABAB1P155A

Cylinder Wear

1. Measure the I.D. of the cylinder at the six positions (see figure) with a cylinder gauge to find the maximum and minimum I.D.'s.
2. Get the difference (Maximum wear) between the maximum and the minimum I.D.'s.
3. If the wear exceeds the allowable limit, bore and hone to the oversize dimension. (Refer to "Correcting Cylinder".)
4. Visually check the cylinder wall for scratches. If deep scratches are found, the cylinder should be bored. (Refer to "Correcting Cylinder".)

Cylinder I.D.	Factory specification	D1005-E4B/ E4BG	76.000 to 76.019 mm 2.9922 to 2.9929 in.
		D1105-E4B/ E4BG D1305-E4B/ E4BG V1505-E4B/ E4BG	78.000 to 78.019 mm 3.0709 to 3.0716 in.
	Allowable limit	D1005-E4B/ E4BG	76.15 mm 2.998 in.
		D1105-E4B/ E4BG D1305-E4B/ E4BG V1505-E4B/ E4BG	78.15 mm 3.077 in.

(A) Top
(B) Middle
(C) Bottom (Skirt)
(a) Right-angled to Piston Pin
(b) Piston Pin Direction

9Y1210784ENS0093US0

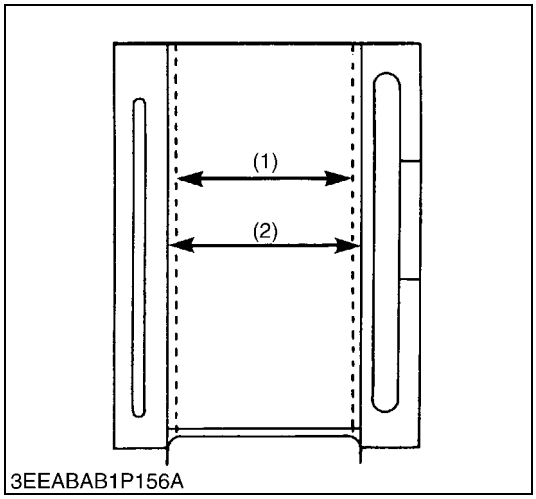

3EEABAB1P156A

Correcting Cylinder

1. When the cylinder is worn beyond the allowable limit, bore and hone it to the specified dimension.

Oversized cylinder liner I.D.	Factory specification	D1005-E4B/ E4BG	76.500 to 76.519 mm 3.0119 to 3.0125 in.
		D1105-E4B/ E4BG D1305-E4B/ E4BG V1505-E4B/ E4BG	78.500 to 78.519 mm 3.0906 to 3.0912 in.
	Allowable limit	D1005-E4B/ E4BG	76.65 mm 3.018 in.
		D1105-E4B/ E4BG D1305-E4B/ E4BG V1505-E4B/ E4BG	78.65 mm 3.096 in.
Finishing	Hone to 1.2 to 2.0 µm R max. (48 to 78 µin. R max.)		

2. Replace the piston and piston rings with oversize one. Oversize: 0.5 mm (0.02 in.)

■ **NOTE**
- **When the oversize cylinder is worn beyond the allowable limit, replace the cylinder block with a new one.**

(1) Cylinder I.D. (Before Correction) (2) Cylinder I.D. (Oversize)

9Y1210784ENS0094US0

(6) Oil Pump

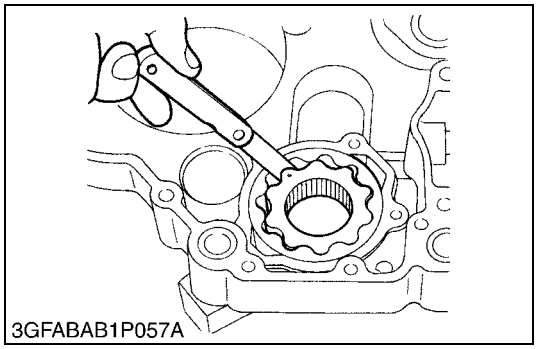
3GFABAB1P057A

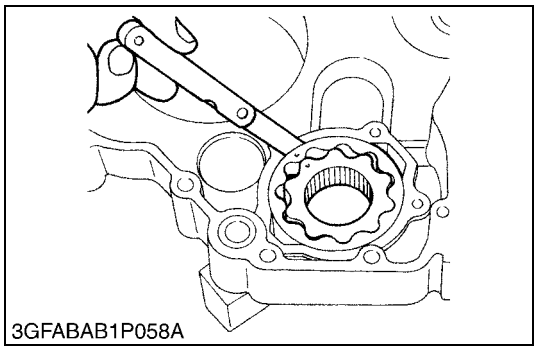
3GFABAB1P058A

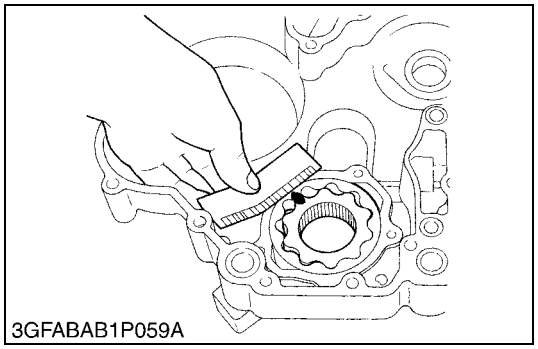
3GFABAB1P059A

Rotor Lobe Clearance

1. Measure the clearance between lobes of the inner rotor and the outer rotor with a feeler gauge.
2. If the clearance exceeds the factory specifications, replace the oil pump rotor assembly.

Rotor lobe clearance	Factory specification	0.060 to 0.18 mm 0.0024 to 0.0071 in.

9Y1210784ENS0095US0

Clearance between Outer Rotor and Pump Body

1. Measure the clearance between the outer rotor and the pump body with a feeler gauge.
2. If the clearance exceeds the factory specifications, replace the oil pump rotor assembly.

Clearance between outer rotor and pump body	Factory specification	0.100 to 0.180 mm 0.00394 to 0.00708 in.

9Y1210784ENS0096US0

Clearance between Rotor and Cover

1. Put a strip of plastigage onto the rotor face with grease.
2. Install the cover and tighten the screws.
3. Remove the cover carefully, and measure the amount of the flattening with the scale and get the clearance.
4. If the clearance exceeds the factory specifications, replace the oil pump rotor assembly.

Clearance between rotor and cover	Factory specification	0.025 to 0.075 mm 0.00099 to 0.0029 in.

9Y1210784ENS0097US0

(7) Starter

[A]

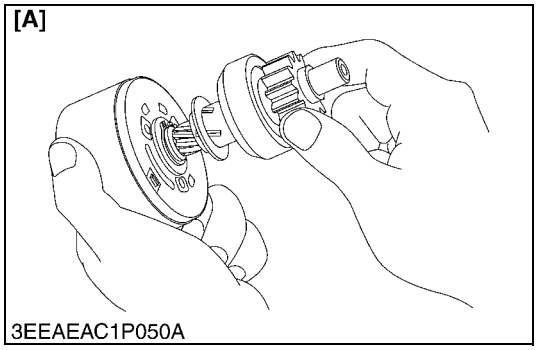
3EEAEAC1P050A

[B]

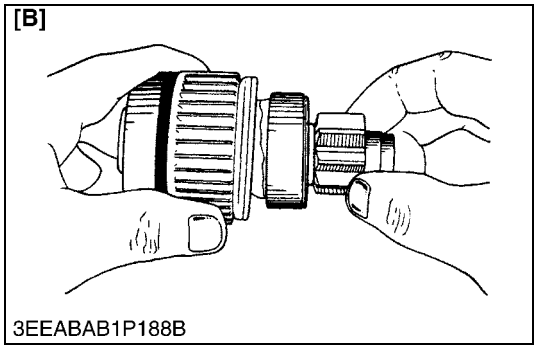
3EEABAB1P188B

Overrunning Clutch

1. Check the pinion and if worn or damage, replace the clutch assembly.
2. Check that the pinion turns freely and smoothly in the overrunning direction and does not slip in the cranking direction.
3. If the pinion slips or does not turn in both directions, replace the overrunning clutch assembly.

■ **NOTE**

- **Do not wash off the grease in the overrunning clutch with the chemicals or oils.**

[A] Electromagnetic Drive Type **[B] Planetary Gear Reduction Type**

9Y1210784ENS0098US0

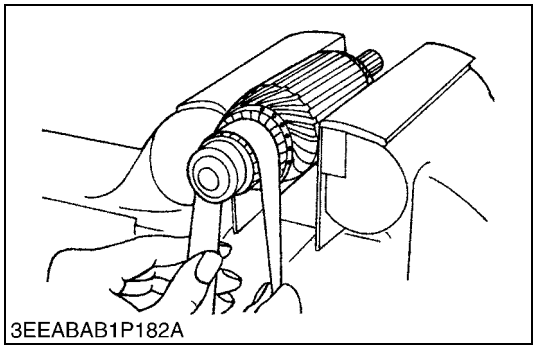
3EEABAB1P182A

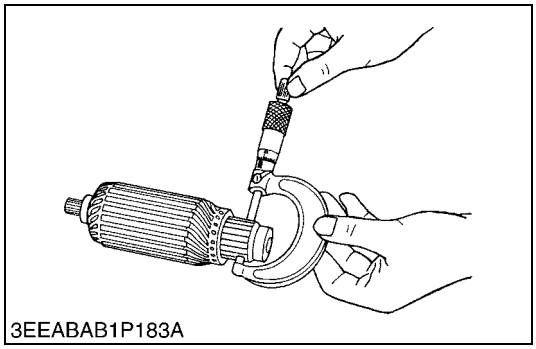
3EEABAB1P183A

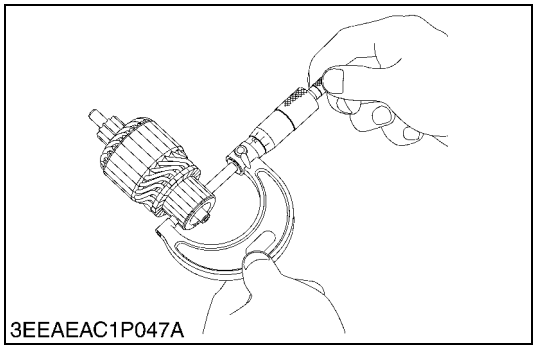
3EEAEAC1P047A

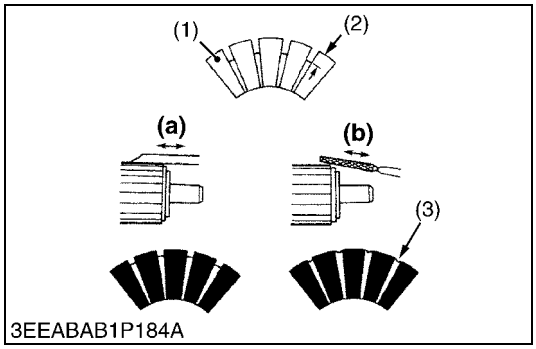

3EEABAB1P184A

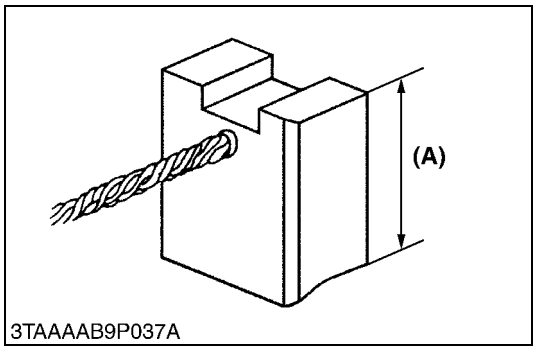

3TAAAAB9P037A

Commutator and Mica

1. Check the contact of the commutator for wear, and grind the commutator with emery paper if it is slightly worn.
2. Measure the commutator O.D. with an outside micrometer at several points.
3. If the minimum O.D. is less than the allowable limit, replace the armature.
4. If the difference of the O.D.'s exceeds the allowable limit, correct the commutator on a lathe to the factory specification.
5. Measure the mica undercut.
6. If the undercut is less than the allowable limit, correct it with a saw blade and chamfer the segment edges.

Commutator O.D.	Factory specification	Electromagnetic drive type	28.0 mm 1.10 in.
		Gear reduction type	30.0 mm 1.18 in.
	Allowable limit	Electromagnetic drive type	27.0 mm 1.06 in.
		Gear reduction type	29.0 mm 1.14 in.

Difference of O.D.'s	Factory specification	Electromagnetic drive type	Less than 0.05 mm 0.002 in.
		Gear reduction type	Less than 0.02 mm 0.0008 in.
	Allowable limit	Electromagnetic drive type	0.4 mm 0.02 in.
		Gear reduction type	0.05 mm 0.002 in.

Mica under cut	Factory specification	0.50 to 0.80 mm 0.020 to 0.031 in.
	Allowable limit	0.20 mm 0.0079 in.

(1) Segment
(2) Depth of Mica
(3) Mica
(a) Correct
(b) Incorrect

9Y1210784ENS0099US0

Brush Wear

1. If the connect face of the brush is dirty or dusty, clean it with emery paper.
2. Measure the brush length **(A)** with vernier caliper.
3. If the length is than the allowable limit, replace the yoke assembly and brush holder.

Brush length **(A)**	Factory specification	16.0 mm 0.630 in.
	Allowable limit	10.5 mm 0.413 in.

(A) Brush Length

9Y1210784ENS0100US0

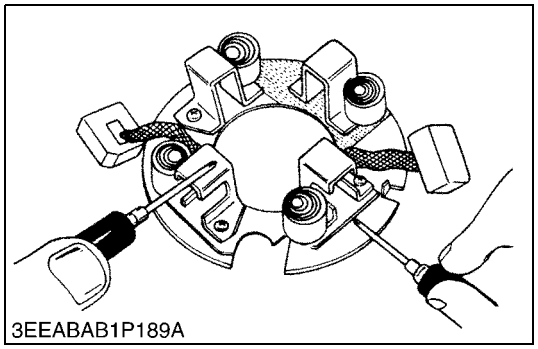
3EEABAB1P189A

Brush Holder

1. Check the continuity across the brush holder and the holder support with a circuit tester.
2. If it conducts, replace the brush holder.

9Y1210784ENS0101US0

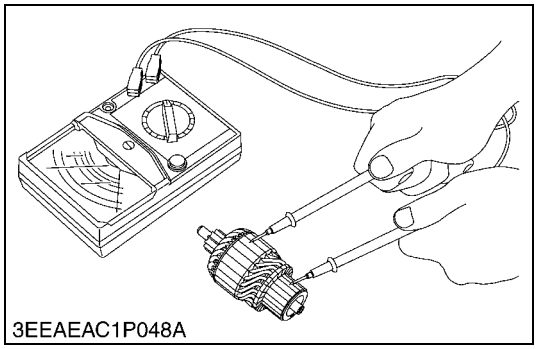
3EEAEAC1P048A

Armature Coil

1. Check the continuity across the commutator and armature coil core with resistance range of circuit tester.
2. If it conducts, replace the armature.
3. Check the continuity across the segments of the commutator with resistance range of circuit tester.
4. If it dose not conduct, replace the armature.

9Y1210784ENS0102US0

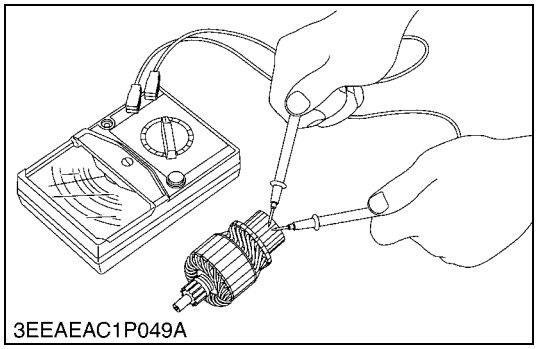
3EEAEAC1P049A

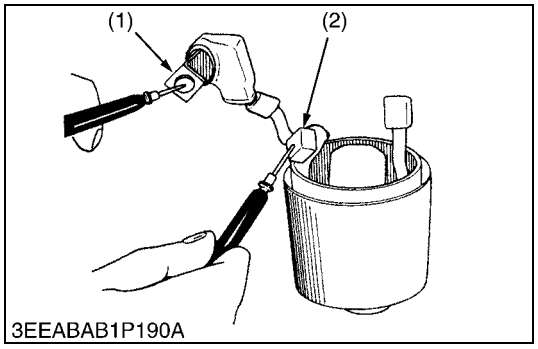

3EEABAB1P190A

Field Coil

1. Check the continuity across the lead (1) and brush (2) with a circuit tester.
2. If it dose not conduct, replace the yoke assembly.
3. Check the continuity across the brush (2) and yoke (3) with a circuit tester.
4. If it conducts, replace the yoke assembly.

(1) Lead
(2) Brush
(3) Yoke

9Y1210784ENS0103US0

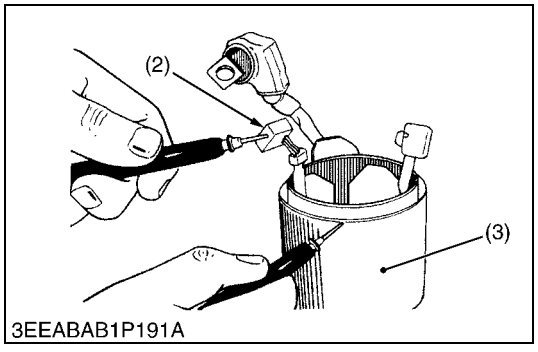

3EEABAB1P191A

(8) Alternator

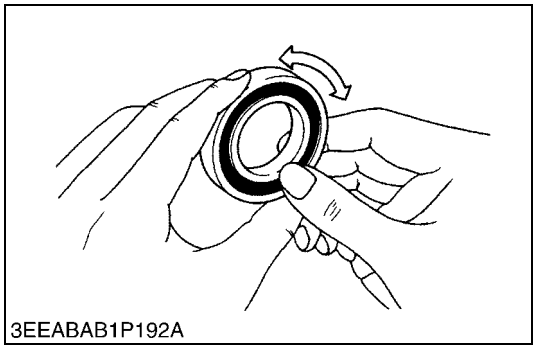
3EEABAB1P192A

Bearing

1. Check the bearing for smooth rotation.
2. If it does not rotate smoothly, replace it.

9Y1210784ENS0104US0

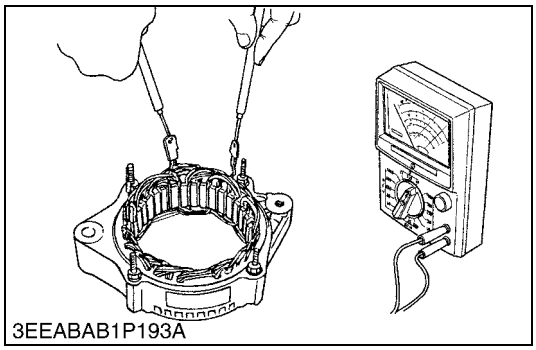
3EEABAB1P193A

Stator

1. Measure the resistance across each lead of the stator coil with resistance range of circuit tester.
2. If the measurement is not within factory specification, replace it.
3. Check the continuity across each stator coil lead and core with resistance range of circuit tester.
4. If infinity is not indicated, replace it.

Resistance	Factory specification	Less than 1.0 Ω

9Y1210784ENS0105US0

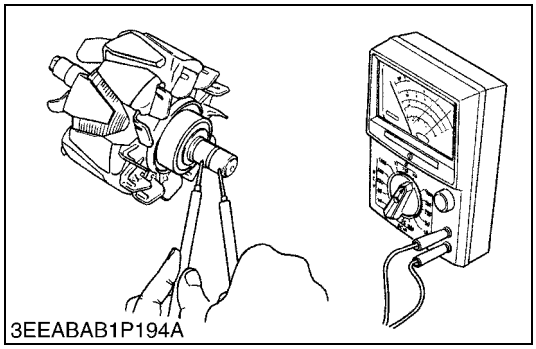
3EEABAB1P194A

Rotor

1. Measure the resistance across the slip rings.
2. If the resistance is not the factory specification, replace it.
3. Check the continuity across the slip ring and core with resistance range of circuit tester.
4. If infinity is not indicated, replace it.

Resistance	Factory specification	2.9 Ω

9Y1210784ENS0106US0

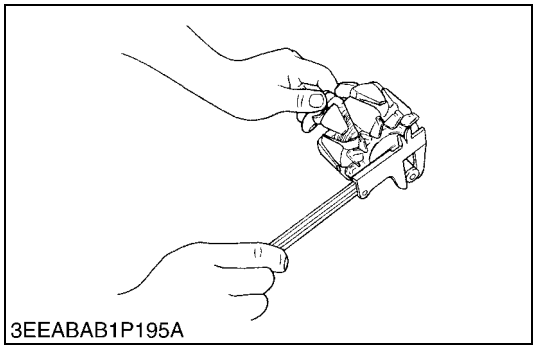
3EEABAB1P195A

Slip Ring

1. Check the slip ring for score.
2. If scored, correct with an emery paper or on a lathe.
3. Measure the O.D. of slip ring with vernier calipers.
4. If the measurement is less than the allowable limit, replace it.

Slip ring O.D.	Factory specification	14.4 mm 0.567 in.
	Allowable limit	14.0 mm 0.551 in.

9Y1210784ENS0107US0

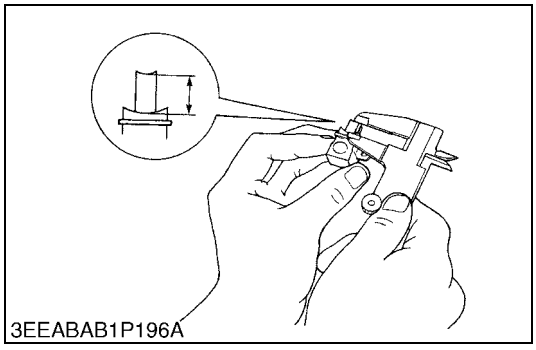
3EEABAB1P196A

Brush Wear

1. Measure the brush length with vernier calipers.
2. If the measurement is less than allowable limit, replace it.
3. Make sure that the brush moves smoothly.
4. If the brush is damaged, replace it.

Brush length **(A)**	Factory specification	10.0 mm 0.394 in.
	Allowable limit	8.4 mm 0.33 in.

9Y1210784ENS0108US0

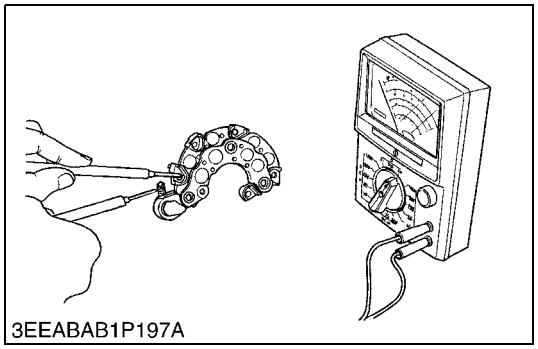
3EEABAB1P197A

Rectifier

1. Check the continuity across each diode of rectifier with resistance range of circuit tester.
2. The rectifier is normal if the diode in the rectifier conducts in one direction and does not conduct in the reverse direction.

9Y1210784ENS0109US0

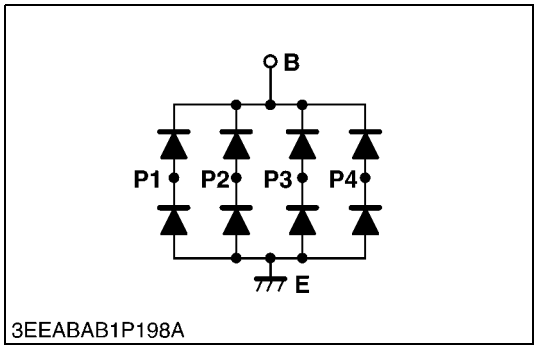

3EEABAB1P198A

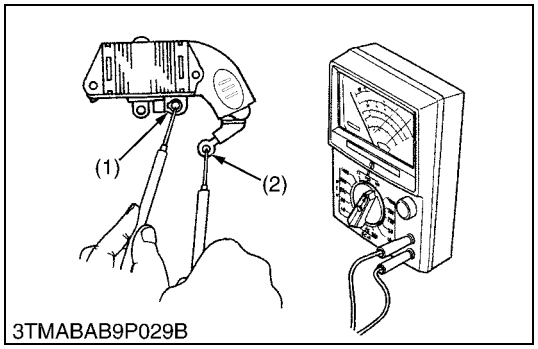

3TMABAB9P029B

IC Regulator

1. Check the continuity across the **B** terminal (2) and the **F** terminal (1) of IC regulator with resistance range of circuit tester.
2. The IC regulator is normal if the conducts in one direction and does not conduct in the reverse direction.

(1) **F** Terminal (2) **B** Terminal

9Y1210784ENS0110US0

EDITOR:
KUBOTA FARM & INDUSTRIAL MACHINERY SERVICE, LTD.
64, ISHIZU-KITAMACHI, SAKAI-KU, SAKAI-CITY, OSAKA, 590-0823, JAPAN
PHONE : (81)72-241-1129
FAX : (81)72-245-2484
E-mail : ks_g.ksos-pub@kubota.com

Printed in Japan 2014. 04, S, EI, EI, engusa Code No.9Y111-07841
2013. 02, S, EI, EI, engusa

KUBOTA Corporation