HYDRO-GEAR®

FORWARD MOTION THROUGH FORWARD THINKING

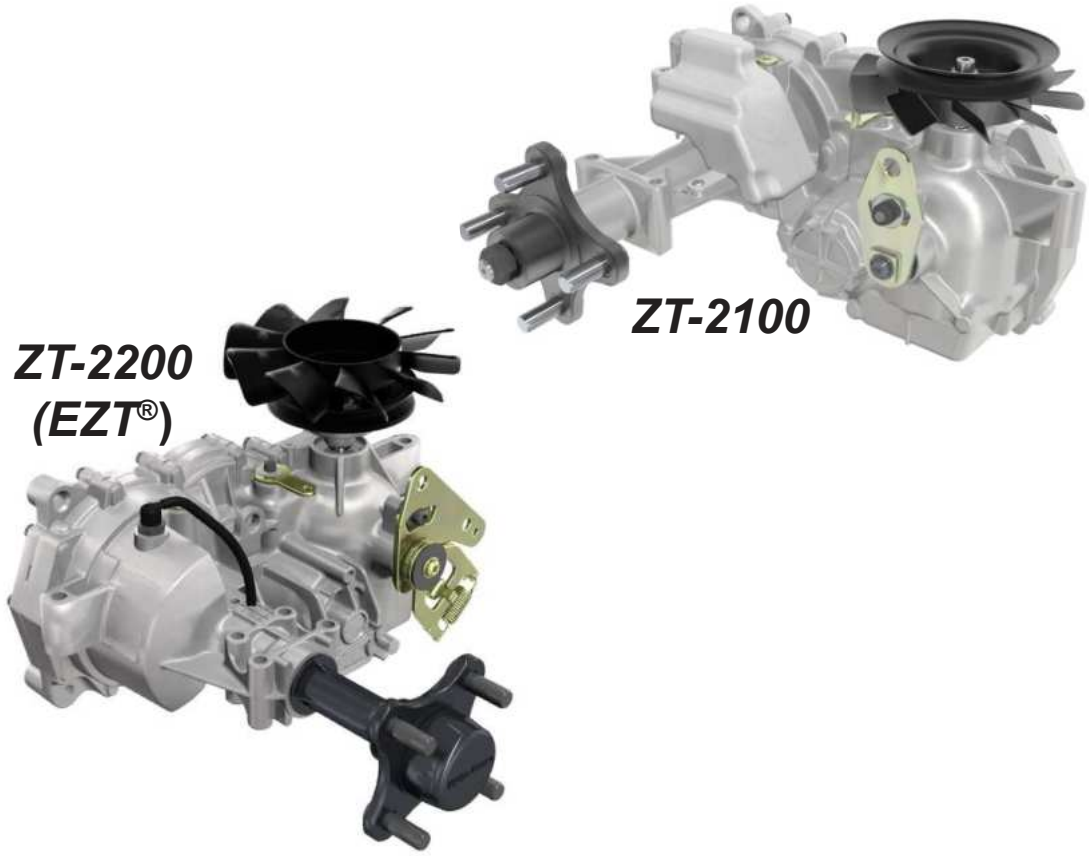

ZT-2100 / ZT-2200 (EZT®) Integrated Zero-Turn Transaxle Service and Repair Manual

BLN-52622
March 2018

TABLE OF CONTENTS

Section *Page*

Foreword 1

Description and Operation 2
- Introduction 2
- General Description 2
- Hydraulic Schematic 3
- External Features - ZT-2200) (EZT®) 4
- External Features - ZT-2100 5
- Technical Specifications 6
- Product Identification 7

Safety 8
- Personal Safety 8
- Tool Safety 8
- Work Area Safety 8
- Servicing Safety 8

Troubleshooting 9

Service and Maintenance 10
- External Maintenance 10
- Service and Maintenance Procedures 10
- Fluid Volume and Level 10
- Fluid Change Procedure 11
- Purging Procedures 12
- Return to Neutral Setting 13

ZT-2200 Repair 14
- How To Use This Section 14
- General Instructions 14
- Transaxle Removal 14
- Limited Disassembly 14
- Tools and Torques 15
- Hub Replacement 16-17
- Control Arm and Bypass Arm 18
- Seal Kit Replacement 19
- Cog Brake Assembly 20
- Disc Brake Assembly 21
- Side Cover 22
- Axle Shaft, Gears and Expansion Plate 23
- Motor Shaft 24
- Input Shaft and Bypass Rod 25
- Hydraulic Components 26-30
- Transaxle Installation 30
- Assembly After a Complete Teardown 30
- Sealant Application 31
- Schematic and Parts List 32-33

ZT-2100 Repair 35
- How To Use This Section 35
- General Instructions 35
- Transaxle Removal 35
- Limited Disassembly 35
- Tools and Torques 36
- Hub Replacement 37
- Expansion Tank 38
- Control Arm and Bypass Arm 39
- Seal Kit Replacement 40
- Cog Brake Assembly 41
- Side Cover 42
- Axle Shaft and Reduction Gears 43
- Motor Shaft 44
- Input Shaft and Bypass Rod 45
- Hydraulic Components 46-50
- Transaxle Installation 50
- Assembly After a Complete Teardown 51
- Sealant Application 52
- Schematic and Parts List 54-55

Glossary of Terms 56, 57

FOREWORD

Headquartered in Sullivan, Illinois, Hydro-Gear® is a world leader in the design, manufacture, and service of quality hydrostatic transaxles for the lawn and garden industry. The mission of our company is to be recognized by our customers and the industry as a world-class supplier and the quality leader in everything we do.

This Service and Repair Manual is designed to provide information useful in servicing and troubleshooting the Hydro-Gear ZT-2200 (EZT®) and ZT-2100 Integrated Zero-Turn Transaxle.

Also included is a glossary of terms that are frequently used throughout the industry and in Hydro-Gear service publications. Understanding terminology is very important!

It is necessary, and a good shop practice, that your service area be equipped with the proper tools and the mechanics be supplied the latest information available. All repair procedures illustrated in this guide are suggested, but preferred methods of repair.

Repair procedures require that the transaxle unit be removed from the vehicle.

This is not a certification, test or study guide for a certification test. If a technician is interested in certification, they should contact an agent representing OPEESA (Outdoor Power Equipment and Engine Service Association) at (860) 767-1770 or their Hydro-Gear Central Service Distributor. Many distributors will be hosting certification testing. These study guides will cover most of the products and manufacturers in our industry.

For more information about Hydro-Gear or our products, please contact your Central Service Distributor, or call our Customer Service Department at (217) 728-2581.

INTRODUCTION

The purpose of this manual is to provide information useful in servicing the Hydro-Gear® Integrated Zero-Turn Transaxle. This manual includes the ZT-2200 (EZT®) and ZT-2100 general descriptions, hydraulic schematics, technical specifications, servicing and troubleshooting procedures.

The transaxle normally will not require servicing during the life of the vehicle in which it is installed. Should other servicing be required, the exterior of the transaxle will need to be thoroughly cleaned before beginning most procedures. Do not wash the transaxle while it is hot. **Do not use a pressure washer to clean the unit.**

GENERAL DESCRIPTION

The ZT-2200 (EZT®) is a self contained unit designed for the transfer and control of power. It provides an infinitely variable speed range between zero and maximum in both forward and reverse modes of operation.

This transaxle uses a variable displacement pump with a maximum displacement of 10cc per revolution, and motor with a fixed displacement of 10cc per revolution. The variable displacement pump features a trunnion mounted swashplate with a direct-proportional displacement control. Reversing the direction of the swashplate reverses the flow of oil from the pump and thus reverses the direction of the motor output rotation. The pump and motor are of the axial piston design and utilize spherical nosed pistons which are held against a thrust race by internal compression springs.

The ZT-2200 (EZT®) and ZT-2100 have a self contained fluid supply and an internal filter. The fluid is forced through the filter by a positive “head” on the fluid in the housing/expansion tank with an assist by the negative pressure created in the pump pistons as they operate.

The check valves in the center section are used to control the make-up flow of the fluid to the low pressure side of the loop.

A cam style, block lifting bypass is utilized in the ZT-2200 (EZT®) and ZT-2100 to permit moving the vehicle for a short distance at a maximum of 2 m.p.h. (3.2 Km/h) without starting the engine.

WARNING

Actuating the bypass will result in the loss of hydrostatic braking capacity. The machine must be stationary on a level surface and in neutral when actuating the bypass.

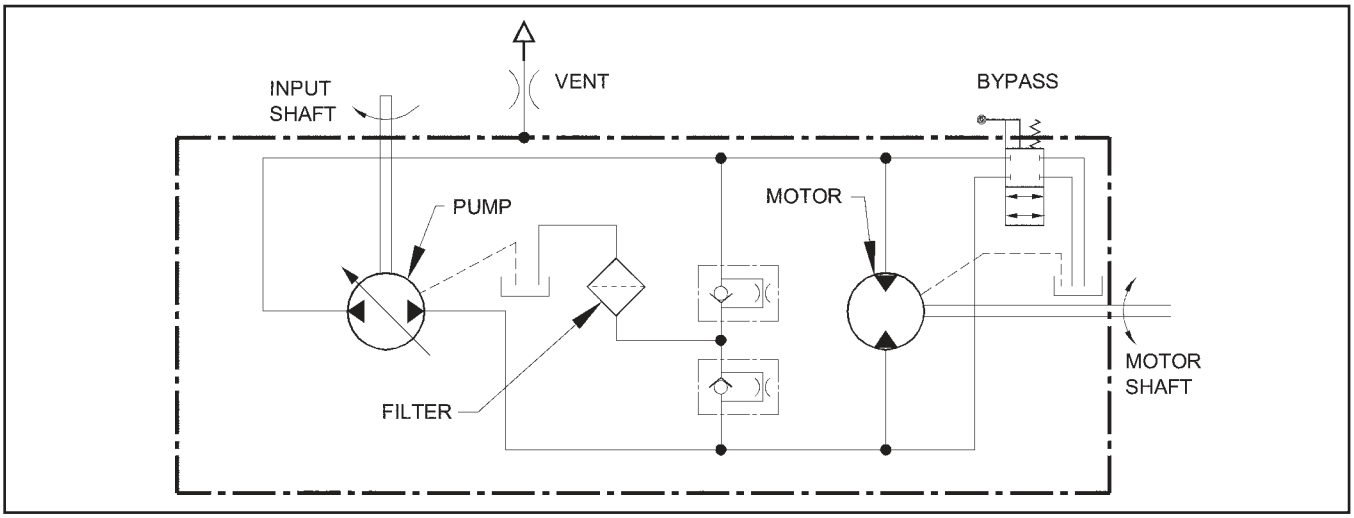

Figure 1. Hydraulic Schematic

ZT-2100 and ZT-2200 HYDRAULIC FLOW SCHEMATIC

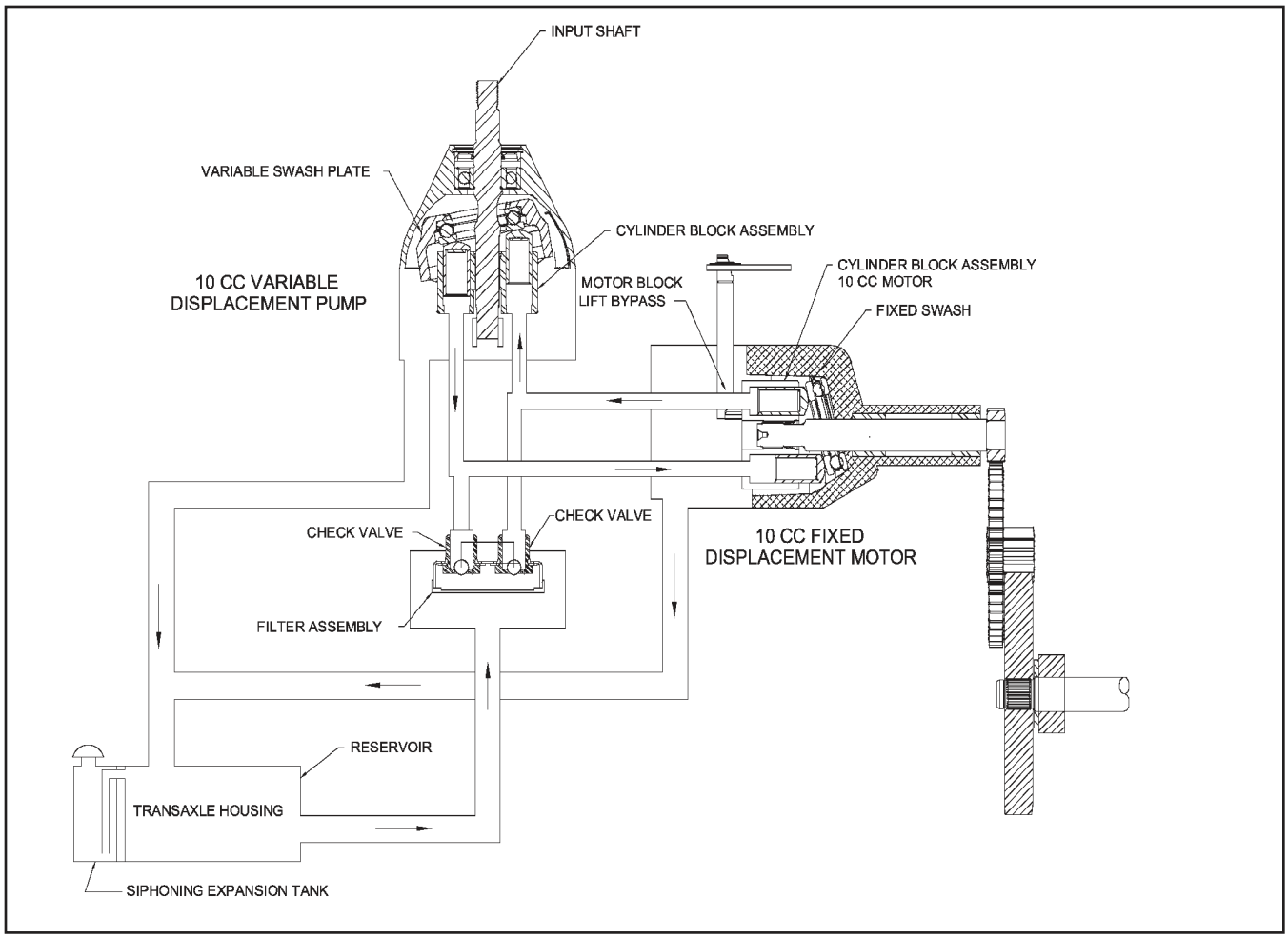

Figure 2. Hydraulic Flow Illustration

HYDRAULIC SCHEMATIC

Figure 2 provides an illustration of the hydraulic oil circuit. The oil supply for the hydraulic system of the ZT-2200 (EZT®) and ZT-2100 is also utilized for lubricating the components of the final drive assembly.

The input shaft and pump cylinder block are turned in one direction only by the engine/drive belt/pulley combination. Output of the oil flow is controlled by the direction and amount that the variable swashplate is angled. As the pump pistons compress they force the oil to flow through one of two passageways (forward or reverse) in the center section to the motor cylinder block and motor shaft. Since the motor has a fixed displacement angle it is forced to turn with the flow of oil. As the angle of the pump swashplate is increased the amount of oil being pumped will increase and cause a higher speed output of the motor. Reversing the angle of the pump swashplate will reverse the direction of oil flow.

During the operation of the transaxle, fluid is “lost” from the hydraulic loop through leak paths designed into the product for lubrication purposes (around pistons, under the rotating cylinder blocks, etc.). This “lost” fluid returns to the transaxle housing, then is pulled back into one of the check valves depending upon the direction of vehicle operation. All of this oil must pass through an internal filter.

The motor cylinder block mounts onto a splined motor shaft which drives the gear train.

The bypass feature in the ZT-2200 (EZT®) and ZT-2100 has a mechanical lever which lifts the motor block off of the center section running surface. This allows oil flow from the cylinder blocks to be discharged.

EXTERNAL FEATURES ZT-2200

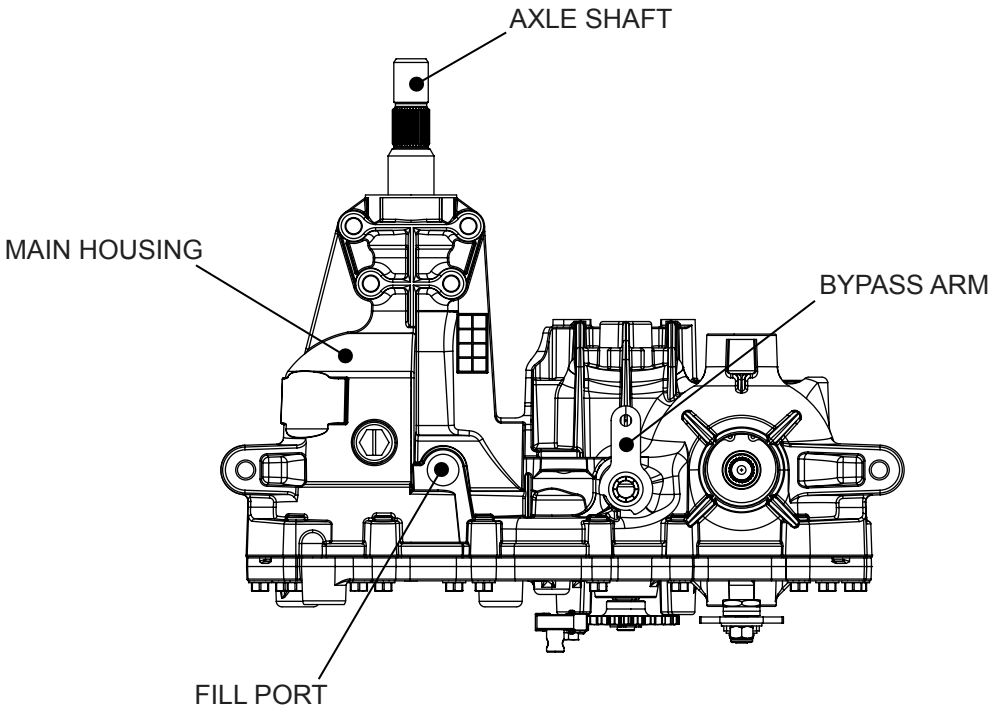

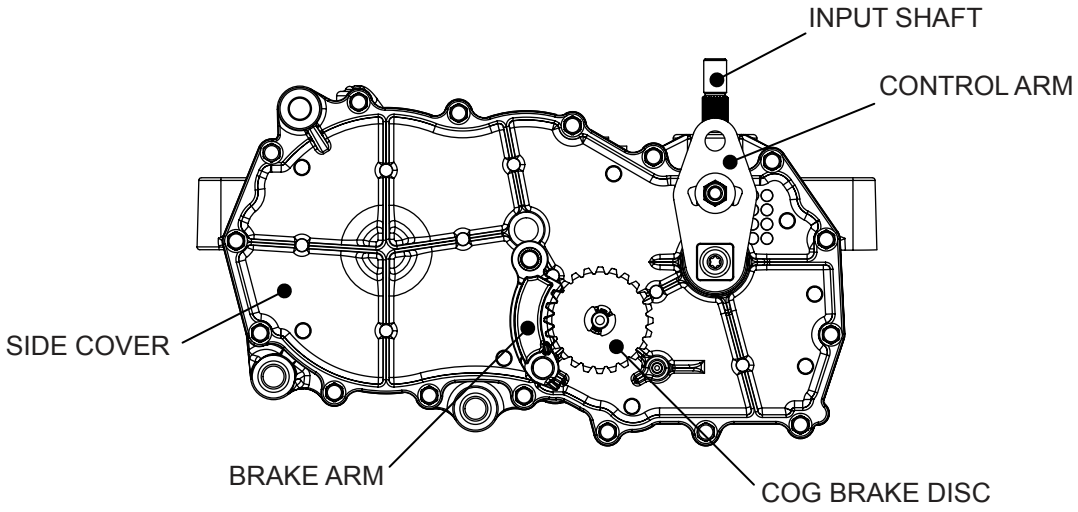

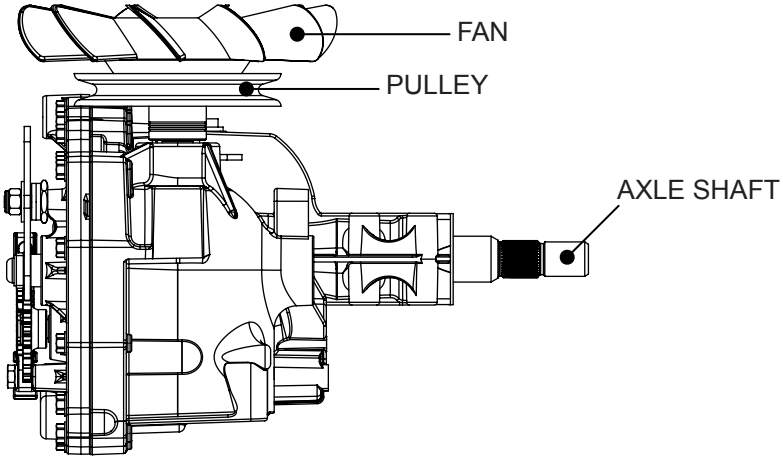

EXTERNAL FEATURES ZT-2100

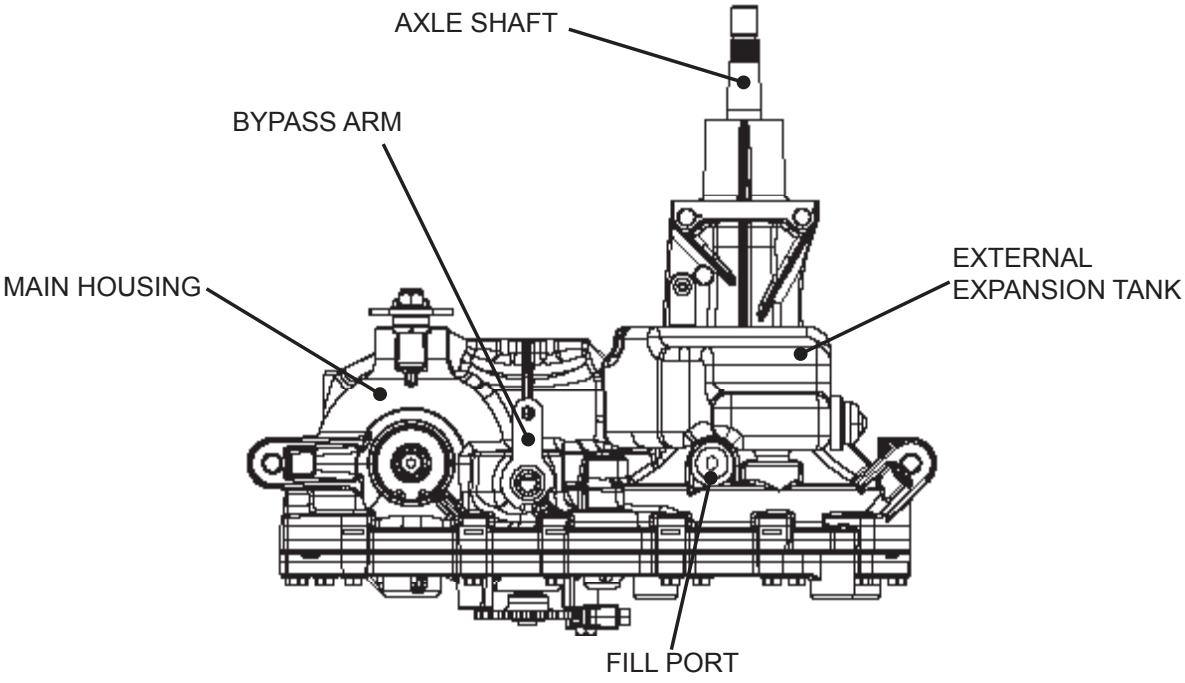

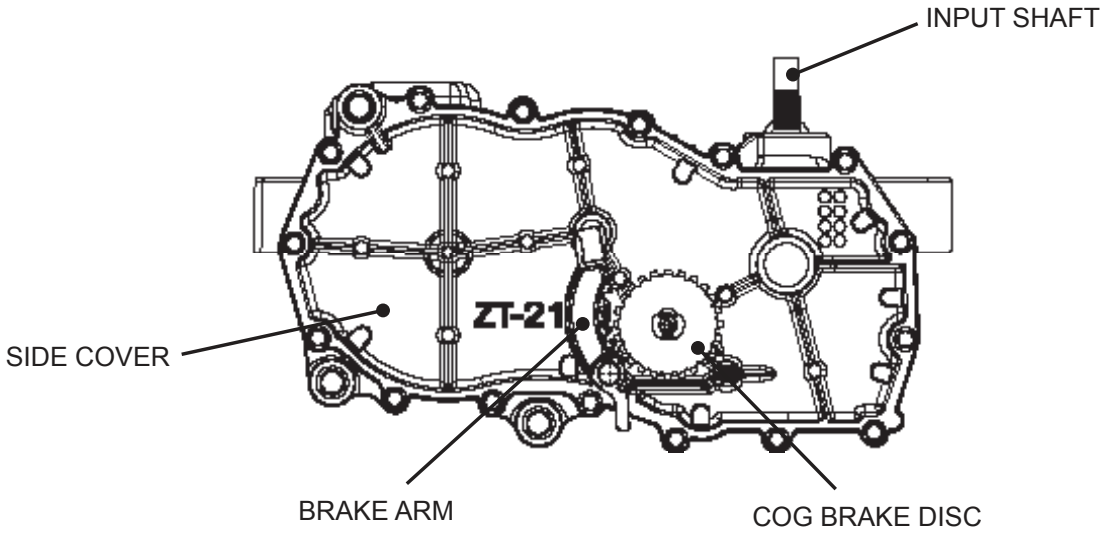

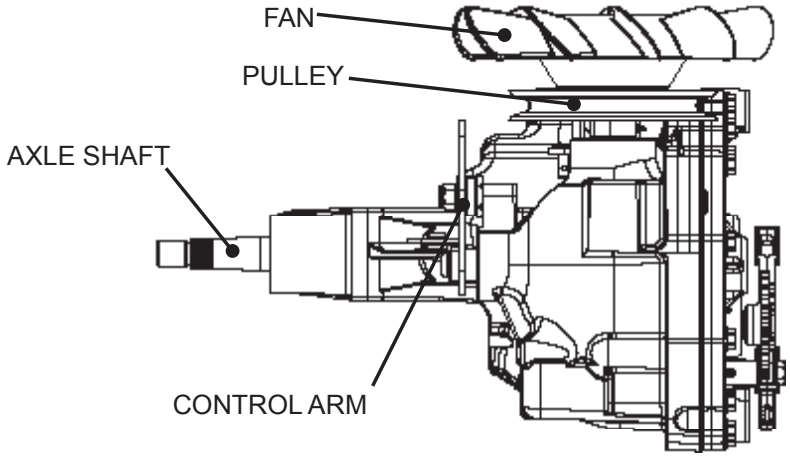

TECHNICAL SPECIFICATIONS ZT-2100

Technical specifications for the ZT-2100 are listed in Table 1.

Table 1. ZT-2100 Technical Specifications

ZT-2100	
Maximum Input Speed	3000 RPM
Minimum Input Speed	1800 RPM
Weight of unit	26.5 lbs (12 Kg)

Table 2. ZT-2100 Component Options

Component	Component Options	
Axle Shaft Diameter and End Options:	3/4″ Flange	
Brake Location:	Inboard	
Brake Type:	Cog	
Control Arm Location:	Outboard	
Control Arrangements:	Standard Control Arm	RTN (scissor style)
Overall Transaxle Reduction:	19.2:1	

TECHNICAL SPECIFICATIONS ZT-2200(EZT)

Technical specifications for the ZT-2200 are listed in Table 3.

Table 3. ZT-2200 Technical Specifications

ZT-2200	
Maximum Input Speed	3000 RPM
Minimum Input Speed	1800 RPM
Weight of unit	29 lbs (13 Kg)

Table 4. ZT-2200 Component Options

Component	Component Options	
Axle Shaft Diameter and End Options:	1″ Flange	1″ DD
Brake Location:	Inboard	Outboard
Brake Type:	Cog	Disc
Control Arm Location:	Inboard	Outboard
Control Arrangements:	Standard Control Arm	RTN (scissor style)
Overall Transaxle Reduction:	19.2:1	21.2:1

PRODUCT IDENTIFICATION

The model and configuration of the ZT-2200 and ZT-2100 can be determined from the label shown in Figure 3.

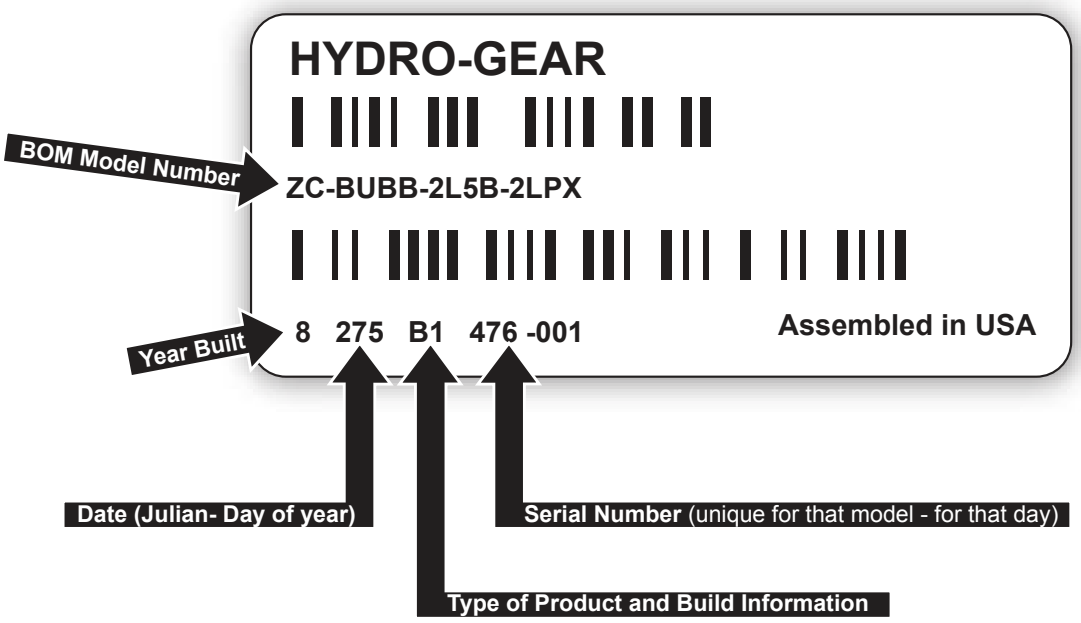

Figure 3. Configuration Label

 This symbol points out important safety instructions which, if not followed, could endanger the personal safety and/or property of yourself and others. Read and follow all instructions in this manual before attempting maintenance on your transaxle. When you see this symbol - **HEED ITS WARNING.**



WARNING

POTENTIAL FOR SERIOUS INJURY

Inattention to proper safety, operation, or maintenance procedures could result in personal injury, or damage to the equipment. Before servicing or repairing the ZT-2100 or ZT-2200 (EZT®), fully read and understand the safety precautions described in this section.

PERSONAL SAFETY

Certain safety precautions must be observed while servicing or repairing the ZT2100 or ZT-2200 (EZT®). This section addresses some of these precautions but must not be considered an all-inclusive source on safety information. This section is to be used in conjunction with all other safety material which may apply, such as:

1) Other manuals pertaining to this machine,
2) Local and shop safety rules and codes,
3) Governmental safety laws and regulations.

Be sure that you know and understand the equipment and the hazards associated with it. Do not place speed above safety.

Notify your supervisor whenever you feel there is any hazard involving the equipment or the performance of your job.

Never allow untrained or unauthorized personnel to service or repair the equipment.

Wear appropriate clothing. Loose or hanging clothing or jewelry can be hazardous. Use the appropriate safety equipment, such as eye and hearing protection, and safety-toe and slip-proof shoes.

Never use compressed air to clean debris from yourself or your clothing.

TOOL SAFETY

Use the proper tools and equipment for the task.

Inspect each tool before use and replace any tool that may be damaged or defective.

WORK AREA SAFETY

Keep the work area neat and orderly. Be sure it is well lit, that extra tools are put away, trash and refuse are in the proper containers, and dirt or debris have been removed from the working areas of the machine.

The floor should be clean and dry, and all extension cords or similar trip hazards should be removed.

SERVICING SAFETY

Certain procedures may require the vehicle to be disabled in order to prevent possible injury to the servicing technician and/or bystanders.

The loss of hydrostatic drive line power may result in the loss of hydrostatic braking capability.

Some cleaning solvents are flammable. Use only approved cleaning materials: Do not use explosive or flammable liquids to clean the equipment.

To avoid possible fire, do not use cleaning solvents in an area where a source of ignition may be present.

“Discard used cleaning material in the appropriate containers according to local, state, and federal regulations.”

TROUBLESHOOTING

WARNING

Do not attempt any servicing or adjustments with the engine running. Use extreme caution while inspecting the drive belt assembly and all vehicle linkage!

Follow all safety procedures outlined in the vehicle owner's manual.

In many cases, problems with the ZT-2100 and ZT-2200 (EZT®) are not related to a defective transaxle, but are caused by slipping drive belts, partially engaged bypass valves, and loose or damaged control linkages. Be sure to perform all operational checks and adjustments outlined in the Service and Maintenance section before assuming the transaxle is malfunctioning. Table 5 below provides a troubleshooting checklist to help determine the cause of operational problems.

Table 5. ZT-2100 and ZT-2200 (EZT) Troubleshooting Guide

Possible Cause	Corrective Action
UNIT OPERATES IN ONE DIRECTION ONLY	
Control linkage bent or out of adjustment	Repair or replace linkage, Page 10
Drive belt slipping or pulley damaged	Repair or replace drive belt or pulley, Page 10
VEHICLE DOES NOT DRIVE/TRACK STRAIGHT	
Vehicle tires improperly inflated	Refer to vehicle manufacturer suggested pressure
Control linkage bent or out of adjustment	Repair or replace linkage, Pages 10 and 13
Bypass assembly sticking	Repair or replace bypass, Page 25
UNIT IS NOISY	
Oil level low or contaminated oil	Fill to proper level or change oil, Page 11
Excessive loading	Reduce vehicle loading, Page 10
Loose parts	Repair or replace loose parts
Bypass assembly sticking	Repair or replace linkage
Air trapped in hydraulic system	Purge hydraulic system, Page 12
UNIT HAS NO/LOW POWER	
Engine speed low	Adjust to correct setting
Control linkage bent or out of adjustment	Repair or replace linkage, Page 10
Drive belt slipping or pulley damaged	Repair or replace drive belt or pulley, Page 10
Oil level low or contaminated oil	Fill to proper level or change oil, Page 11
Excessive loading	Reduce vehicle loading, Page 10
Bypass assembly sticking	Repair or replace linkage
Air trapped in hydraulic system	Purge hydraulic system, Page 12
UNIT IS OPERATING HOT	
Debris buildup around transaxle	Clean off debris, Pages 2 and 10
Cooling fan damaged	Repair or replace cooling fan
Oil level low or contaminated oil	Fill to proper level or change oil, Page 11
Excessive loading	Reduce vehicle loading, Page 10
Air trapped in hydraulic system	Purge hydraulic system, Page 12
TRANSAXLE LEAKS OIL	
Damaged seals, housing, or gaskets	Replace damaged component
Air trapped in hydraulic system	Purge hydraulic system, Page 12

NOTE: Any servicing dealer attempting a warranty repair must have prior approval before conducting maintenance of a Hydro-Gear® product unless the servicing dealer is a current Authorized Hydro-Gear Service Center.

EXTERNAL MAINTENANCE

Regular external maintenance of the ZT-2100 and ZT-2200 (EZT®) should include the following:

1. **Check the vehicle operator's manual for the recommended load ratings. Insure that the current application does not exceed load rating.**
2. Check oil level in accordance with Figure 4 Page 11.
3. Inspect the vehicle drive belt, idler pulley(s), and idler spring(s). Insure that no belt slippage can occur. Slippage can cause low input speed to the transmission.
4. Inspect the vehicle control linkage to the directional control arm on the transaxle. Also insure that the control arm is securely fastened to the trunnion arm of the transaxle.
5. Inspect the bypass mechanism on the transaxle and the vehicle linkage to insure that both actuate and release fully.

SERVICE AND MAINTENANCE PROCEDURES

Some of the service procedures presented on the following pages can be performed while the transaxle is mounted on the vehicle. Any repair procedures as mentioned in the repair section of this manual must be performed after the unit has been removed from the vehicle. The unit should be thoroughly cleaned before any service procedures are performed.

FLUIDS

The fluids used in Hydro-Gear products have been carefully selected, and only equivalent, or better products should be substituted.

Typically, an engine oil with a minimum rating of 9.0 cSt (55 SUS) at 230° F (110° C) and an API classification of SL is recommended. A 20W50 engine oil has been selected for use by the factory and is recommended for normal operating procedures.

"All fluids should be handled and disposed of according to local, state, and federal regulations."

FLUID VOLUME AND LEVEL

Fluid volume information is provided in Table 6, page 11.

Certain situations may require additional fluid to be added or even replaced. Refer to Page 4 and 5 for the proper fill port location.

Fill the ZT-2100 and ZT-2200 (EZT®) so the oil level is .75"-1.50" (19-38 mm) below the oil fill port.

A volume of 53.3 fl. oz. to 55.9 fl. oz. should bring the the fluid to the correct level in the transaxle.

Recheck the fluid level once the unit has been operated for approximately 1 minute.

Purging will be required. Refer to the purging procedures on Page 12.

FLUID CHANGE

FLUID CHANGE PROCEDURE

This transaxle is factory filled, sealed and does not require oil maintenance. However, in the event of oil contamination or degradation, oil addition or change may alleviate certain performance problems.

1. Remove the transaxle from the vehicle.

NOTE: If removing the wheel from the transaxle, do so by removing the four (4) lug nuts. Do not remove the axle/hub nut.

2. Clean the oil fill port area of any debris.
3. Remove the oil fill port fitting.
4. Position the transaxle so the oil will drain completely out of the housing.
5. Fill the transaxle at the oil fill port according to Figure 4.
6. Install the oil fill port fitting.
7. Purging will be required. Refer to the purging procedures on Page 12.
8. Recheck the fluid level once the unit has been operated for approximately 1 minute.

Table 6. Fluid Volumes for the EZT®

Series	Fluid Description	Volume
ZT-2100	20W50 engine oil	54 fl. oz. / 1.687 qt. (1597 ml)
ZT-2200 (EZT®)	20W50 engine oil	56 fl. oz. / 1.75 qt. (1650 ml)

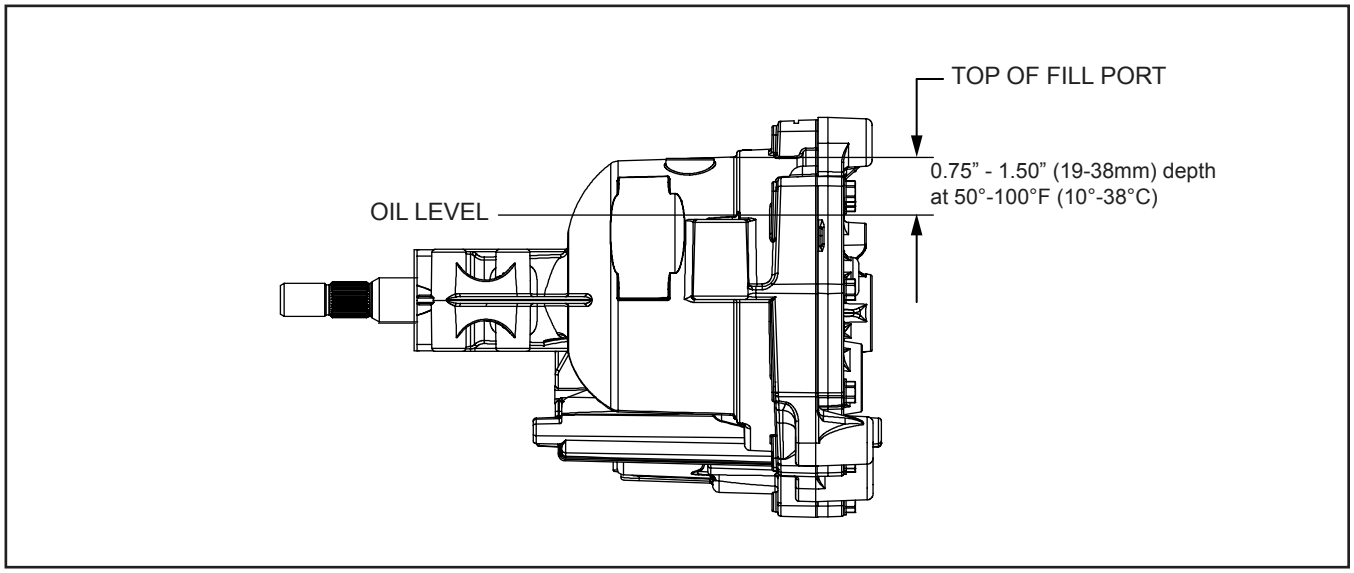

Figure 4. Fluid Level and Fill Port

PURGING PROCEDURES

Due to the effects air has on efficiency in hydrostatic drive applications, it is critical that it is purged from the system.

These purge procedures should be implemented any time a hydrostatic system has been opened to facilitate maintenance or any additional oil has been added to the system.

Air creates inefficiency because its compression and expansion rate is higher than that of the oil approved for use in hydrostatic drive systems.

The resulting symptoms in hydrostatic systems may be:

1. Noisy operation.
2. Lack of power or drive after short term operation.
3. High operation temperature and excessive expansion of oil.

Before starting, make sure the transaxle/transmission is at the proper oil level. If it is not, fill to the specifications outlined on Page 11, Figure 4.

The following procedures should be performed with the vehicle drive wheels off the ground, then repeated under normal operating conditions.

1. With the bypass valve open and the engine running, slowly move the directional control in both forward and reverse directions (5 or 6 times), as air is purged from the unit, the oil level will drop.
2. With the bypass valve closed and the engine running, slowly move the directional control in both forward and reverse directions (5 to 6 times). Check the oil level, and add oil as required after stopping the engine.
3. It may be necessary to repeat Steps 1 and 2 until all the air is completely purged from the system. When the transaxle moves forward and reverse at normal speed purging is complete.

RETURN TO NEUTRAL SETTING

WARNING

POTENTIAL FOR SERIOUS INJURY

Inattention to proper safety, operation, or maintenance procedures could result in personal injury, or damage to the equipment. Before servicing or repairing the ZT-2100 and ZT-2200 (EZT®), fully read and understand the safety precautions described in this section.

WARNING

Do not attempt any servicing or adjustments with the engine running. Use extreme caution while inspecting the drive belt assembly and all vehicle linkage!

Follow all safety procedures outlined in the vehicle owner's manual.

The return to neutral mechanism on the transmission is designed to set the directional control into a neutral position when the operator releases the vehicle hand control. Follow the procedures below to properly adjust the return to neutral mechanism on the transaxle:

1. Confirm the transaxle is in the operating mode (bypass disengaged). Raise the vehicle's drive tires off the ground to allow free rotation.

NOTE: It may be necessary to remove the drive wheel from the axle hub to access the linkage control and the transaxle return arm. Remove the wheel by removing the four (4) lug nuts. Do not remove the axle/hub nut.

2. Remove the Original Equipment Manufacturer's (OEM's) control linkage at the control arm. Refer to Figure 5.

3. Start the engine and increase the throttle to full engine speed.

4. Check for axle rotation. If the axle does not rotate, go to Step 5. If the axle rotates, go to Step 6.

5. Stop the vehicle's engine. Reattach and adjust the OEM linkage according to Step 3 and Step 4. Stop the vehicle engine. Refer to Figure 5.

6. Note the axle directional movement. Stop the vehicle engine. Loosen the RTN adjustment screw until the control arm can be rotated. Rotate the control arm in the opposite direction of the wheel rotation in 5 degree increments. Tighten the RTN adjustment screw. Refer to table 8. Required Torque values, page 15. Recheck according to steps 3 and 4. Stop the vehicle engine. Reattach and adjust the OEM linkage according to the OEM manual. Recheck according to steps 3 and 4. Refer to Figure 5.

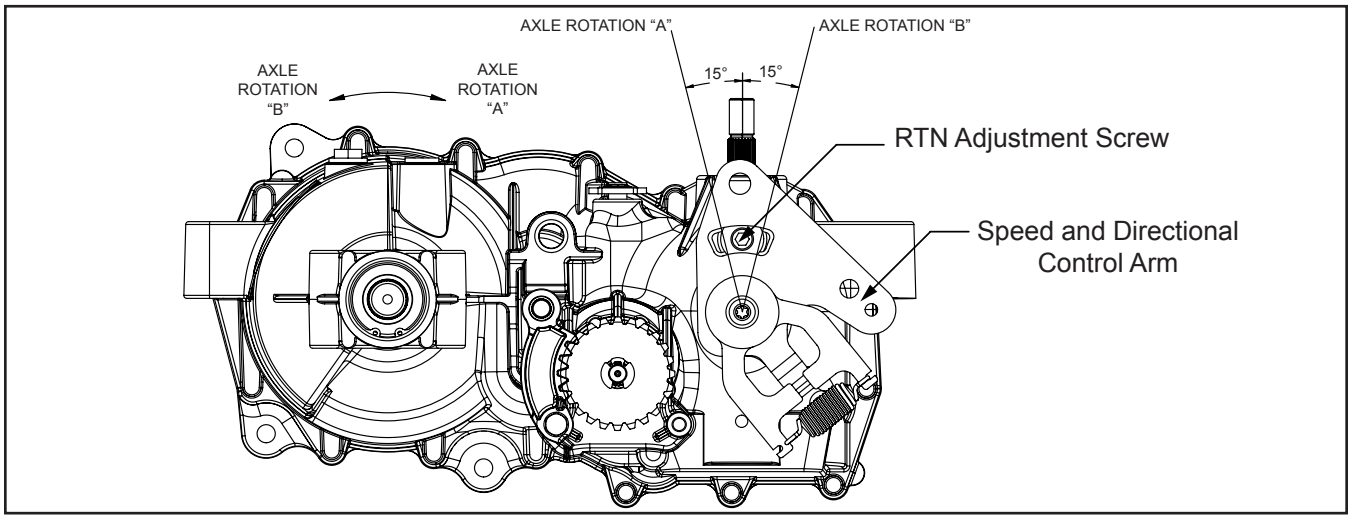

Figure 5. Return to Neutral Setting

HOW TO USE THIS MANUAL

Each subassembly illustrated in this section is illustrated with an exploded view showing the parts involved. The **item reference numbers in each illustration are for assembly instructions only.** See page 33 for part names and descriptions. A complete exploded view and item list of the transaxle is provided at the end of the repair section.

GENERAL INSTRUCTIONS

Cleanliness is a primary means of assuring satisfactory life on repaired units. Thoroughly clean all exposed surfaces prior to any type of maintenance. Cleaning of all parts by using a solvent wash and air drying is usually adequate. As with any precision equipment, all parts must be kept free of foreign material and chemicals.

Protect all exposed sealing surfaces and open cavities from damage and foreign material. The external surfaces should be cleaned before beginning any repairs.

Upon removal, it is recommended that all seals, O-rings, and gaskets be replaced. During installation lightly lubricate all seals, O-rings and gaskets with a clean petroleum jelly prior to assembly. Also protect the inner diameter of seals by covering the shaft with a cellophane (plastic wrap, etc.) material.

Parts requiring replacement must be replaced from the appropriate kits identified in the Items Listing, found at the end of this manual. Use only original Hydro-Gear® replacement parts found at the Hydro-Gear website (www.hydro-gear.com).

IMPORTANT: When internal repairs are performed on the hydraulic portion of the ZT-2200 (EZT®) , the filter assembly must be cleaned.

TRANSAXLE REMOVAL

It is necessary to remove the transaxle from the vehicle before performing the repair procedures presented in this section.

NOTE: If removing the wheel from the transaxle, do so by removing the four (4) lug nuts. Do not remove the axle/hub nut.

LIMITED DISASSEMBLY

The following procedures are presented in the order in which they must be performed to completely disassemble the unit. Do not disassemble the unit any farther than is necessary to accomplish the required repairs. Each disassembly procedure is followed by a corresponding assembly procedure.

Reassembly is accomplished by performing the “Assembly” portions of the procedures. If the unit has been completely disassembled, a summary of the assembly procedures, in the order in which they should occur, is given on page 30.

Note: “Any and all Hydro-Gear components removed and replaced during service are recyclable.”

TOOLS AND TORQUES

Table 7. Required Tools

Miscellaneous	**Sockets**
Service & Repair Manual	1/2”-3/8” Adapter
Flat Blade Screw Driver (2)	3/8” Deep
Torque Wrench	1/2” Deep
Air Impact Wrench	7/16” Deep
Rubber Mallet	9/16” Deep
Breaker Bar	3/4” Deep
Side Cutters/Snips	13/16” Deep
Pliers	7/8”
Needle Nose	T-25 Torx Head
Large External Snap Ring	T-40 Torx Head
Small Internal Snap Ring	Apex AN-08

Table 8. Required Torque Values

Operation	**Torque**	**Item**	**Description**
Metal Plug	180-240 lb-in [20-27 Nm]	7	Plug 9/16-18
Side Housing Screws	105-155 lb-in [12-17 Nm]	9	Screw 1/4-20 x 1.25
Center Section Bolts	450-550 lb-in [50-62 Nm]	12	Screw 3/8-24 x 2.5
Control Arm Stop Stud	125-160 lb-in [14-18 Nm]	21	Stud 5/16-24
Control Arm Screw	230-310 lb-in [26-35 Nm]	25	Screw 5/16-24 x 1
Stop Stud Nut	85-120 lb-in [10-14 Nm]	26	Nut, Lock 5/16-24 UNF
Check Plugs	280-400 lb-in [32-45 Nm]	56	Check Plug Assembly
Expansion Plate Screws	25-50 lb-in [3-6 Nm]	65	Screw 10-32 x 0.50
Brake Assembly Screw	80-120 lb-in [9-14 Nm]	73	Screw 1/4-20 x 1
Hub Locknut	240-260 lb-ft [271-298 Nm]	99	Nut, Hex 3/4-16 Lock
Fan/Pulley Lock Nut	540-660 lb-in [61-75 Nm]	122	Patch Lock Nut 1/2 x 20
Breather Fitting	180-240 lb-in [20-27 Nm]	126	Fitting 9/16
RTN Adjustment Screw	175-200 lb-in [19-22 Nm]	131	Screw 5/16-24 x 1
Disc Brake Screw	80-120 lb-in [9-14 Nm]	157	Screw 1/4-20 x 2

WHEEL HUB AND NUT (CODE - A, C, F, or H)

Character 4 in the model number code = A, C, F, or H

EXAMPLE: Z***-*H****-****-****

Refer to Figure 6.

Disassembly

NOTE: This procedure is only necessary if your unit is equipped with a pin locking nut (Figure 6a). Other units under this code are not equipped with a pin locking nut.

1. Place the axle so that the pin lock is at the 9 o'clock position.
2. Place a punch on the pin lock of the nut (99).
3. Tap on the end of the punch with a rubber mallet until the pin lock moves off of the shaft.
4. Remove and discard the pin locking nut.
5. Remove the hub (124).

Inspection

1. Inspect the hub and axle splines for any damage.

Assembly

NOTE: Anytime a hub and/or hub nut is removed, it must be replaced with a new hub and/or hub nut.

1. Install hub (124) onto the shaft.
2. Install nut (99) onto shaft. Torque according to specifications in Table 8 on page 15.

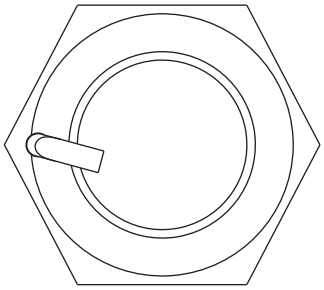

Figure 6a. Pin locking nut.

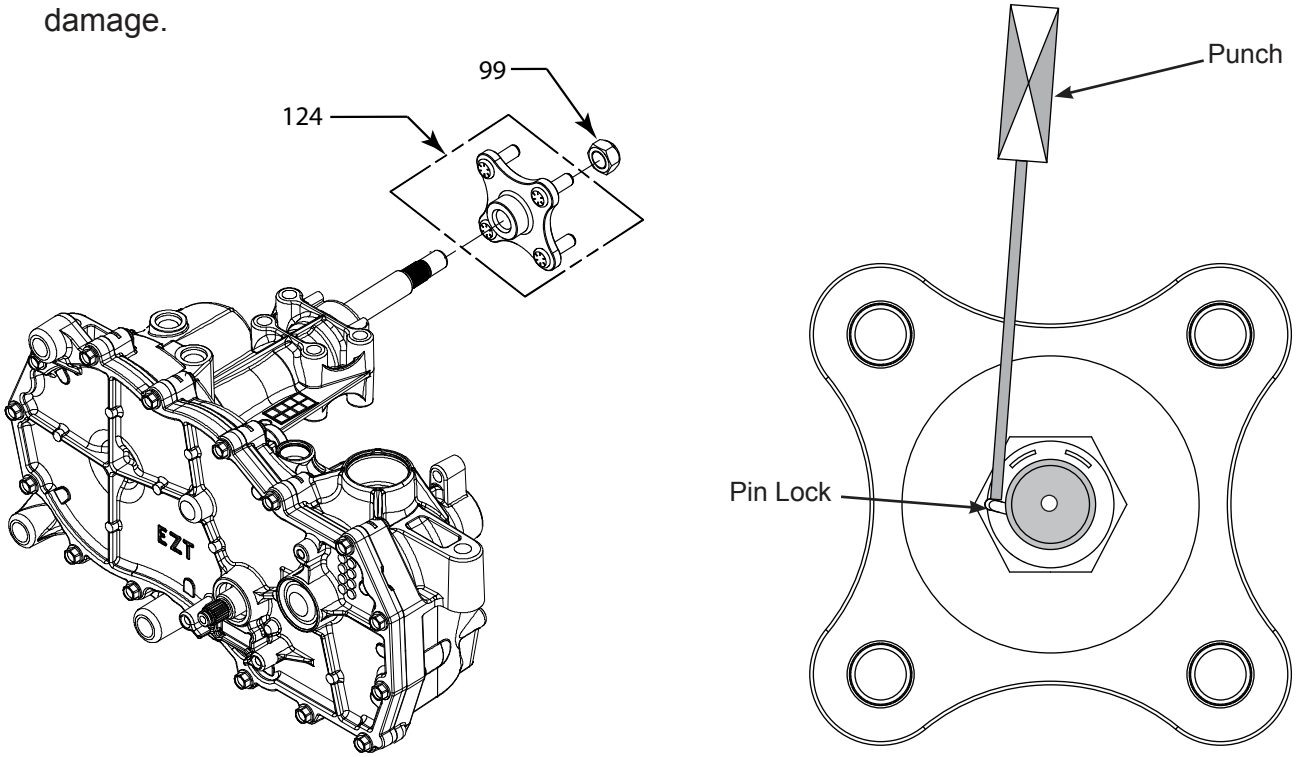

Figure 6b. Pin locking nut removal.

WHEEL HUB AND NUT (CODE - P, R, T, or U)

Character 4 in the model number code = P, R, T, or U

EXAMPLE: Z*-*P**-****-****

Refer to Figure 7.

Disassembly

NOTE: The following procedure is used for teardown of the ZT-2200 unit when assembled with a taper lock shaft. The hub and hub nut should not be removed unless they have been damaged.

1. Reference page 20 and 21 for side housing brake assembly removal.
2. Remove the side housing screws (9).
3. Remove side housing (68).
4. Remove axle retaining ring (45).
5. Remove bull gear (46).
6. Slide axle shaft and hub assembly out of main housing in the direction of the arrow (Figure 7).

Inspection

1. Inspect the components for damage.

Assembly

NOTE: In a situation that a hub and/or hub nut is damaged and must be removed it must be replaced with a new hub and/or hub nut.

1. Slide axle shaft assembly into axle horn of main housing (66).

NOTE: Cover the end of the axle shaft with cellophane to protect the seal during installation of the axle shaft assembly.

2. Install bull gear (46) and axle retaining ring (45).
3. Install side housing (66) and side housing screws (9). Refer to Table 8 for screw torque specifications.

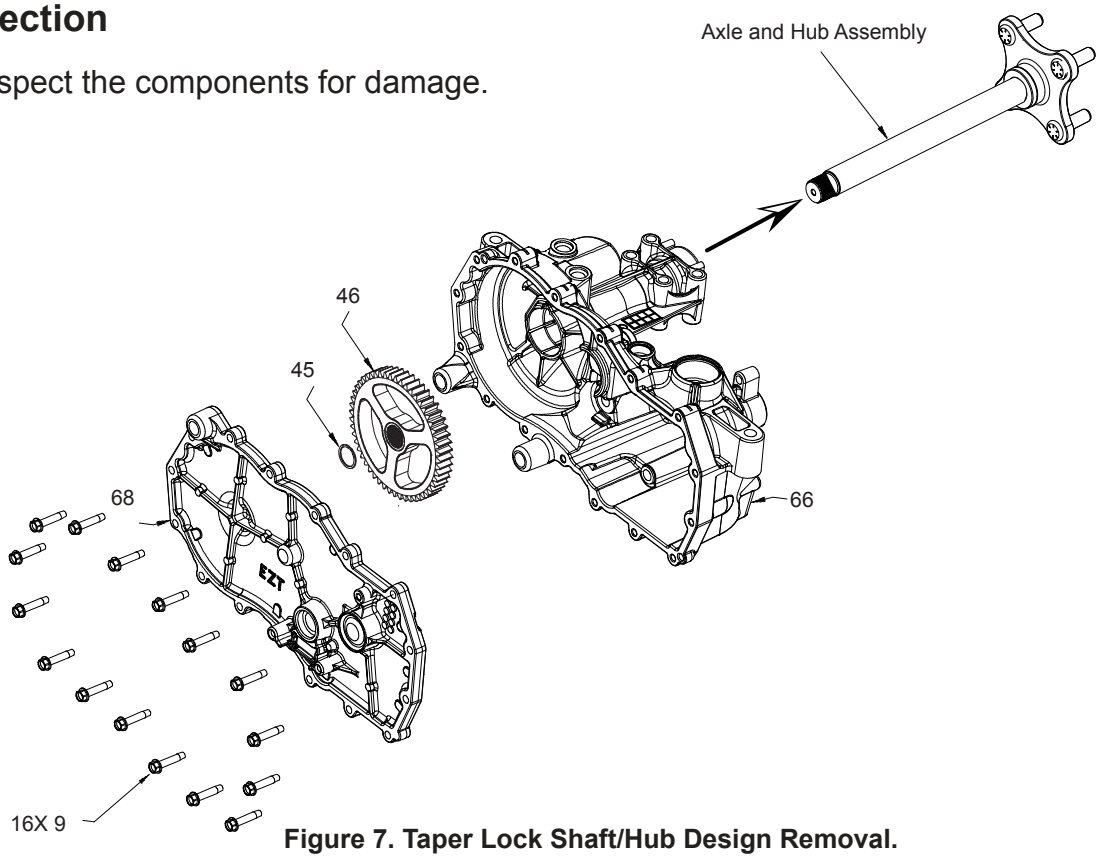

Figure 7. Taper Lock Shaft/Hub Design Removal.

CONTROL ARM AND BYPASS ARM

Refer to Figure 8.

Disassembly

1. Loosen and remove the lock nut (26) and flat washer (24). Discard the lock nut (26) and flat washer (24).
2. Remove the torx head screw (25) from the directional control and discard.
3. Remove control arm (23) and pucks (22). Discard the pucks.
4. Remove the bypass arm retaining ring (18) and bypass arm (17). Discard the retaining ring.
5. If necessary, remove and replace the control arm stop stud (21).

Inspection

1. Inspect the control arm stop stud (21) for wear or damage.
2. Inspect the control arm (23) for wear or damage.
3. Inspect the bypass arm (17) for wear or damage.

Assembly

1. Install the bypass arm (17) onto the bypass rod. Secure the bypass arm with a new retaining ring (18).
2. Replace the control arm stop stud (21) if removed. Torque according to specifications in Table 8 on page 15.
3. Install the control arm (23).
4. Install the new control arm screw (25). Refer to Table 8 for screw torque specifications.

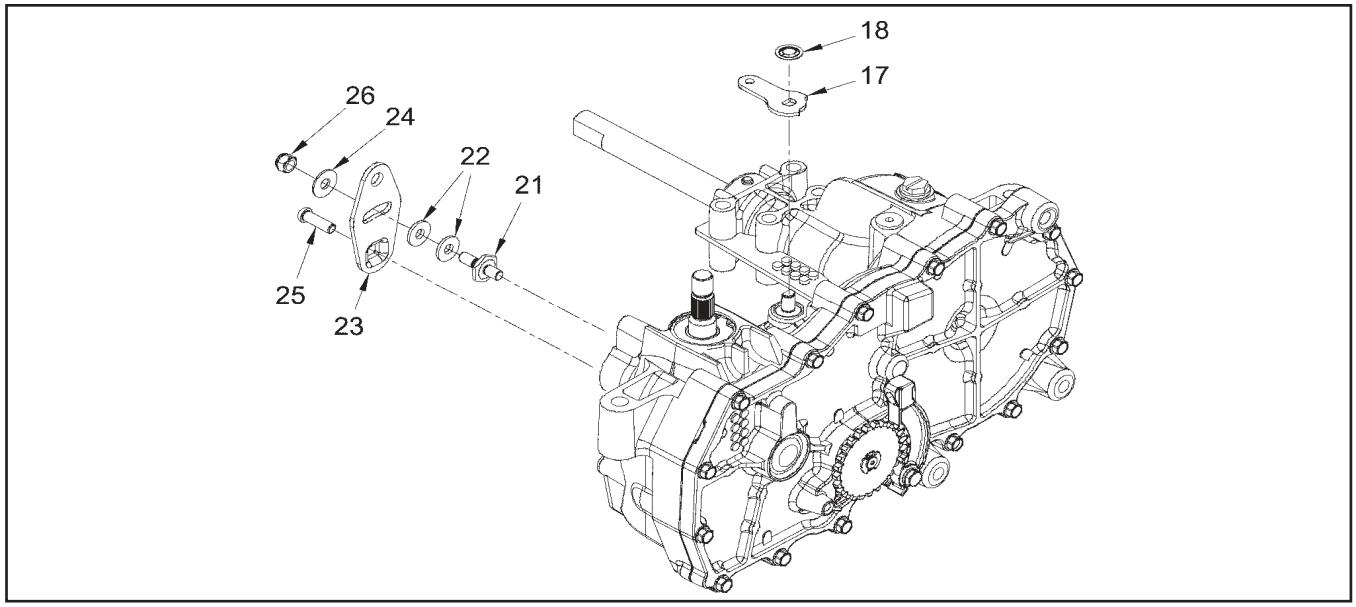

Figure 8. Control Arm and Bypass Arm

SEAL KIT REPLACEMENT

Before disassembly, wipe the unit free of any debris to avoid contamination.

Refer to Figure 9.

Input Seal

1. Remove the input pulley from the input shaft.
2. Remove the seal retaining ring (34).
3. Carefully pull the input seal (33) out of the housing bore with a “hook” type tool. Care must be taken to avoid damage to the housing bore or shaft sealing area.
4. Lubricate the new seal with petroleum jelly prior to installation.
5. Wrap the shaft keyway (splines) with cellophane to prevent damage to the seal lip during installation.
6. Slide the seal over the shaft and press it into the housing bore.
7. The seal should seat against the spacer.
8. Install the seal retaining ring (34) and make sure it is fully seated in its groove.

Output Seal

1. The seal (51) can be replaced by following steps 2-6 of the procedure used to replace the input seal.
2. Install the retaining ring (34) and make sure it is fully seated in its groove.

Motor Shaft Seal

1. Remove the brake assembly. See pages 20-21.
2. The seal (10) can be replaced by following steps 3-6 of the procedure used to replace the input shaft.

Trunnion Seal

1. Remove the control arm and any attachments to the control arm. See page 18.
2. The seal (20) can be replaced by following steps 3-6 of the procedure used to replace the input shaft.

Bypass Seal

1. Remove the bypass arm and any attachments to the bypass arm. See page 18.
2. Remove the seal retaining ring (16). Remove the bypass rod, keeping the retaining ring (14) attached. Remove the bypass rod seal (13). Deburr the bypass rod.
3. Install the seal (13). Install the bypass rod with the retaining ring (14) attached. Install the seal retaining ring (16).

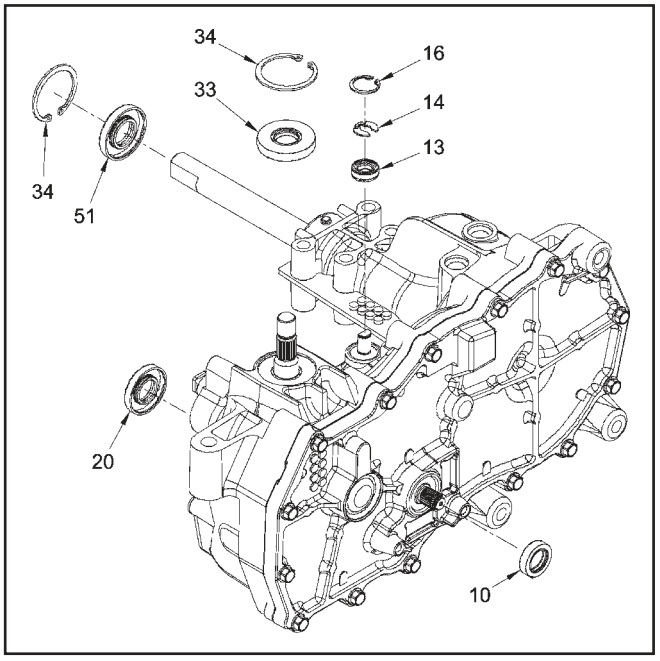

Figure 9. Seal Kit Replacement

COG BRAKE ASSEMBLY

Refer to Figure 10.

Disassembly

1. Remove the control arm and bypass arm. See page 18.
2. Remove the oil from the transaxle. See page 11.
3. Remove the brake arm spring (75), if installed. Remove the brake arm screw(s) (73), washer(s) (72), brake arm (74) and bushing(s) (71).
4. Remove the retaining ring (14) and cog brake disc (100).
5. Remove the motor shaft lip seal (10), if removing the side housing.

Inspection

1. Check the brake arm and cog brake disc for excessive wear or teeth damage. Replace if necessary.
2. Check for excessive looseness at the arm pivot point.

Assembly

1. Install the motor shaft lip seal (10), if removed. Refer to page 18. Remember to use a seal protector during installation.
2. Install the cog brake disc (100) and retaining ring (14).
3. Install the bushing(s) (71), brake arm (74), washer(s) (72) and brake arm screw(s) (73). Torque screws to 80-120 in-lbs (9-14 Nm).
4. Install the brake arm spring (75), if removed.
5. Fill the transaxle with new oil. See page 11.
6. Install the bypass arm and control arm. See page 18.

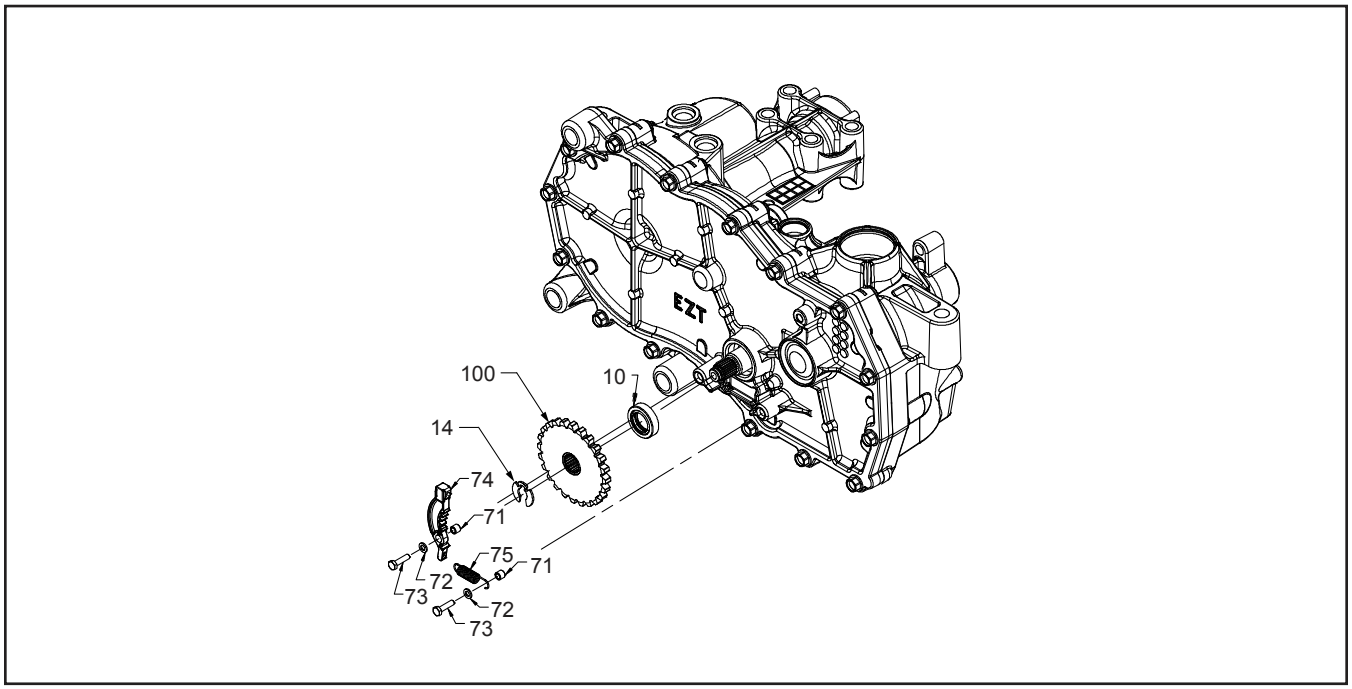

Figure 10. Cog Brake Assembly

DISC BRAKE ASSEMBLY

Refer to Figure 11.

Disassembly

1. Remove the control arm and bypass arm. See page 18.
2. Remove the oil from the transaxle. See page 11.
3. Remove the brake arm bias spring (75).
4. Remove the cotter pin (160), castle nut (159) and washer (158).
5. Remove the brake arm (74), compression spring (156) and two brake pins (155).
6. Remove the brake yoke assy screws (73 & 157), the spacer (154), brake yoke assy (153), puck plate (151), outer puck (150), rotor (100) and inner puck (150).
7. Remove the motor shaft lip seal (10), if removing the side housing.

Inspection

1. Check the brake disc and pucks for excessive wear. Replace if necessary.
2. Check for excessive looseness at the arm pivot point.

Assembly

1. Install the motor shaft lip seal (10), if removed. Refer to page 17. Remember to use a seal protector during installation.
2. Install the inner puck (150), rotor (100), outer puck (150) and puck plate (151).
3. Install the brake yoke assy (153), brake pins (155), spacer (154) and the brake yoke assy screws (73 & 157).
4. Install the compression spring (156), the brake arm (74), the washer (158), the castle nut (159) and the cotter pin (160).
5. Install the brake arm bias spring (75).
7. Fill the transaxle with new oil. See page 11.
8. Install the bypass arm and control arm. See page 18.

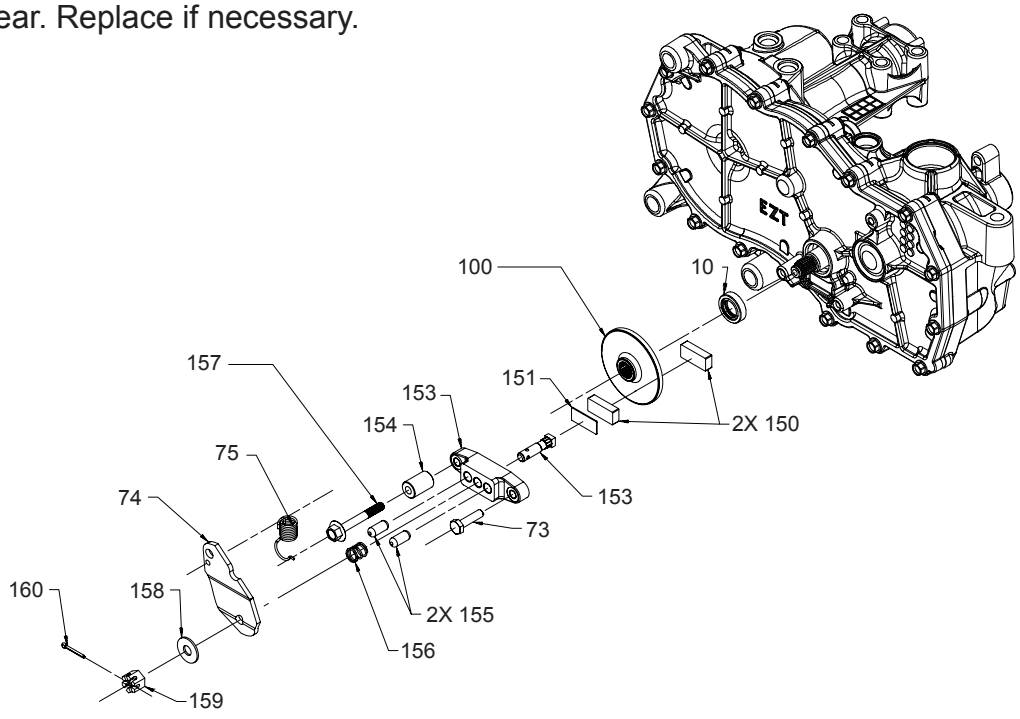

Figure 11. Disc Brake Assembly

SIDE COVER

Refer to figure 12.

Disassembly

1. Remove the control arm and bypass arm. See page 18.
2. Remove the oil from the transaxle. See page 11.
3. Remove the brake assembly. See pages 20 and 21.
4. Remove the motor shaft lip seal. See page 19.
5. Remove the side housing screws (9) and belt deflector (144), if installed.
6. Pull the side housing (68), leaving the axle (49) and bull gear (46) assembled in the main housing. It may be necessary to use pry tools at the pry points to break loose the sealant (positions 1-16 and 4-6, Figure 12).
7. Clean off all the old sealant on the side and main housings. Take care not to damage the sealing surfaces. A wire brush and solvent is effective.

Inspection

1. Inspect the bearing and bushing areas of the side cover.

Assembly

1. Apply a bead of sealant around the perimeter of the side housing face. See sealant pattern on page 31.
2. Install the locating pins (8), if not already installed.
3. Install the side housing (2). Use care not to smear the sealant bead.
4. Install the side housing screws (9) and belt deflector (144, if used). Refer to the screw tightening pattern in Figure 12 and torque specification in Table 8 on page 15.
5. Install the remaining seals. Refer to page 19. Remember to use a seal protector during installation.
6. Install the brake assembly. See pages 20 and 21.
7. Fill the transaxle with new oil. See page 11.
8. Install the bypass arm and control arm. See page 18.

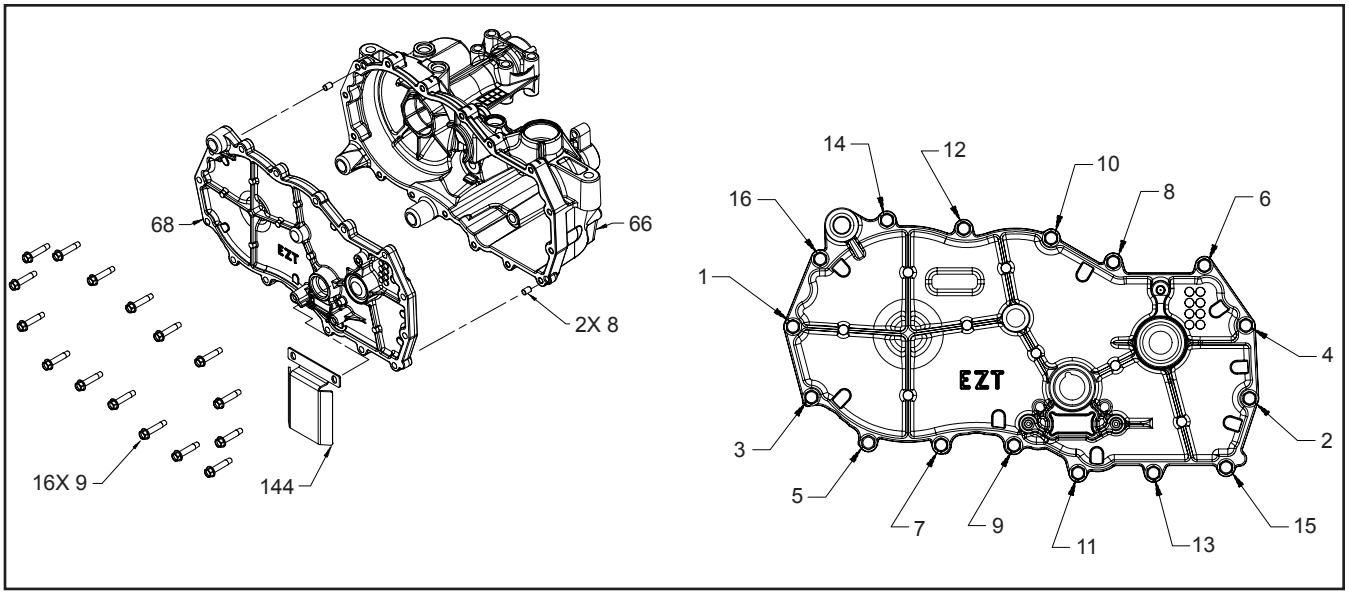

Figure 12. Side Cover

AXLE SHAFT, REDUCTION GEARS AND EXPANSION PLATE

Refer to Figure 13.

Disassembly

1. Remove the bypass arm and control arm. See page 18.
2. Remove oil from the transaxle. See page 11.
3. Remove the side cover. See page 22.
4. Remove the spiral retaining ring (45), bull gear (46), inboard sleeve bearing (48) and washer (47).
5. Remove the reduction gears (42 &43), jack shaft pin (44) and washers (41).
6. Remove seal retaining ring (34), seal (51), axle (49) and bushing (50).
7. If necessary, remove the expansion plate assembly (53).

NOTE: Expansion plate removal will typically destroy the plate. Clean all sealant from the expansion plate area.

Inspection

1. Inspect the bull gear for wear or damage.
2. Inspect the reduction gears, jack shaft pin and washers.
3. Inspect the axle shaft, bearing and bushing.
4. Inspect the expansion plate.

Assembly

1. Apply a small bead of sealant to the expansion plate area of the housing. See page 31. Install the expansion plate (53). Torque the screws according to Table 8.
2. Reassemble and install the reduction gears (42 & 43), jack shaft pin (44) and washers (41).
3. Install the bull gear (46), retaining ring (45), bearing (48) and washer (47) onto the axle (49).
4. Install the axle (49) and bushing (50) into the housing (1).
5. Install the axle seal (51) and retaining ring (34).
6. Install the side cover. See page 22.
7. Install all remaining seals. See page 19.
8. Fill the transaxle with oil. See page 11.
9. Install the bypass arm and control arm. See page 18.

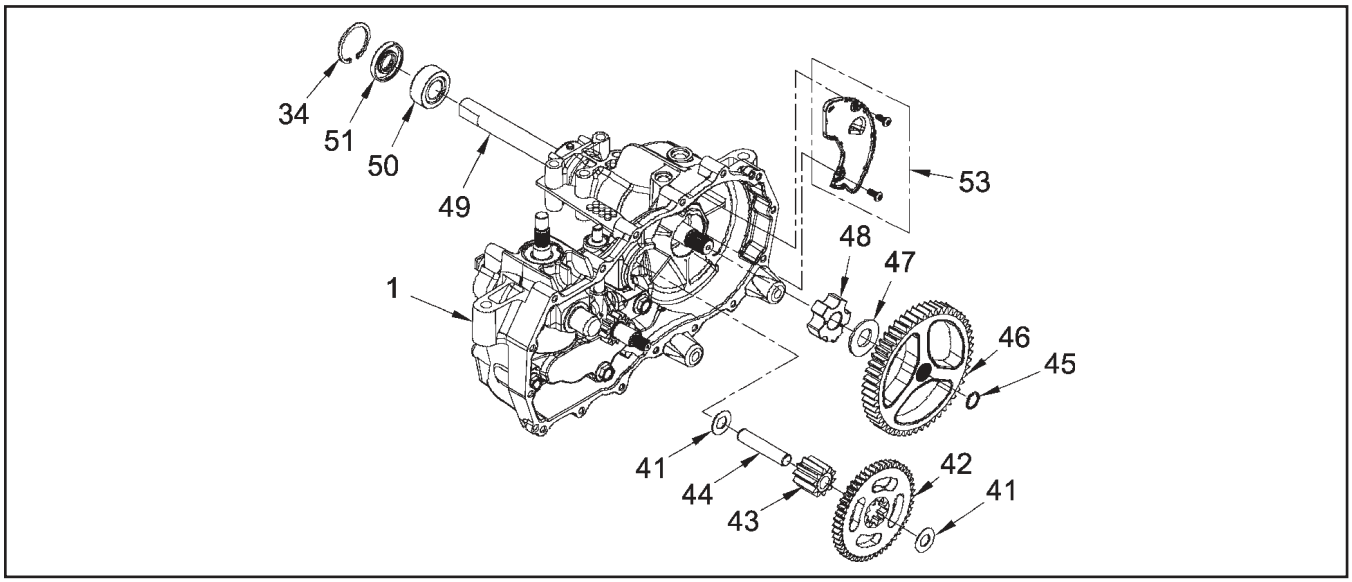

Figure 13. Axle Shaft, Reduction Gears and Expansion Plate

MOTOR SHAFT

Refer to Figure 14.

Disassembly

1. Remove the control arm and bypass arm. See page 18.
2. Drain the oil from the transaxle. See page 11.
3. Remove the side cover. See page 22.
4. Remove the reduction gears. See page 23.
5. Remove flat washer (36), motor shaft and pinion gear (39 & 38) and flat washer (40).

Inspection

1. Inspect the motor shaft (39), pinnion gear (38) and flat washers (36 & 40) for wear or damage.

Assembly

1. Insert the motor shaft (39) with the pinnion gear (38) and flat washers (36 & 40) into the center section (57).
2. Install the reduction gears. See page 23.
3. Install the side cover. Refer to page 22.
4. Install new seals. Refer to page 19.
5. Fill the transaxle with oil. See page 11.
6. Install the bypass arm and control arm. See page 18.

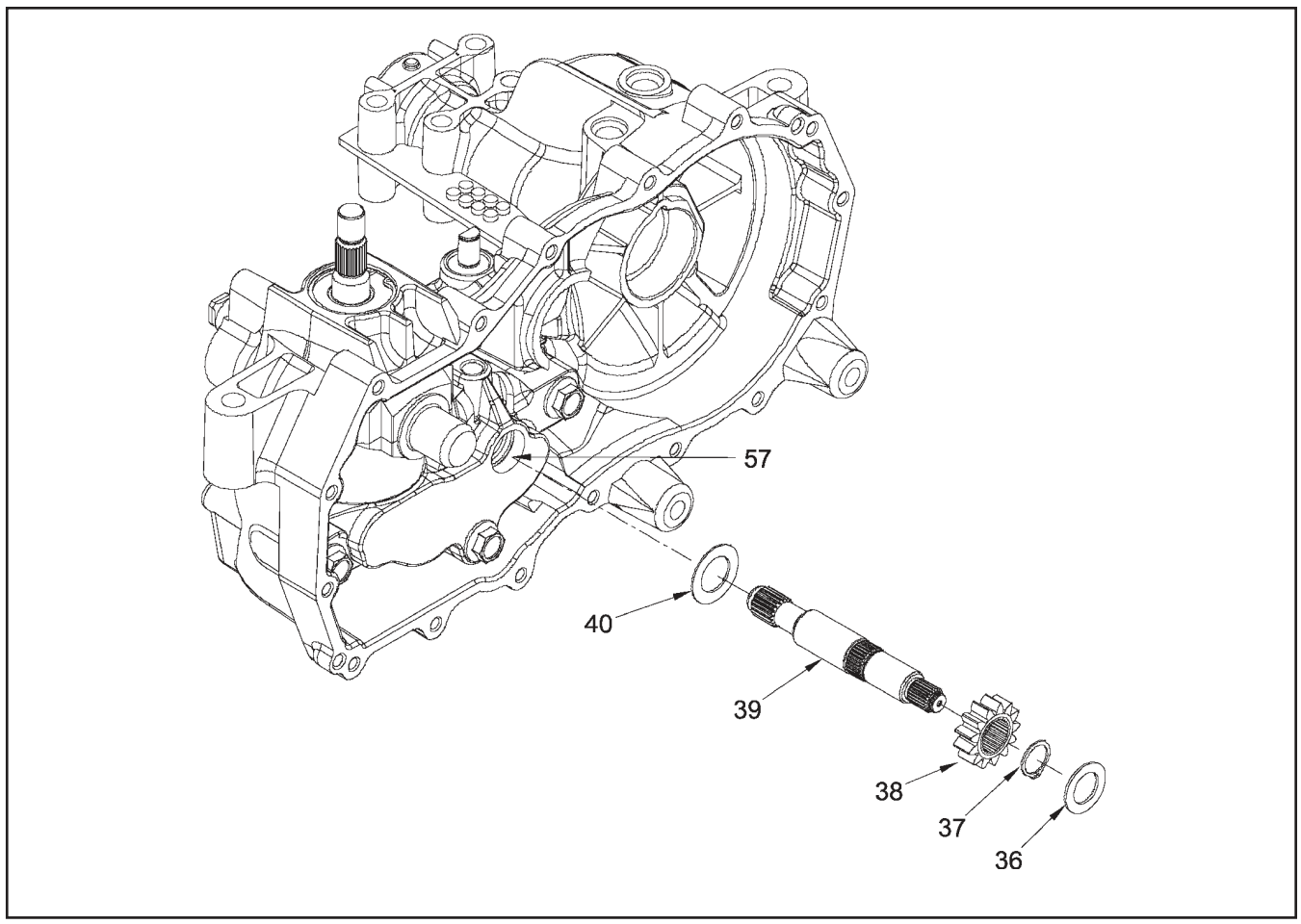

Figure 14. Motor Shaft

INPUT SHAFT AND BYPASS ROD

Refer to Figure 15.

Disassembly

1. Remove the control arm and bypass arm. See page 18.
2. Drain the oil from the transaxle. See page 11.
3. Remove the side cover. See page 22.
4. Remove the reduction gears. See page 23.
5. Remove the motor shaft. See page 24.
6. Remove the retaining ring (34) and shaft seal (33). Discard the seal.
7. Remove the spacer (32) and input shaft assembly (29, 30 & 31).
8. Remove the compression spring (27) and washer (28).
9. Remove the rings (14 & 16), bypass rod (15) and seal (13).

Inspection

1. Inspect the input shaft components and bypass rod for wear or damage.

Assembly

1. Visually ensure that the pump block is aligned concentrically with the center section running face.
2. Install the compression spring (27) and washer (28).
3. Insert the input shaft (29), with bearing (30) and retaining ring (31), into the pump block assembly. NOTE: Do not force the shaft and bearing as damage may occur. If alignment is correct, the shaft assembly will fit into place.
4. Install the washer (32), seal (33) and retaining ring (34). Use a seal protector when installing the input shaft seal.
5. Deburr the end of the bypass rod. Install the bypass rod (15), retaining ring (14), seal (13) and retaining ring (16).
6. Install the motor shaft. See page 24.
7. Install the reduction gears. See page 23.
8. Install the side cover. See page 22.
9. Install new seals in the side housing. See page 19.
10. Fill the transaxle with oil. See page 11.
11. Install the bypass arm and control arm. See page 18.

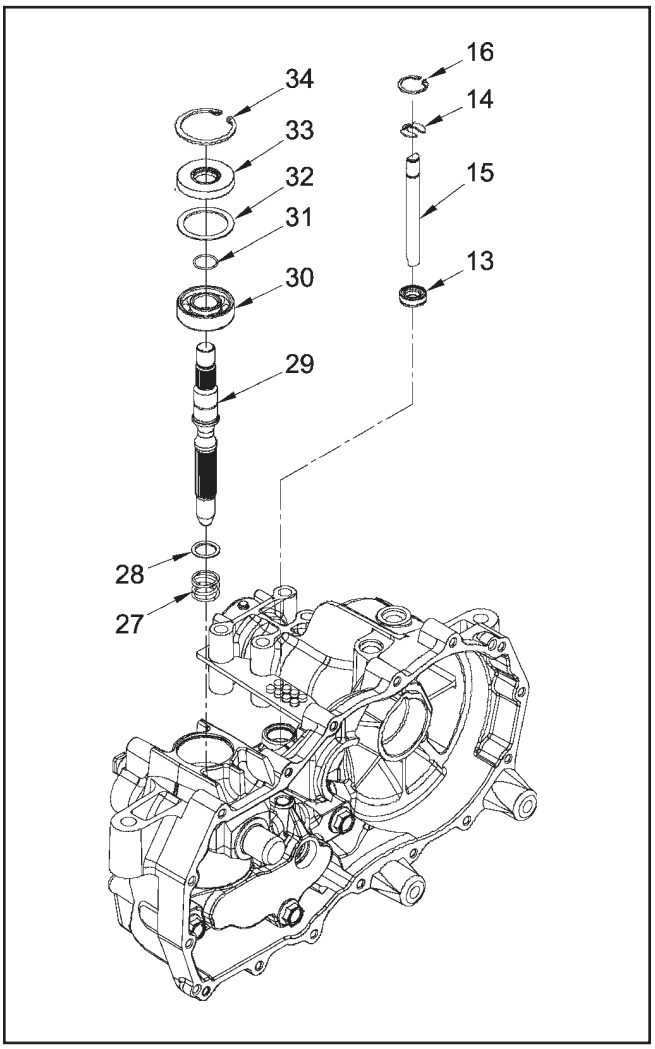

Figure 15. Input Shaft and Bypass Rod Assembly

HYDRAULIC COMPONENTS

Refer to Figures 16-25.

Disassembly

1. Remove the bypass arm and control arm. See page 18.
2. Drain the oil from the transaxle. See page 11.
3. Remove the side cover. See page 22.
4. Remove the reduction gears. See page 23.
5. Remove the motor shaft. See page 24.
6. Remove the input shaft and bypass rod. See page 25.
7. **(See Figure 16)** Remove the swashplate (19) and pump cylinder block (4) as one assembly. NOTE: Removal will be aided by applying a small amount of pressure on the trunnion mounted swashplate towards the center section. Also note that the control arm (23, page 18) may be loosely assembled at this point to assist in swashplate removal. While gently removing the swashplate and block assembly, keep the block face flush with the center section to minimize damage to the running surface.
8. **(See Figure 17)** Disassemble the pump cylinder block (4) from the swashplate (19).
9. **(See Figure 18)** Check each piston for proper operation by pressing the pistons in and releasing them in the block bore. Disassemble the pump cylinder block. Check for piston/block wear in the cylinder bore. Inspect the pistons (A), piston springs (C) and thrust washers (B) for excessive wear or damage. NOTE: Thrust washers may be held in place in the piston by residual oil.
10. Reassemble the pistons, springs and washers into the cylinder block and set aside.
11. **(See Figure 19)** Remove the thrust bearing assembly (35) from the swashplate (19).

(Center Section/Filter)

12. **(See Figure 20)** Remove the center section mounting screws (12). NOTE: The center section is under motor block piston spring pressure. These screws are factory installed to 700 lb-in (80 Nm) and use an anaerobic thread adhesive. A breaker bar will be required at this step. Clean the internal threads of the mounting holes with compressed air.
13. Remove the center section and filter assembly (57, Figure 21). NOTE: Bypass plate (Figure 22) may slide out of the center section.
14. Remove the filter cover by pressing in and down on the filter cover tabs. Discard the cover.
15. Note the location of both check plugs (56) before removal for correct replacement during reassembly. Remove and inspect the check plug assemblies (56) for debris or damage.
16. Remove the filter base (61) and discard it. NOTE: The filter base is included in the filter kit to be installed during reassembly of the unit.

(Motor Block)

17. **(See Figure 23)** Remove the motor cylinder block assembly (6) from the housing (1).
18. Disassemble the motor cylinder block assembly (4). Check each piston for proper operation by pressing the pistons in and releasing them in the block bore. Disassemble the motor cylinder block. Check for piston/block wear in the cylinder bore. Inspect the pistons, piston springs and thrust washers for excessive wear or damage. NOTE: Thrust washers may be held in place in the piston by residual oil.

19. Reassemble the pistons, springs and thrust washers into the cylinder block and set aside.

20. Remove the thrust bearing assembly (35) from the housing (1). Inspect the thrust bearing and thrust bearing cavity in the housing.

Inspection

1. Inspect the pump cylinder block running surface for wear or damage.

2. Inspect the swashplate and thrust bearing assemblies for wear or damage.

3. Inspect the center section block running surfaces. NOTE: These “sealing” surfaces should be smooth in appearance without scratches, scoring, nicks or abrasions. Drag a fingernail across the surface to detect uneven wear or scratches which may not be visible.

4. Inspect the threaded check plug ports of the center section for debris or damage.

5. Inspect the motor cylinder block running surface for damage and wear.

6. Inspect all bearing, bushing and wear areas in the housing.

Assembly

(Motor Block)

1. **(See Figure 23)** Turn the housing (1) so the motor thrust bearing cavity is facing up. This will assist in the installation of the motor thrust bearing assembly (35) keeping it in the bearing cavity during installation of the center section assembly (57, Figure 21).

2. Insert the thrust bearing (35) in the housing (1). NOTE: Place the thin race of the bearing towards the housing bearing cavity. The thick race must face the pistons.

(Center Section/Filter)

3. **(See Figure 22)** Install the new filter base (61) onto the center section (57).

4. It will be necessary to clean the check plugs prior to re-assembly. Install the check plugs (56), in their correct location, into the center section (57). Tighten the check plugs according to Table 8.

5. Align the tabs on the filter cover with the slots in the filter base and carfully press the cover onto the base until the tabs snap into place. Insure the bypass plate (Figure 21) is located properly in the center section.

6. **(See Figures 14 & 24)** Install the motor shaft (39), pinion gear (38) and flat washers (36 & 40) into the center section (57).

7. Assemble the motor block assembly (6) onto the motor shaft (39).

8. **(See Figure 22)** Install the motor shaft, center section and motor block assembly into the housing so that the motor block pistons contact the thrust bearing race. NOTE: Hold in place and insure all pistons are still positioned correctly in the cylinder bore by confirming spring bias against the center section.

9. **(See Figure 20)** After applying thread adhesive, insert the center section mounting screws (12) while holding downward pressure on the center section assembly (57, Figure 21).

10. Tighten the center section mounting screws (12) to the proper torque. Refer to Table 8. NOTE: The center section must be fully seated into the pilot bore before the screws are tightened. The center section will <u>not</u> self locate.

(Swashplate/Pump Block)

11. **(See Figure 19)** Install the pump thrust bearing (35) in the trunnion machined swashplate (19). NOTE: Place the thin race of the bearing towards the swashplate. The thick race must face the pistons.

12. **(See Figure 17)** Place the pump block assembly (4), pistons down, on top of the thrust bearing in the swashplate (19).

13. Coat the pump running surface with clean motor oil.

14. *Care must be taken to prevent the scaring or scratching of the center section sealing face during this step.* Insert the shaft of the swashplate/pump block assembly (Figure 24) into the housing while simultaneously compressing the pistons in the block. NOTE: To assist in the installation of these components, insert the assembly until 3/4 of the pump block is covered by the center section. Then slightly press the shaft end toward the center section while pushing the shaft into its bore.

15. Install the input shaft and bypass rod. See page 25.

16. Install the axle shaft, reduction gears and expansion plate, if removed. Refer to page 23.

17. Install the side cover and brake. See pages 20-22.

18. Fill the transaxle with new oil. See page 11.

19. Install the bypass arm and control arm. See page 18.

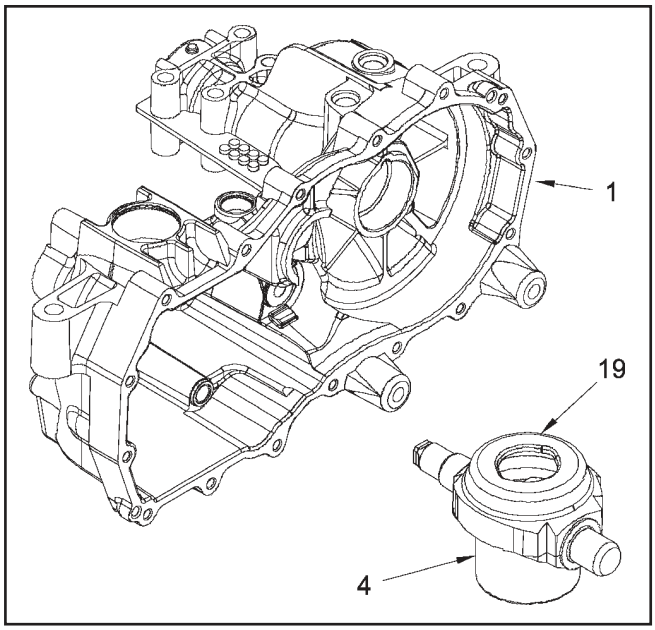

Figure 16.

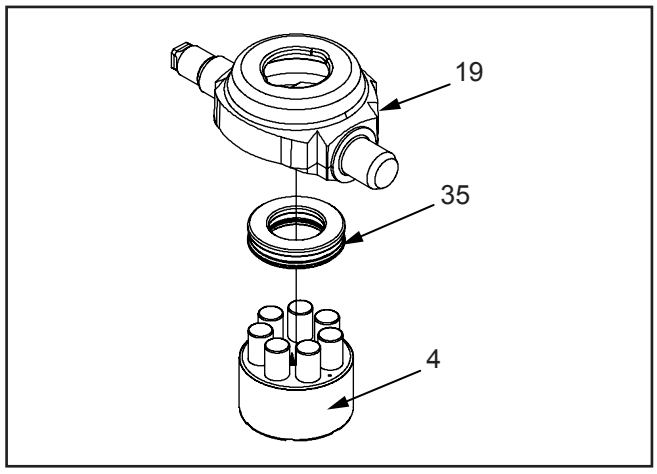

Figure 17.

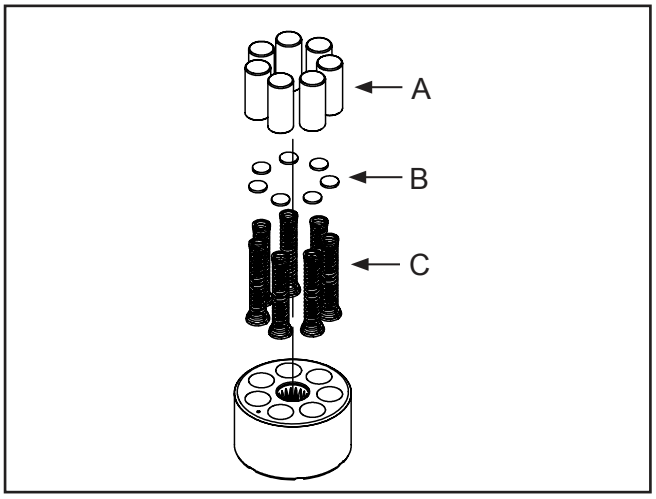

Figure 18

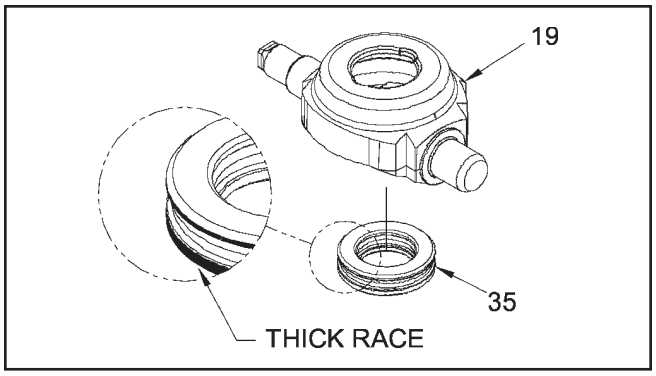

Figure 19.

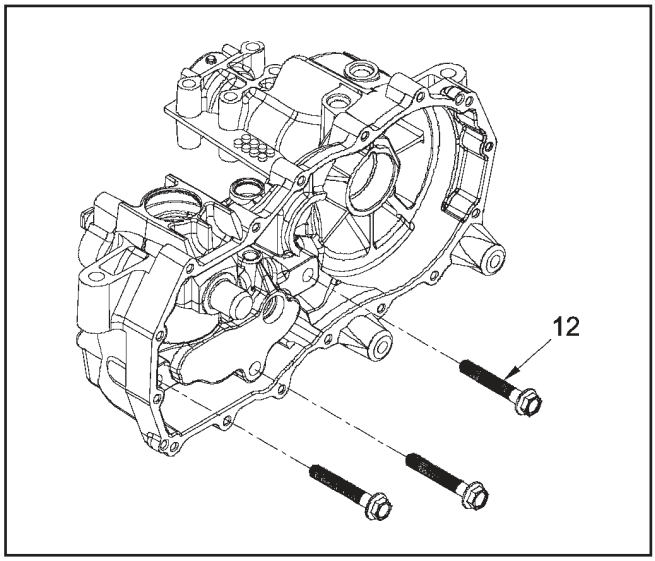

Figure 20.

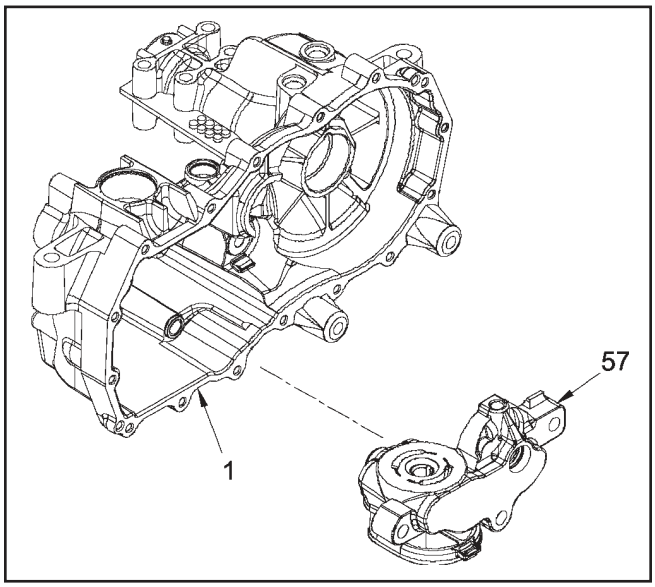

Figure 21.

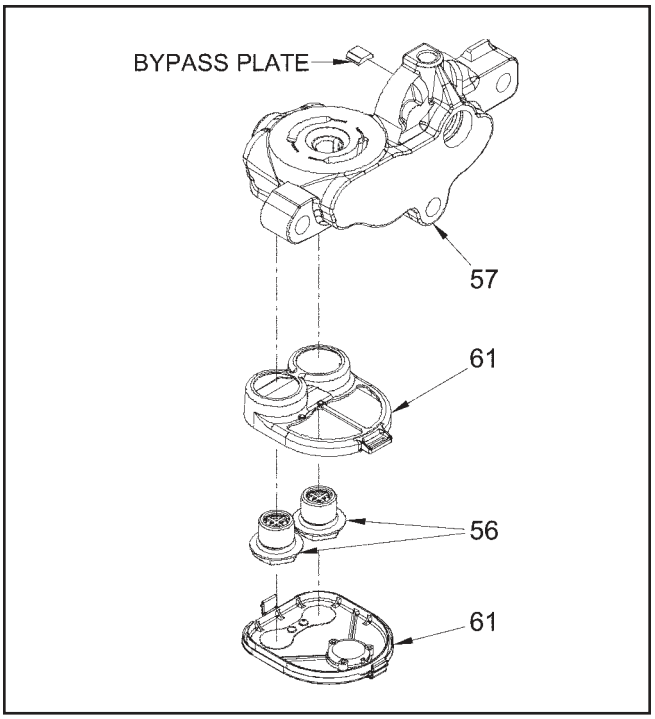

Figure 22.

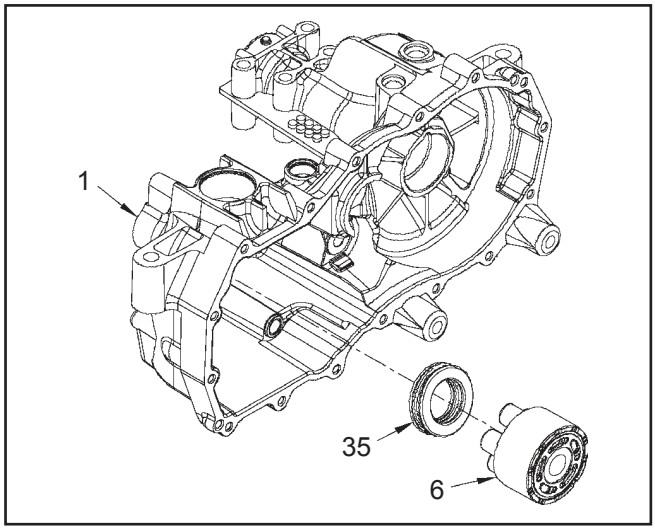

Figure 23.

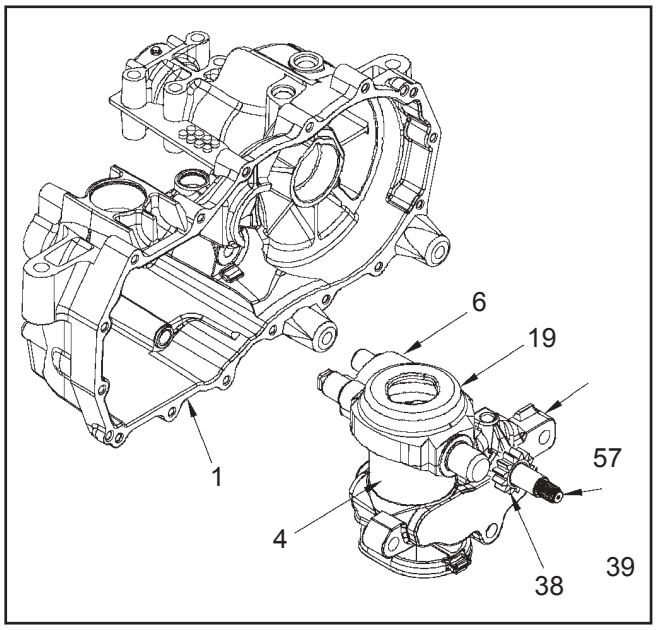

Figure 24.

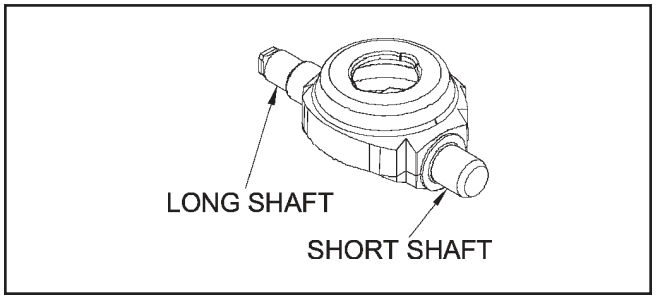

Figure 25.

TRANSAXLE INSTALLATION

Use the following procedure to complete the installation of the transaxle on the vehicle.

1. Install and secure the transaxle on the vehicle according to the instructions in the vehicle owner's manual.
2. With the vehicle raised, install the wheels on the axles, and snug the wheel hardware.
3. Lower the vehicle wheels to the ground and torque the wheel hardware per the vehicle owner's manual.

ASSEMBLY AFTER A COMPLETE TEARDOWN

If the unit has been torn down completely, the following summary identifies the assembly procedures necessary to completely assemble the unit. Each assembly procedure is located by a page reference.

The part reference numbers provided in each assembly procedure are keyed to the individual exploded views, and are also keyed to the complete unit exploded view on page 32.

1. Install the hydraulic components. See pages 26-30.
2. Install the input shaft and bypass rod. See page 25.
3. Install the axle shaft, reduction gears and expansion plate. See page 23.
4. Install the cog brake and side cover. See page 20-22.
5. Fill the transaxle with new oil. See page 11.
6. Install the bypass arm and control arm. See page 18.
7. Install the transaxle onto the vehicle.
8. Perform the purge procedures listed on page 12.

SEALANT APPLICATION

NOTE: Prior to applying the new sealant, the old sealant must be removed from all surfaces.

A small consistent bead of the sealant around the housing face will be sufficient. Use sparingly.

The illustration below indicates the correct areas.

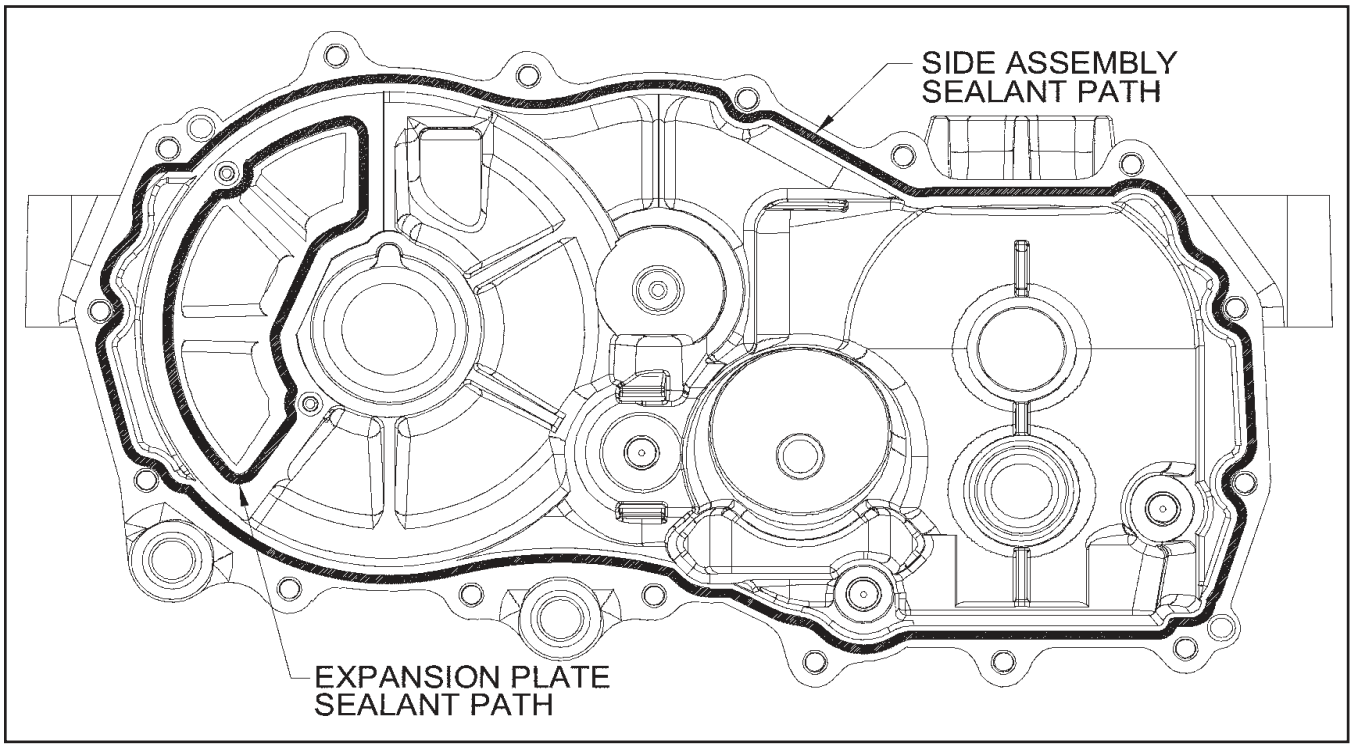

ZT-2200 (EZT®) EXPLODED VIEW

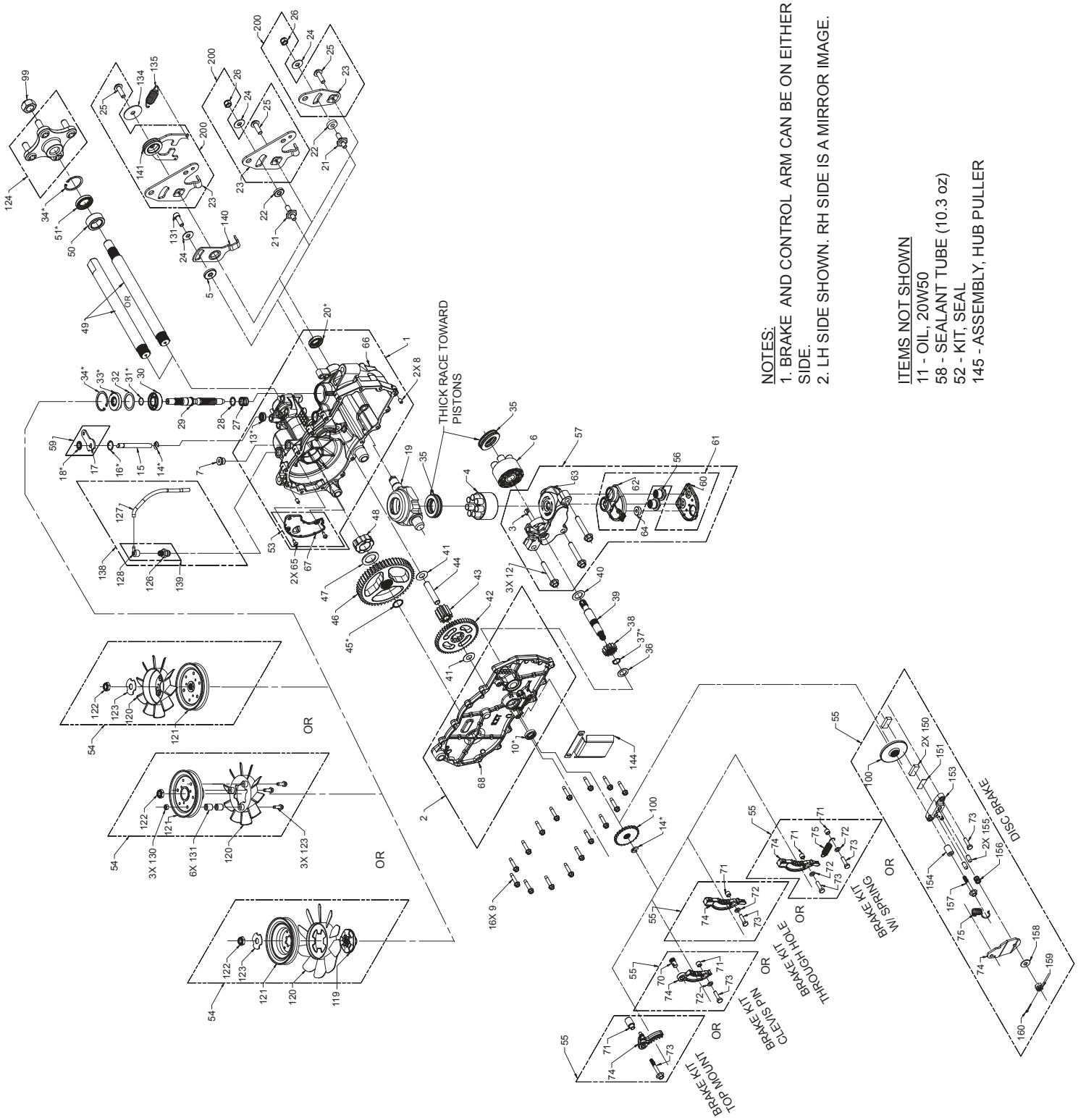

Figure 26. EZT®

ZT-2200 (EZT®) ITEMS LIST

No.	DESCRIPTION
1	ASSEMBLY, MAIN HOUSING
	BUSHING
2	ASSEMBLY, SIDE COVER
	BUSHING
3	PLATE, BYPASS
4	ASSEMBLY, PUMP BLOCK
	BLOCK, CYLINDER
	PISTONS
	SPRINGS, COMPRESSION
	WASHERS, THRUST
5	SPACER
6	ASSEMBLY, MOTOR BLOCK
7	PLUG, 9/16-1
8	PIN, STAINLESS, HEADLESS
9	HFHCS 1/4-20 X 1.25 (SELF-TAPPING)
10	SEAL, LIP
12	BOLT, HEX FLANGE 3/8-24 X 2.5
13	SEAL, LIP
14	RING, RETAINING
15	ROD, BYPASS
16	RING, RETAINING
17	ARM, BYPASS
18	RING, RETAINING (PUSHNUT)
19	SWASHPLATE, TRUNNION, MACHINED
20	SEAL, LIP
21	STUD
22	WASHER
23	ARM, CONTROL
24	WASHER, FLAT
25	TWHCS 5/16-24 X 1.0
26	NUT, HEX LOCK 5/16-24 UNJF
27	SPRING-HELICAL COMPRESSION
28	WASHER
29	SHAFT, INPUT
30	BEARING, BALL
31	RING, RETAINING WIRE
32	SPACER
33	SEAL, LIP
34	RING, RETAINING
35	BEARING, THRUST
36	WASHER, FLAT
37	RING, RETAINING
38	GEAR, PINION, 13T
39	SHAFT, MOTOR
40	WASHER, MOTOR SHAFT
41	WASHER, HT
42	GEAR, 10T/48T
43	GEAR, 10T JACKSHAFT
44	PIN, JACKSHAFT
45	RING, SPIRAL RETAINING
46	GEAR, 52T BULL
47	WASHER
48	BEARING, SLEEVE (INBOARD)
49	AXLE
50	BUSHING
51	SEAL, LIP
52	KIT, SEAL
53	KIT, EXPANSION PLATE
54	KIT, FAN-PULLEY

No.	DESCRIPTION
55	KIT, BRAKE ASSEMBLY
56	CHECK PLUGS
57	KIT, CENTER SECTION-FILTER
59	KIT, BYPASS ARM
60	ASSEMBLY, COVER
61	KIT, FILTER
62	FILTER, BASE
63	CENTER SECTION
64	MAGNET
65	SCREW, 10-32 X 1/2 (SELF-TAPPING)
66	HOUSING, MAIN
67	PLATE, EXPANSION
68	COVER, SIDE
70	PIN, CLEVIS
71	BUSHING
72	WASHER
73	SCREW
74	ARM, BRAKE
75	SPRING
99	NUT, PIN LOCKING
100	ROTOR
119	HUB
120	FAN
121	PULLEY
122	NUT, HEX LOCK
123	WASHER OR CAPSCREW 1/4-20
124	HUB KIT
126	FITTING
127	HOSE, EXPANSION TANK
128	CAP, BARBED VENT
130	NUT, HEX 1/4-20
131	SPACER OR CAPSCREW 5/16-20 X 1
134	WASHER
135	SPRING
138	KIT, BREATHER ASSEMBLY
139	KIT, BREATHER ASSEMBLY
140	ARM, NEUTRAL
141	RTN
144	DEFLECTOR, BELT
150	PUCK, BRAKE
151	PLATE, PUCK
153	ASSEMBLY, BRAKE YOKE
154	SPACER
155	PIN, BRAKE
156	SPRING, BRAKE COMPRESSION
157	CAPSCREW, 1/4-20 X 2.0
158	WASHER
159	NUT, CASTLE 5/16-24
160	PIN, COTTER
200	KIT, RTN

HOW TO USE THIS MANUAL

Each subassembly illustrated in this section is illustrated with an exploded view showing the parts involved. The **item reference numbers in each illustration are for assembly instructions only.** See page 55 for part names and descriptions. A complete exploded view and item list of the transaxle is provided at the end of the repair section.

GENERAL INSTRUCTIONS

Cleanliness is a primary means of assuring satisfactory life on repaired units. Thoroughly clean all exposed surfaces prior to any type of maintenance. Cleaning of all parts by using a solvent wash and air drying is usually adequate. As with any precision equipment, all parts must be kept free of foreign material and chemicals.

Protect all exposed sealing surfaces and open cavities from damage and foreign material. The external surfaces should be cleaned before beginning any repairs.

Upon removal, it is recommended that all seals, O-rings, and gaskets be replaced. During installation lightly lubricate all seals, O-rings and gaskets with a clean petroleum jelly prior to assembly. Also protect the inner diameter of seals by covering the shaft with a cellophane (plastic wrap, etc.) material.

Parts requiring replacement must be replaced from the appropriate kits identified in the Items Listing, found at the end of this manual. Use only original Hydro-Gear® replacement parts found in on the Hydro-Gear website. (www.hydro-gear.com)

IMPORTANT: When internal repairs are performed on the hydraulic portion of the ZT-2100, the filter assembly must be cleaned.

TRANSAXLE REMOVAL

It is necessary to remove the ZT-2100 from the vehicle before performing the repair procedures presented in this section.

NOTE: If removing the wheel from the transaxle, do so by removing the four (4) lug nuts. Do not remove the axle/hub nut.

LIMITED DISASSEMBLY

The following procedures are presented in the order in which they must be performed to completely disassemble the unit. Do not disassemble the unit any farther than is necessary to accomplish the required repairs. Each disassembly procedure is followed by a corresponding assembly procedure.

Reassembly is accomplished by performing the “Assembly” portions of the procedures. If the unit has been completely disassembled, a summary of the assembly procedures, in the order in which they should occur, is given on page 51.

TOOLS AND TORQUES

Table 1. Required Tools

Miscellaneous	Sockets
EZT® Service & Repair Manual	1/2”-3/8” Adapter
Flat Blade Screw Driver (2)	3/8” Deep
Torque Wrench	1/2” Deep
Air Impact Wrench	7/16” Deep
Rubber Mallet	9/16” Deep
Breaker Bar	3/4” Deep
Side Cutters/Snips	13/16” Deep
Pliers	7/8”
Needle Nose	T-25 Torx Head
Large External Snap Ring	T-40 Torx Head
Small Internal Snap Ring	Apex AN-08

Table 2. Required Torque Values

Operation	Torque	Item	Description
Metal Plug	110-150 lb-in [12-17 Nm]	5	Plug 9/16-18
Side Housing Screws	105-155 lb-in [12-17 Nm]	7	Screw 1/4-20 x 1.25
Check Plugs	280-400 lb-in [32-45 Nm]	25	Check Plug Assembly
Center Section Bolts	525-700 lb-in [60-80 Nm]	27	Screw 3/8-24 x 2.5
Control Arm Stop Stud	125-160 lb-in [14-18 Nm]	42	Stud 5/16-24
Control Arm Screw	230-310 lb-in [26-35 Nm]	46	Screw 5/16-24 x 1
Stop Stud Nut	85-120 lb-in [10-14 Nm]	47	Nut, Lock 5/16-24 UNF
Axle Shaft Ret. Nut	55-65 lb-ft [75-88 Nm]	90	Nut, Lock
Hub Locknut	140-160 lb-ft [190-217 Nm]	99	Nut, Hex 3/4-16 Lock
Brake Assembly Screw	80-120 lb-in [9-14 Nm]	104	Screw 1/4-20 x 1
Fan/Pulley Lock Nut	540-660 lb-in [61-75 Nm]	122	PatchLock Nut 1/2 x 20
RTN Adjustment Screw	175-200 lb-in [19-22 Nm]	142	Screw 5/16-24 x 1
Breather Fitting	96-120 lb-in [10-14 Nm]	150	Fitting 9/16
Expansion Tank Screw	25-40 lb-in [3-5 Nm]	154	Screw 10-32 x 0.50

WHEEL HUB AND NUT

Refer to Figure 1.

Disassembly

NOTE: The following procedure is used for teardown of the ZT-2100 unit when assembled with a taper lock shaft. The hub and hub nut should not be removed unless they have been damaged.

1. Reference page 41 and 42 for side housing & brake assembly removal.
2. Remove the side housing screws (7).
3. Remove side housing (2).
4. Remove axle retaining nut (92).
5. Remove bull gear (91).
6. Slide axle shaft and hub assembly out of main housing in the direction of the arrow (Figure 1).

Inspection

1. Inspect the components for damage.

Assembly

NOTE: In a situation that a hub and/or hub nut is damaged and must be removed it must be replaced with a new hub and/or hub nut.

1. Slide axle shaft assembly into axle horn of main housing (66).

NOTE: Cover the end of the axle shaft with cellophane to protect the seal during installation of the axle shaft assembly.

2. Install bull gear (91) and axle retaining nut (92).
3. Install side housing (2) and side housing screws (7). Refer to Table 2 for screw torque specifications.

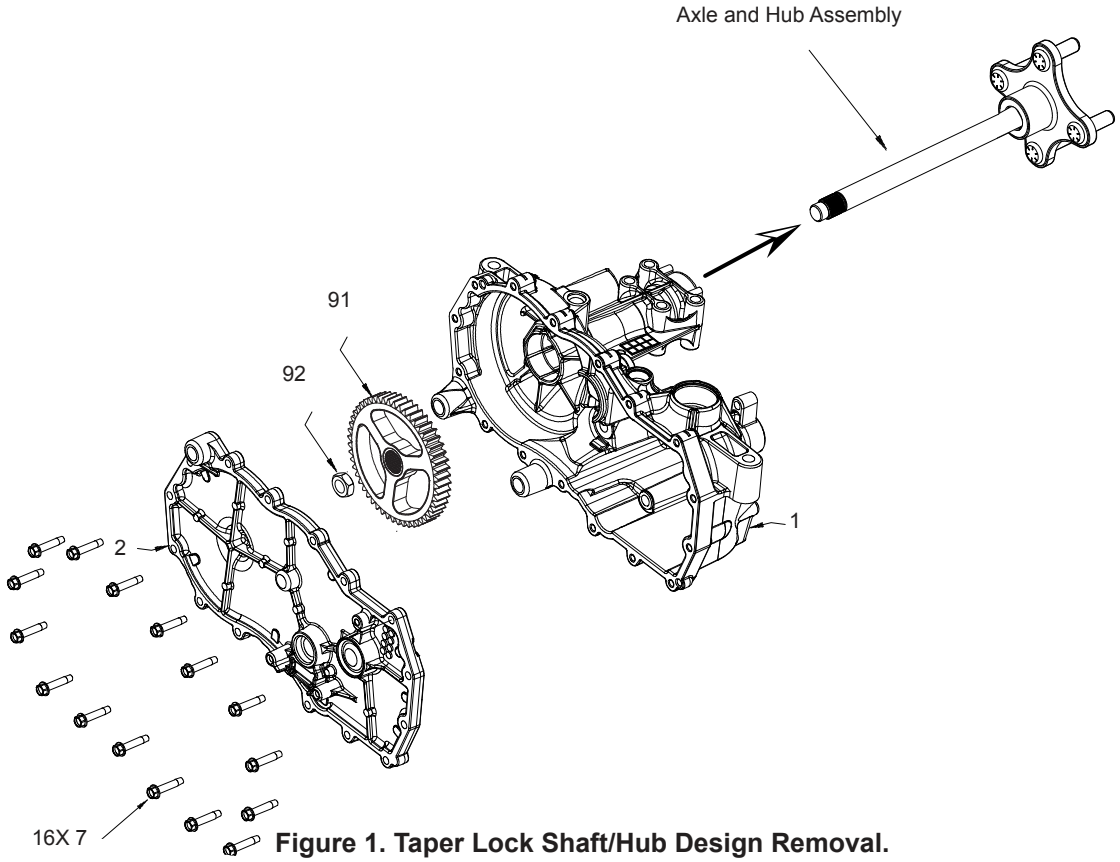

Figure 1. Taper Lock Shaft/Hub Design Removal.

EXPANSION TANK

Refer to Figure 2.

Disassembly

NOTE: The following procedure should only be done if the expansion tank has been damaged as the transaxle can be dissassmbled with the expansion tank left intact.

1. Remove the expansion tank hex screw (154).
2. Remove the expansion tank (153).
3. Remove the breather fitting (156) and the breather hose (158).
4. Remove the breather case tube (159), breather hose (151), and o-ring (152). Discard o-ring (152).

Inspection

1. Inspect the components for damage.

Assembly

1. Install the breather case tube (159) on to the breather hose (151) and attach to fitting.
2. Install the expansion tank (153) and the expansion tank hex screw (154).
   Note: Refer to Table 2 for torque specifications.
3. Install the breather hose (158) and the breather fitting (156)

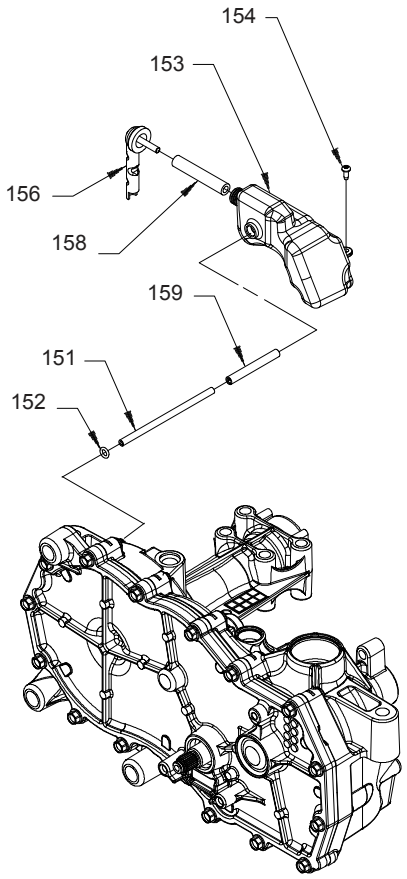

Figure 2. Expansion Tank Removal.

CONTROL ARM AND BYPASS ARM

Refer to Figure 3.

Disassembly

1. Loosen and remove the lock nut (47) and flat washer (45). Discard the lock nut (47) and flat washer (24) as they will not need to be used after the unit is installed in the machine.
2. Remove the torx head screw (46) from the directional control.
3. Remove control arm (44) and puck (43). Discard the puck.
4. Remove the bypass arm retaining ring (34) and bypass arm (34). Discard the retaining ring.
5. If necessary, remove and replace the control arm stop stud (42).

Inspection

1. Inspect the control arm stop stud (42) for wear or damage.
2. Inspect the control arm (44) for wear or damage.
3. Inspect the bypass arm (34) for wear or damage.

Assembly

1. Install the bypass arm (34) onto the bypass rod. Secure the bypass arm with a new retaining ring (35).
2. Replace the control arm stop stud (34) if removed. Torque according to specifications in Table 2 on page 36.
3. Install the control arm (44).
4. Install the control arm screw (46). Refer to Table 2 for screw torque specifications.

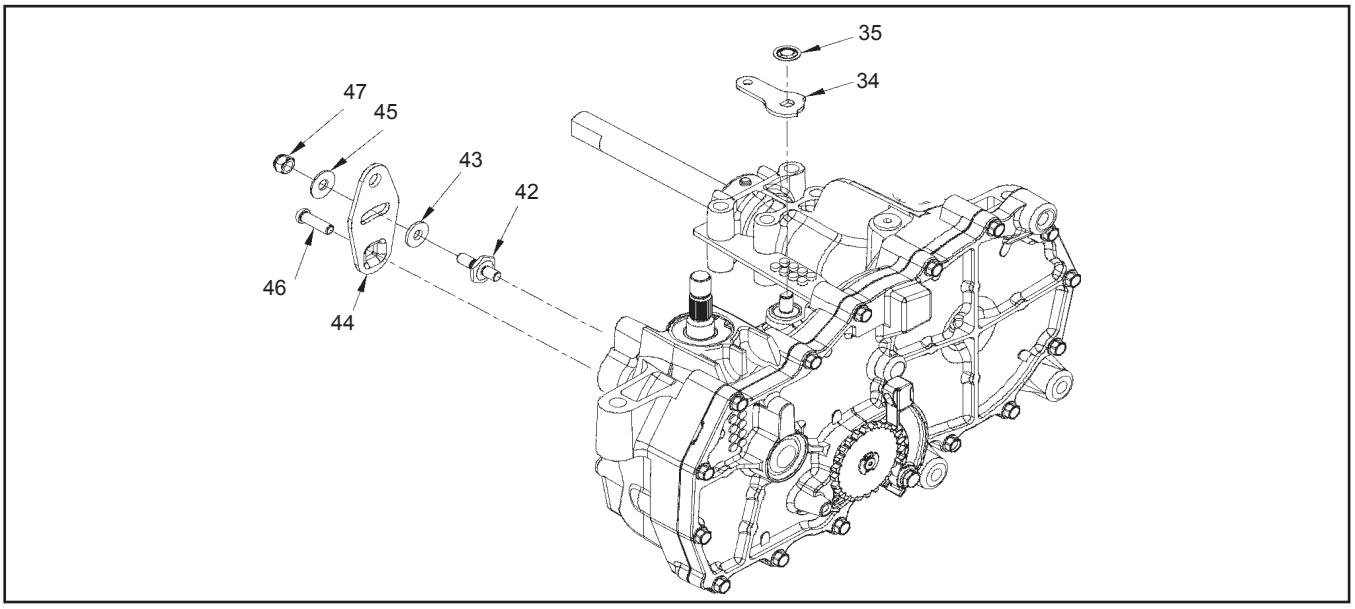

Figure 3. Control Arm and Bypass Arm

SEAL KIT REPLACEMENT

Before disassembly, wipe the unit free of any debris to avoid contamination.

Refer to Figure 4.

Input Seal

1. Remove the input pulley from the input shaft.
2. Remove the seal retaining ring (57).
3. Carefully pull the input seal (56) out of the housing bore with a “hook” type tool. Care must be taken to avoid damage to the housing bore or shaft sealing area.
4. Lubricate the new seal with petroleum jelly prior to installation.
5. Wrap the shaft keyway (splines) with cellophane to prevent damage to the seal lip during installation.
6. Slide the seal over the shaft and press it into the housing bore.
7. The seal should seat against the spacer.
8. Install the seal retaining ring (57) and make sure it is fully seated in its groove.

Output Seal

1. The seal (96) can be replaced by following steps 2-6 of the procedure used to replace the input seal.
2. Install the retaining ring (157) and make sure it is fully seated in its groove.

Motor Shaft Seal

1. Remove the brake assembly. See page 41.
2. The seal (10) can be replaced by following steps 3-6 of the procedure used to replace the input shaft.

Trunnion Seal

1. Remove the control arm and any attachments to the control arm. See page 39.
2. The seal (41) can be replaced by following steps 3-6 of the procedure used to replace the input shaft.

Bypass Seal

1. Remove the bypass arm and any attachments to the bypass arm. See page 39.
2. Remove the seal retaining ring (33). Remove the bypass rod, keeping the retaining ring (31) attached. Remove the bypass rod seal (30). Deburr the bypass rod.
3. Install the seal (30). Install the bypass rod with the retaining ring (31) attached. Install the seal retaining ring (33).

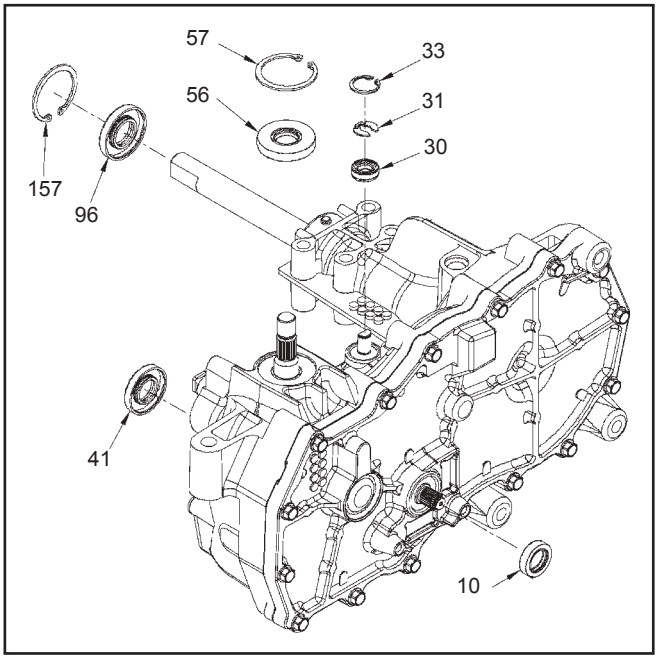

Figure 4. Seal Kit Replacement

COG BRAKE ASSEMBLY

Refer to Figure 5.

Disassembly

1. Remove the control arm and bypass arm. See page 39.
2. Remove the oil from the transaxle. See page 11.
3. Remove the brake arm screw (104), washer (103), brake arm (102) and bushing (101).
4. Remove the retaining ring (31) and cog brake disc (100).
5. Remove the motor shaft lip seal (10), if removing the side housing.

Inspection

1. Check the brake arm and cog brake disc for excessive wear or teeth damage. Replace if necessary.
2. Check for excessive looseness at the arm pivot point.

Assembly

1. Install the motor shaft lip seal (10), if removed. Refer to page 40. Remember to use a seal protector during installation.
2. Install the cog brake disc (100) and retaining ring (31).
3. Install the bushing (101), brake arm (102), washer (103) and brake arm screw (104). Torque screws to 80-120 in-lbs (9-14 Nm).
4. Fill the transaxle with new oil. See page 11.
5. Install the bypass arm and control arm. See page 39.

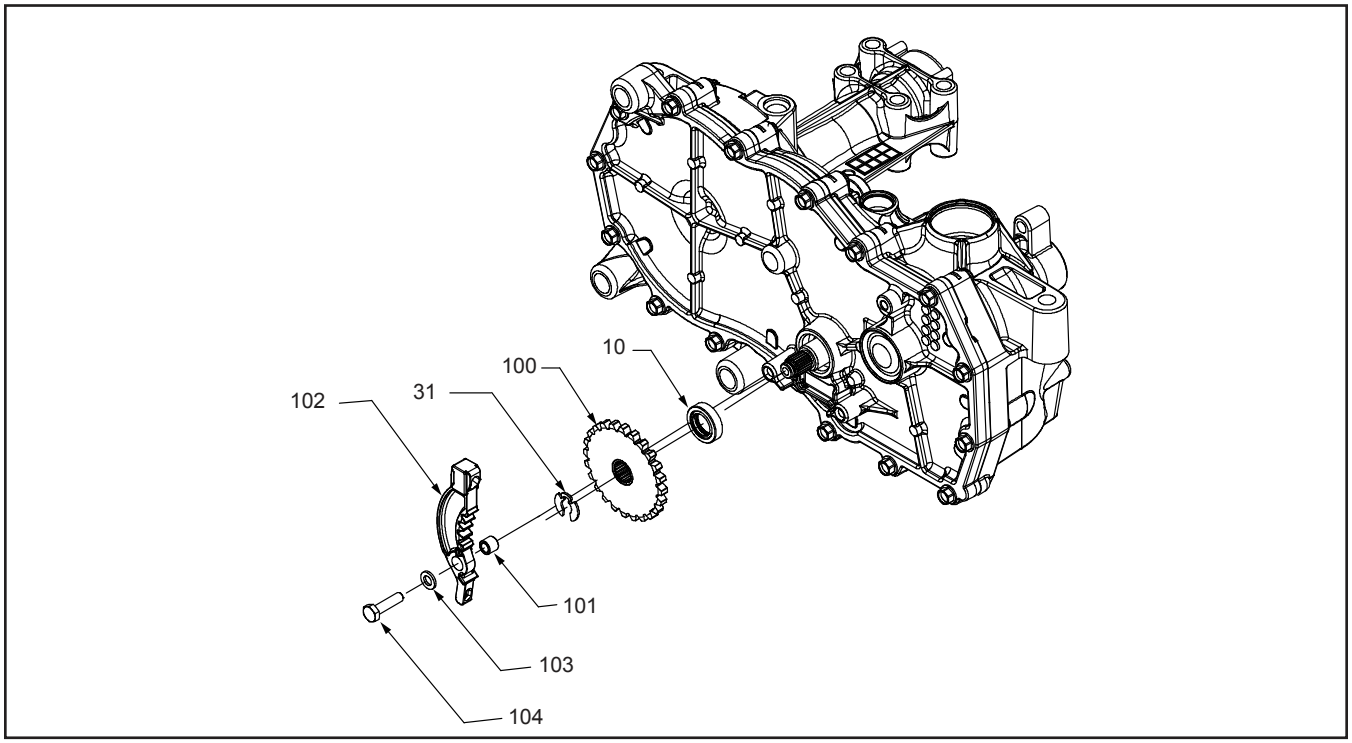

Figure 5. Cog Brake Assembly

SIDE COVER

Refer to figure 6.

Disassembly

1. Remove the control arm and bypass arm. See page 39.
2. Remove the oil from the transaxle. See page 11.
3. Remove the brake assembly. See page 41.
4. Remove the motor shaft lip seal. See page 40.
5. Remove the side housing screws (7).
6. Pull the side housing (2), leaving the axle (94) and bull gear (91) assembled in the main housing. It may be necessary to use pry tools at the pry points to break loose the sealant (positions 1-16 and 4-6, Figure 6).
7. Clean off <u>all</u> the old sealant on the side and main housings. Take care not to damage the sealing surfaces. A wire brush and solvent is effective.

Inspection

1. Inspect the bearing and bushing areas of the side cover.

Assembly

1. Apply a bead of sealant around the perimeter of the side housing face. See sealant pattern on page 52.
2. Install the side housing (2). Use care not to smear the sealant bead.
3. Install the side housing screws (7). Refer to the screw tightening pattern in Figure 6 and torque specification in Table 2 on page 36.
4. Install the remaining seals. Refer to page 40. Remember to use a seal protector during installation.
5. Install the brake assembly. See pages 41.
6. Fill the transaxle with new oil. See page 11.
7. Install the bypass arm and control arm. See page 39.

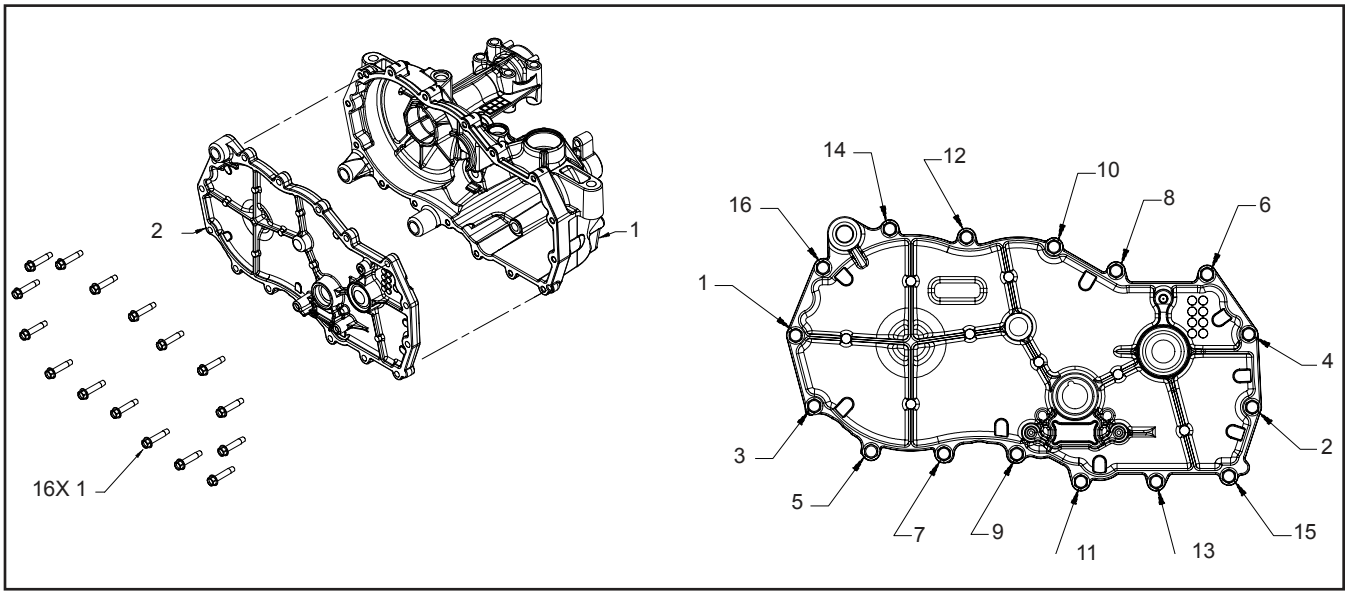

Figure 6. Side Cover

AXLE SHAFT AND REDUCTION GEARS

Refer to Figure 7.

Disassembly

1. Remove the bypass arm and control arm. See page 38.
2. Remove oil from the transaxle. See page 11.
3. Remove the side cover. See page 42.
4. Remove the retaining nut (92) and discard.
5. Remove the bull gear (91)and inboard sleeve bearing (93).
6. Remove the reduction gears (81 & 82), jack shaft pin (83) and washers (80).
7. Remove seal retaining ring (157), seal (96), axle (94) and bushing (95).

Inspection

1. Inspect the bull gear for wear or damage.
2. Inspect the reduction gears, jack shaft pin and washers.
3. Inspect the axle shaft, bearing and bushing.
4. Inspect the expansion plate.

Assembly

1. Reassemble and install the reduction gears (81 & 82), jack shaft pin (83) and washers (80).
2. Install the bull gear (91), and sleeve bearing (93) onto the axle (94).
3. Install the axle (94) and bushing (95) into the housing (1).
4. Install the retaining nut (92) onto the axle. Refer to the torque specification in table 2 on page 36.
5. Install the axle seal (96) and retaining ring (157).
6. Install the side cover. See page 42.
7. Install all remaining seals. See page 40.
8. Fill the transaxle with oil. See page 11.
9. Install the bypass arm and control arm. See page 39.

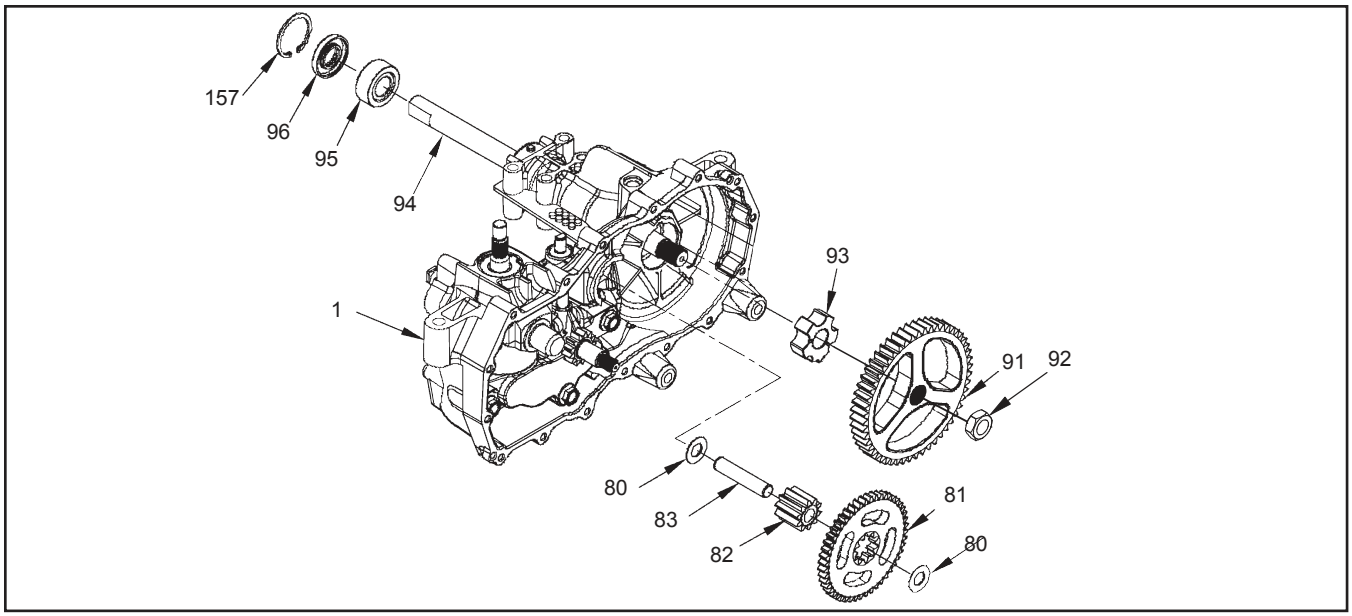

Figure 7. Axle Shaft, Reduction Gears and Expansion Plate

MOTOR SHAFT

Refer to Figure 8.

Disassembly

1. Remove the control arm and bypass arm. See page 39.
2. Drain the oil from the transaxle. See page 11.
3. Remove the side cover. See page 42.
4. Remove the reduction gears. See page 43.
5. Remove flat washer (70), motor shaft and pinion gear (73 & 72) and flat washer (74).

   Note: It is not necessary to seperate the motor shaft (73) and pinion gear (72) unless they are damaged and need replaced.

Inspection

1. Inspect the motor shaft (73), pinnion gear (72) and flat washers (70 & 74) for wear or damage.

Assembly

1. Insert the motor shaft (73) with the pinnion gear (72) and flat washers (70 & 74) into the center section (20).
2. Install the reduction gears. See page 43.
3. Install the side cover. Refer to page 42.
4. Install new seals. Refer to page 40.
5. Fill the transaxle with oil. See page 11.
6. Install the bypass arm and control arm. See page 39.

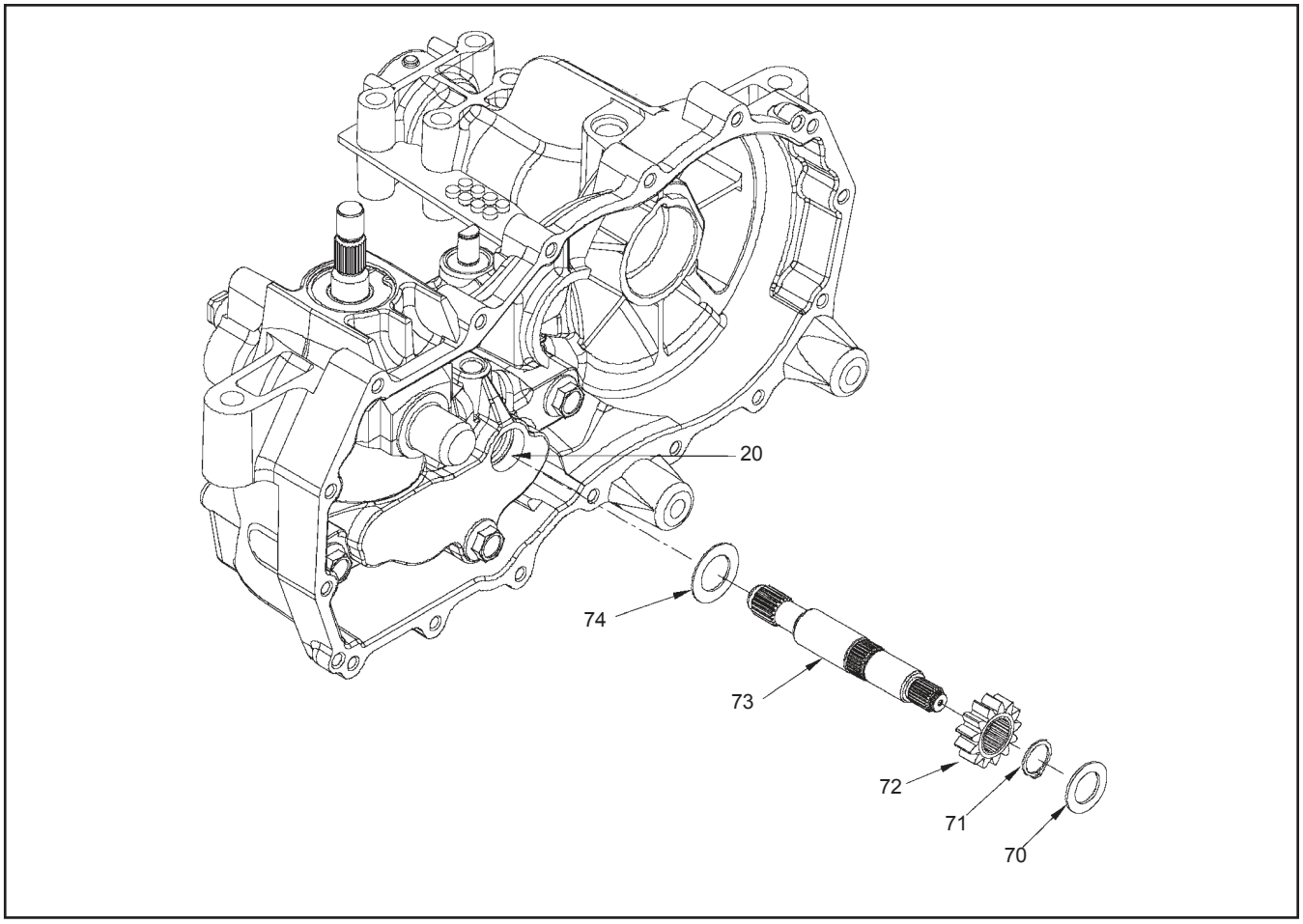

Figure 8. Motor Shaft

INPUT SHAFT AND BYPASS ROD

Refer to Figure 9.

Disassembly

1. Remove the control arm and bypass arm. See page 39.
2. Drain the oil from the transaxle. See page 11.
3. Remove the side cover. See page 42.
4. Remove the reduction gears. See page 43.
5. Remove the motor shaft. See page 44.
6. Remove the retaining ring (57) and shaft seal (56). Discard the seal.
7. Remove the spacer (55) and input shaft assembly (54, 53 & 52).
8. Remove the compression spring (50) and washer (51).
9. Remove the retaining rings (35 & 31), bypass rod (32) and seal (30). Discard the seal

Inspection

1. Inspect the input shaft components and bypass rod for wear or damage.

Assembly

1. Visually ensure that the pump block is aligned concentrically with the center section running face.
2. Install the compression spring (50) and washer (51).
3. Insert the input shaft (52), with bearing (53) and retaining ring (54), into the pump block assembly. NOTE: Do not force the shaft and bearing as damage may occur. If alignment is correct, the shaft assembly will fit into place
4. Install the washer (55), seal (56) and retaining ring (57). Use a seal protector when installing the input shaft seal.
5. Deburr the end of the bypass rod. Install the bypass rod (32), retaining ring (31), seal (30) and retaining ring (35).
6. Install the motor shaft. See page 44.
7. Install the reduction gears. See page 43.
8. Install the side cover. See page 42.
9. Install new seals in the side housing. See page 40.
10. Fill the transaxle with oil. See page 11.
11. Install the bypass arm and control arm. See page 39.

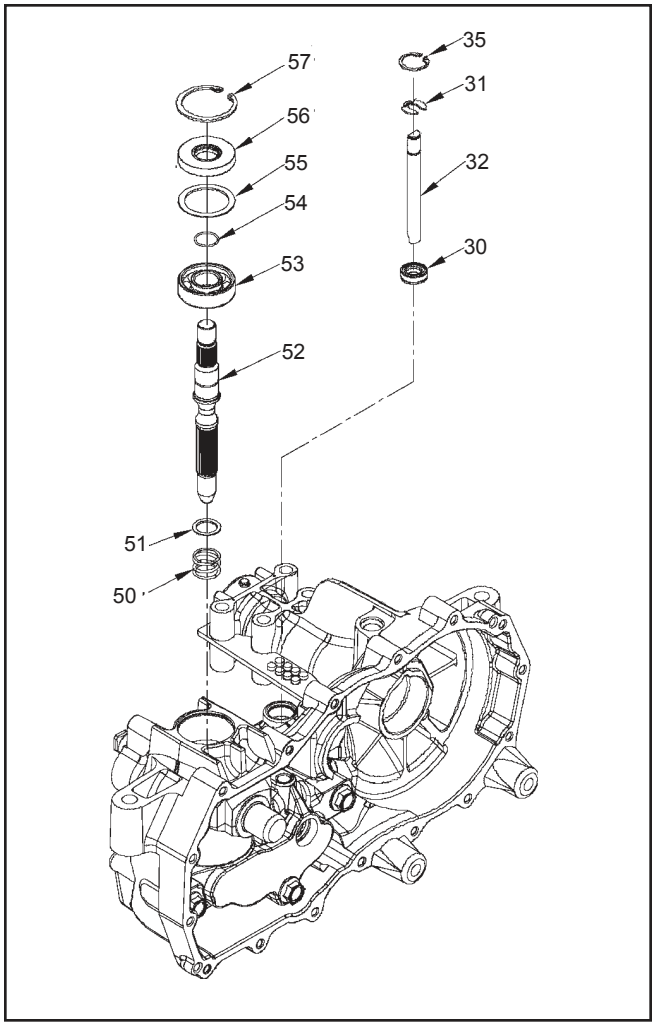

Figure 9. Input Shaft and Bypass Rod Assembly

HYDRAULIC COMPONENTS

Refer to Figures 10-19.

Disassembly

1. Remove the bypass arm and control arm. See page 39.
2. Drain the oil from the transaxle. See page 11.
3. Remove the side cover. See page 42.
4. Remove the reduction gears. See page 43.
5. Remove the motor shaft. See page 44.
6. Remove the input shaft and bypass rod. See page 45.
7. **(See Figure 10)** Remove the swashplate (40) and pump cylinder block (131) as one assembly. NOTE: Removal will be aided by applying a small amount of pressure on the trunnion mounted swashplate towards the center section. Also note that the control arm (44, page 39) may be loosely assembled at this point to assist in swashplate removal. While gently removing the swashplate and block assembly, keep the block face flush with the center section to minimize damage to the running surface.
8. **(See Figure 11)** Disassemble the pump cylinder block (131) from the swashplate (40).
9. **(See Figure 12)** Check each piston for proper operation by pressing the pistons in and releasing them in the block bore. Disassemble the pump cylinder block. Check for piston/block wear in the cylinder bore. Inspect the pistons (A), piston springs (C) and thrust washers (B) for excessive wear or damage. NOTE: Thrust washers may be held in place in the piston by residual oil.
10. Reassemble the pistons, springs and washers into the cylinder block and set aside.
11. **(See Figure 13)** Remove the thrust bearing assembly (60) from the swashplate (40).

(Center Section/Filter)

12. **(See Figure 14, 15, and 16)** Remove the center section mounting screws (27). NOTE: The center section is under motor block piston spring pressure. These screws are factory installed to 700 lb-in (80 Nm) and use an anaerobic thread adhesive. A breaker bar will be required at this step. Clean the internal threads of the mounting holes with compressed air.
13. Remove the center section and filter assembly (20, Figure 15). NOTE: Bypass plate (Figure 16) may slide out of the center section.
14. Remove the filter cover by pressing in and down on the filter cover tabs. Discard the cover.
15. Note the location of both check plugs (25) before removal for correct replacement during reassembly. Remove and inspect the check plug assemblies (25) for debris or damage.
16. Remove the filter base (23) and discard it. NOTE: The filter base is included in the filter kit to be installed during reassembly of the unit.

(Motor Block)

17. **(See Figure 17)** Remove the motor cylinder block assembly (130) from the housing (1).
18. Disassemble the motor cylinder block assembly (130). Check each piston for proper operation by pressing the pistons in and releasing them in the block bore. Disassemble the motor cylinder block. Check for piston/block wear in the cylinder bore. Inspect the pistons, piston springs and thrust washers for excessive wear or damage.

NOTE: Thrust washers may be held in place in the piston by residual oil.

19. Reassemble the pistons, springs and thrust washers into the cylinder block and set aside.

20. Remove the thrust bearing assembly (60) from the housing (1). Inspect the thrust bearing and thrust bearing cavity in the housing.

Inspection

1. Inspect the pump cylinder block running surface for wear or damage.

2. Inspect the swashplate and thrust bearing assemblies for wear or damage.

3. Inspect the center section block running surfaces. NOTE: These “sealing” surfaces should be smooth in appearance without scratches, scoring, nicks or abrasions. Drag a fingernail across the surface to detect uneven wear or scratches which may not be visible.

4. Inspect the threaded check plug ports of the center section for debris or damage.

5. Inspect the motor cylinder block running surface for damage and wear.

6. Inspect all bearing, bushing and wear areas in the housing.

Assembly

(Motor Block)

1. **(See Figure 17)** Turn the housing (1) so the motor thrust bearing cavity is facing up. This will assist in the installation of the motor thrust bearing assembly (60) keeping it in the bearing cavity during installation of the center section assembly (20, Figure 18).

2. Insert the thrust bearing (60) in the housing (1). NOTE: Place the thin race of the bearing towards the housing bearing cavity. The thick race must face the pistons.

(Center Section/Filter)

3. **(See Figure 16)** Install the new filter base (23) onto the center section (20).

4. It will be necessary to clean the check plugs prior to re-assembly. Install the check plugs (25), in their correct location, into the center section (20). Tighten the check plugs according to Table 2, page 36.

5. Align the tabs on the filter cover with the slots in the filter base and carefully press the cover onto the base until the tabs snap into place. Insure the bypass plate (Figure 16) is located properly in the center section.

6. **(See Figure 8 & 18)** Install the motor shaft (73), pinion gear (72) and flat washers (74 & 70) into the center section (20).

7. Assemble the motor block assembly (130) onto the motor shaft (73).

8. **(See Figure 18)** Install the motor shaft, center section and motor block assembly into the housing so that the motor block pistons contact the thrust bearing race. NOTE: Hold in place and insure all pistons are still positioned correctly in the cylinder bore by confirming spring bias against the center section.

9. **(See Figure 14)** After applying thread adhesive, insert the center section mounting screws (27) while holding downward pressure on the center section assembly (20).

10. Tighten the center section mounting screws (27) to the proper torque. Refer to Table 2 page 36. NOTE: The center section must be fully seated into the pilot bore before the screws are tightened. The center section will not self locate.

(Swashplate/Pump Block)

11. **(See Figure 11)** Install the pump thrust bearing (60) in the trunnion machined swashplate (40). NOTE: Place the thin race of the bearing towards the swashplate. The thick race must face the pistons.

12. **(See Figure 10)** Place the pump block assembly (131), pistons down, on top of the thrust bearing (60) in the swashplate (40).

13. Coat the pump running surface with clean motor oil.

14. *Care must be taken to prevent the scaring or scratching of the center section sealing face during this step.* Insert the shaft of the swashplate/pump block assembly (Figure 18) into the housing while simultaneously compressing the pistons in the block. NOTE: To assist in the installation of these components, insert the assembly until 3/4 of the pump block is covered by the center section. Then slightly press the shaft end toward the center section while pushing the shaft into its bore.

15. Install the input shaft and bypass rod. See page 45.

16. Install the axle shaft, and reduction gears. Refer to page 43.

17. Install the side cover and brake. See pages 41-42.

18. Install new seals. See page 40.

19. Fill the transaxle with new oil. See page 11.

20. Install the bypass arm and control arm. See page 39.

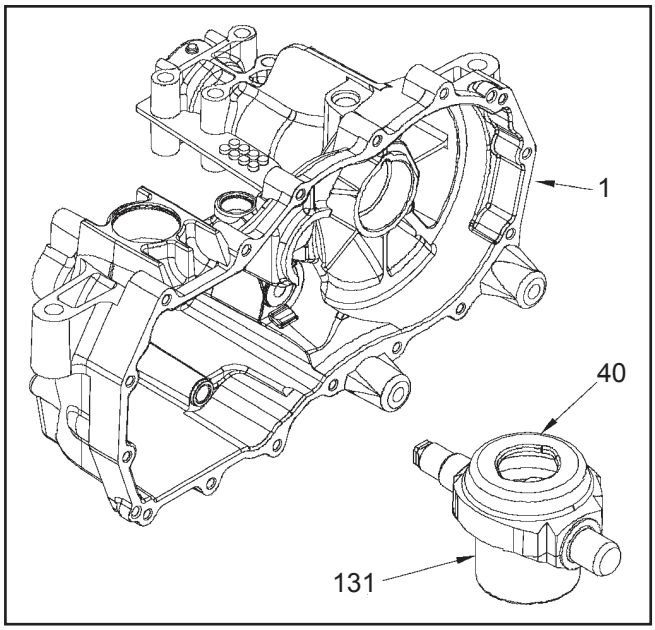

Figure 10.

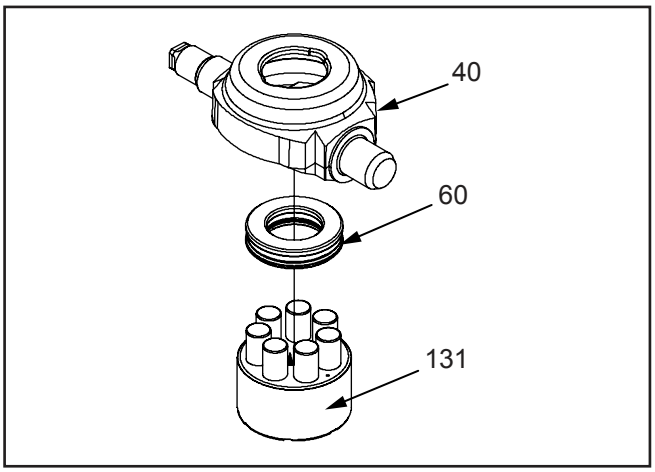

Figure 11.

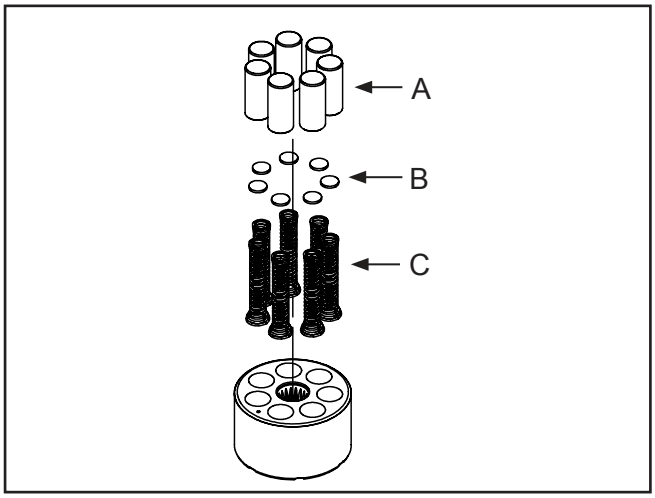

Figure 12

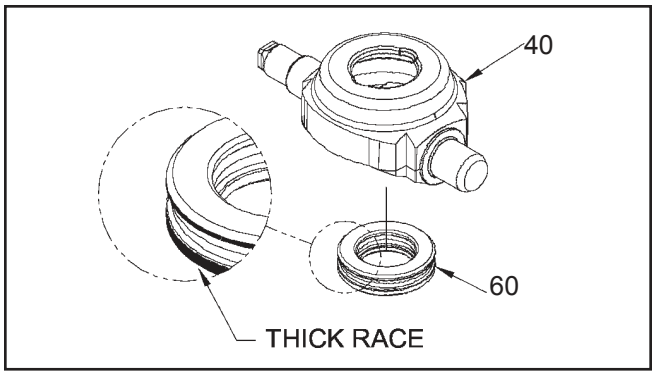

Figure 13.

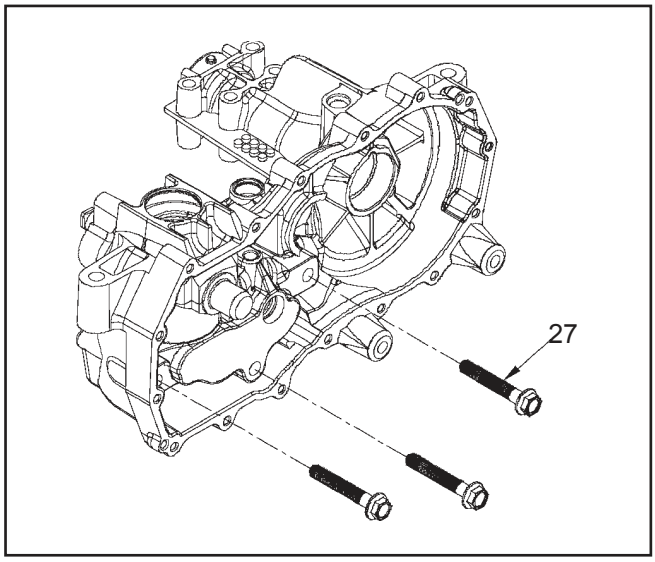

Figure 14.

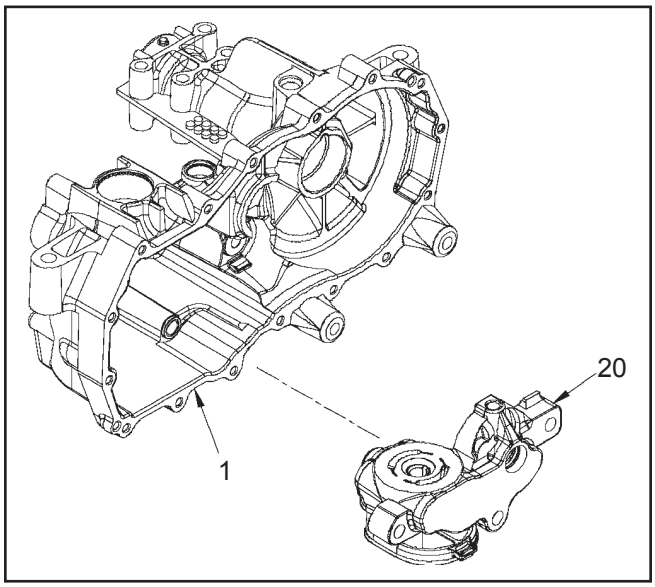

Figure 15.

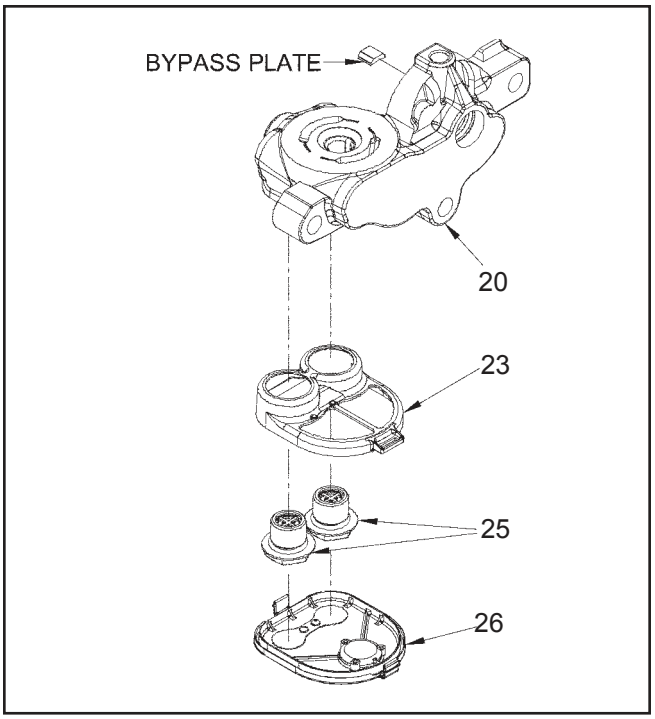

Figure 16.

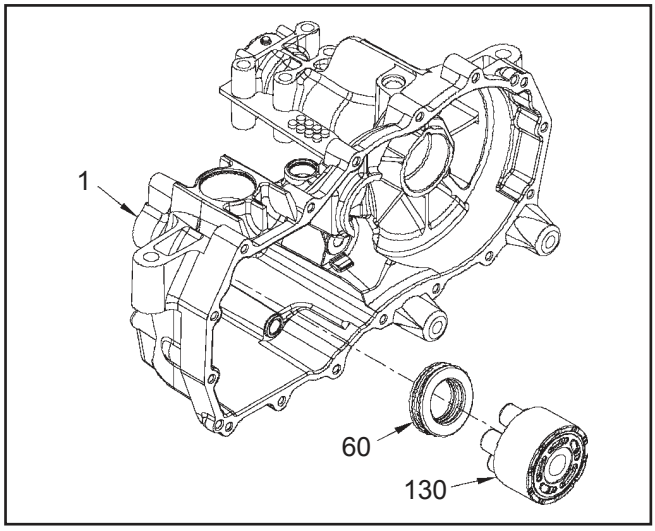

Figure 17.

TRANSAXLE INSTALLATION

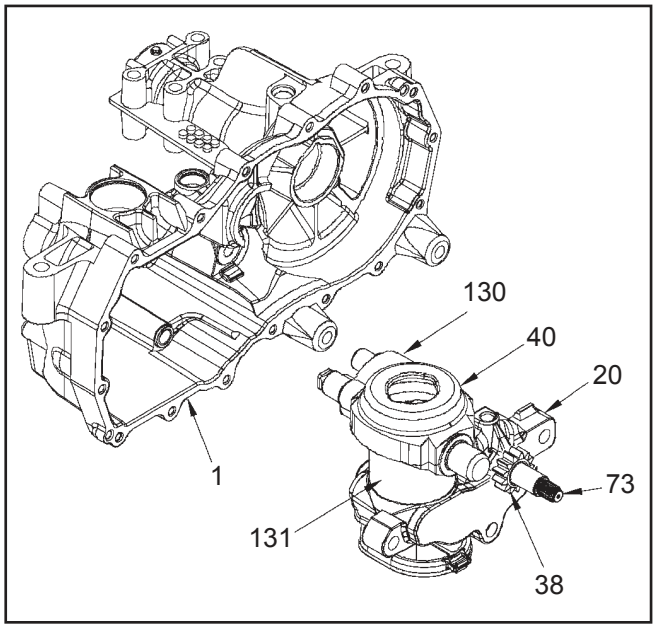

Figure 18.

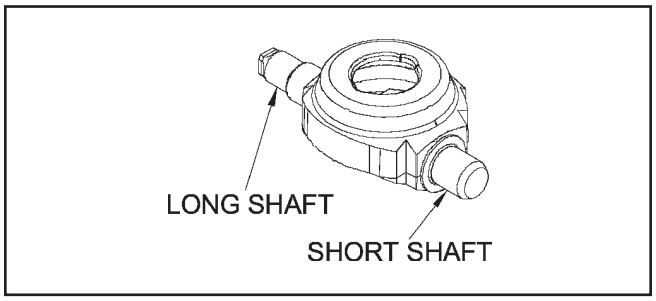

Figure 19.

Use the following procedure to complete the installation of the transaxle on the vehicle.

1. Install and secure the transaxle on the vehicle according to the instructions in the vehicle owner's manual.
2. With the vehicle raised, install the wheels on the axles, and snug the wheel hardware.
3. Lower the vehicle wheels to the ground and torque the wheel hardware per the vehicle owner's manual.

ASSEMBLY AFTER A COMPLETE TEARDOWN

If the unit has been torn down completely, the following summary identifies the assembly procedures necessary to completely assemble the unit. Each assembly procedure is located by a page reference.

The part reference numbers provided in each assembly procedure are keyed to the individual exploded views, and are also keyed to the complete unit exploded view on page 30.

1. Install the hydraulic components. See pages 46-50.
2. Install the input shaft and bypass rod. See page 45.
3. Install the axle shaft and reduction gears. See page 43.
4. Install the cog brake and side cover. See pages 41-42.
5. Install new seals. Page 40.
5. Fill the transaxle with new oil. See page 11.
6. Install the bypass arm and control arm. See page 39.
7. Install the transaxle onto the vehicle.
8. Perform the purge procedures listed on page 12.

SEALANT APPLICATION

NOTE: Prior to applying the new sealant, the old sealant must be removed from all surfaces.

A small consistent bead of the sealant around the housing face will be sufficient. Use sparingly.

The illustration below indicates the correct areas.

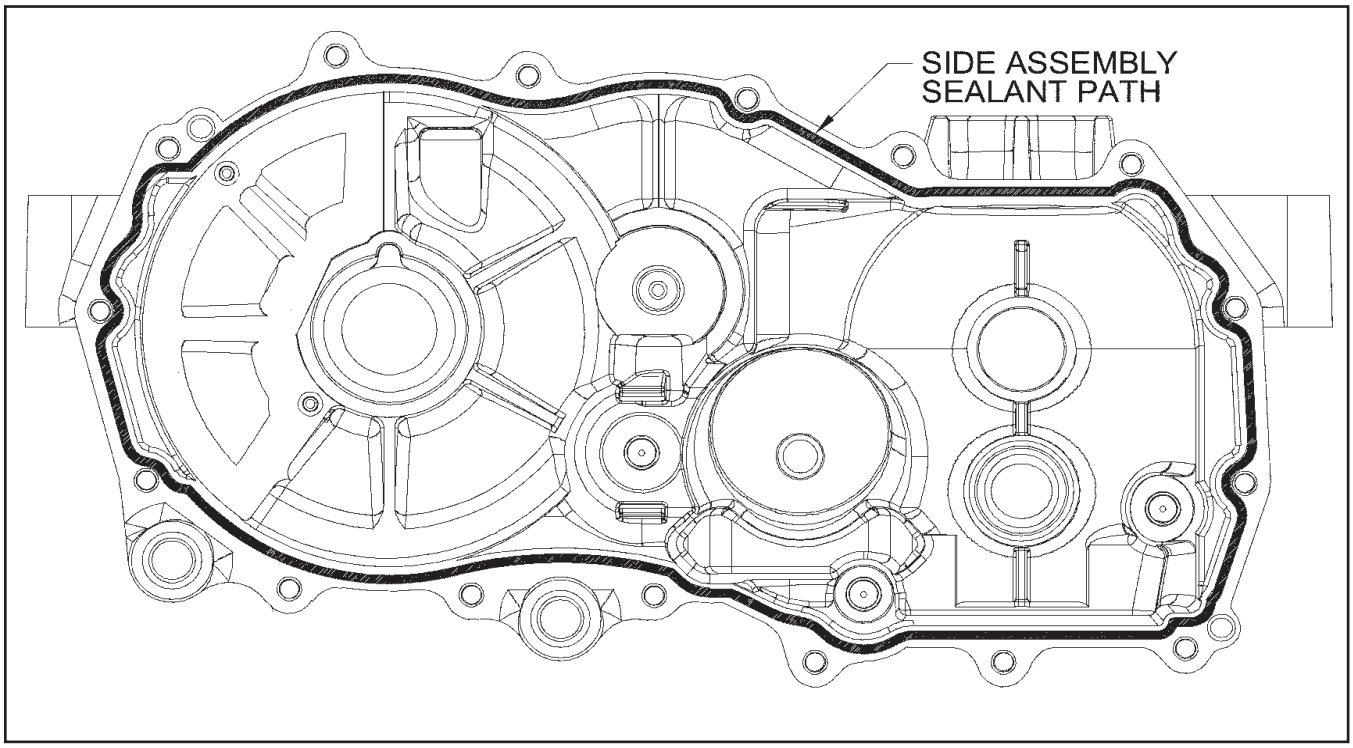

ZT-2100® EXPLODED VIEW

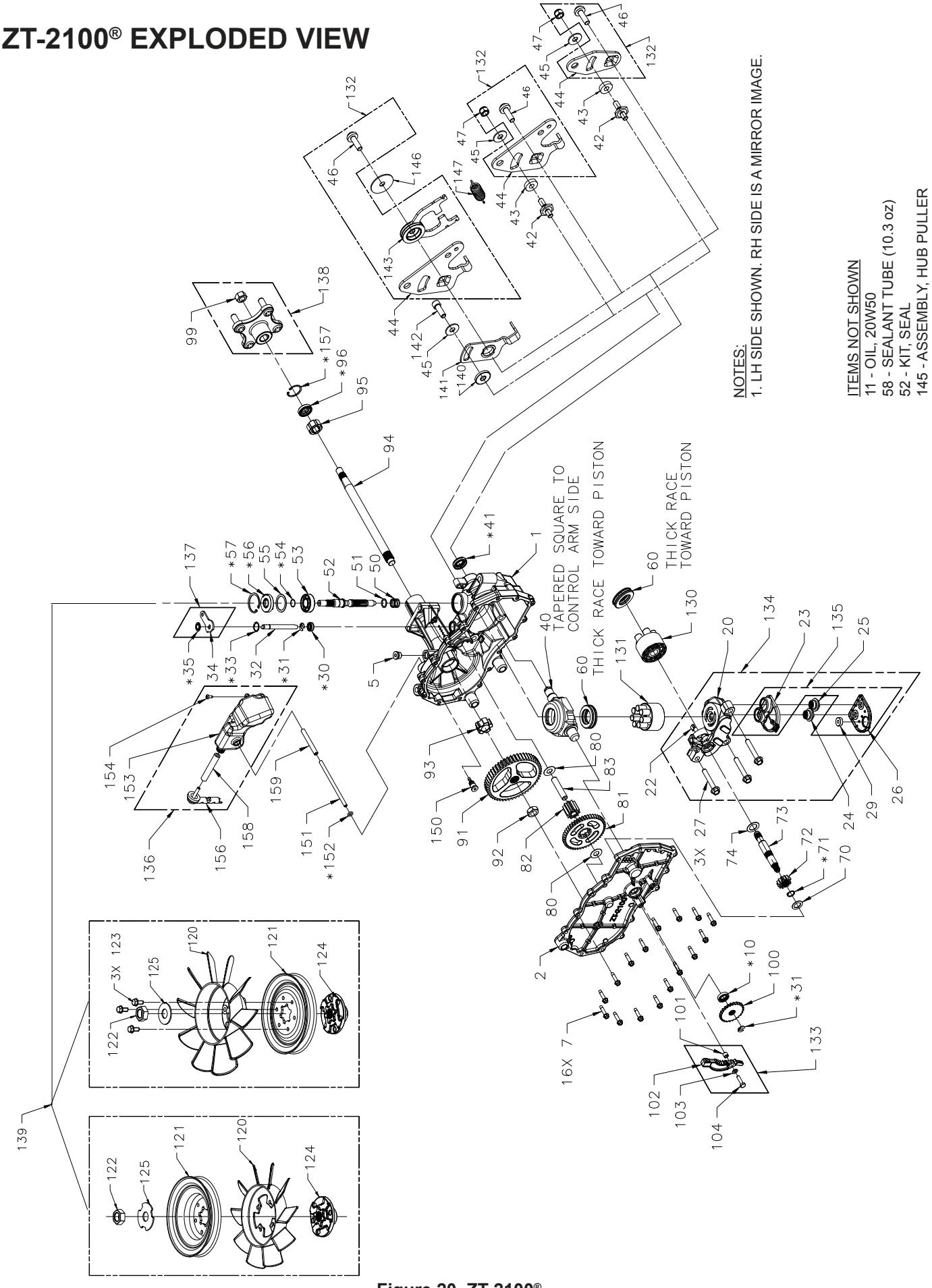

Figure 20. ZT-2100®

ZT-2100® ITEMS LIST

No.	DESCRIPTION
1	ASSEMBLY, MAIN HOUSING
2	ASSEMBLY, SIDE HOUSING
5	PLUG 9/16-18 (METAL)
7	SCREW, HEX WASHER
10	SEAL, LIP .625 X 1.0 X .25
20	CENTER SECTION
22	PLATE, BYPASS
23	BASE, FILTER
24	CHECK PLUG
25	CHECK PLUG
26	COVER, FILTER
27	BOLT, HFHCS 3/8-24X2.5 (PATCH)
29	MAGNET, RING
30	SEAL, LIP .375X.75X.25
31	RING, RET .375 EXTERNAL
32	ROD, BYPASS
33	RING, RET .750 INTERNAL
34	ARM, BYPASS
35	RING, RTNG .375 EXT
40	SWASHPLATE
41	SEAL, LIP 18 X 32 X 7
42	STUD, SHORT 5/16-24
43	WASHER, PLASTIC
44	ARM, CONTROL
45	WASHER .34X.88X.06
46	BOLT, TWHCS 5/16-24 X 1.00 (PATCH)
47	NUT, HEX LOCK 5/16-24 UNF
48	SPACER
50	SPRING-HELICAL COMPRESSION
51	WASHER .591 X .787 X .040
52	SHAFT, INPUT
53	BALL BEARING
54	RING, RETAINING WIRE .561 1 ID
55	SPACER
56	SEAL, LIP 17 X 40 X 7
57	RING, RETAINING
60	BEARING, THRUST 30 X 52 X 13
70	WASHER, FLAT 5/8 X 1.0 X .05
71	RING, RETAINING
73	SHAFT, MOTOR
74	WASHER, MOTOR SHAFT .71 X 1.16 X .04
80	WASHER, HT .5 X 1.0 X .032
82	GEAR, 10T JACKSHAFT
83	PIN, JACKSHAFT
91	GEAR, 52T BULL
92	NUT, HEX 5/8-18 PATCH
93	SLEEVE BEARING (INBOARD)
94	SHAFT, AXLE,
95	SLEEVE BEARING (OUTBOARD)
96	SEAL, LIP .75 X 1.25 X .313
99	NUT, HEX LOCK 9/16-18
100	DISC, COG BRAKE
102	ARM, BRAKE
103	WASHER, .28 X .50 X .063
104	BOLT, 1/4-20 X 1 W/PATCH
105	PIN, CLEVIS
106	SPRING, EXTENSION
108	WASHER, .28 X .50 X .063
109	BOLT, 1/4-20 X 1 W/PATCH

No.	DESCRIPTION
110	RING, RETAINING .375 EXT
120	FAN
121	PULLEY
122	NUT, HEX 1/2-20
123	HFHCS-STAP 12-24X.5
124	HUB
125	WASHER
131	BLOCK, CYL -PUMP
130	BLOCK, CYL -MOTOR
138	HUB, 4 STUD (3.6 TAPER, 10.1)
140	SPACER .320 X 1.005 X .179
141	ARM, NEUTRAL
142	BOLT, SHCS 5/16-24X1 (PATCH)
143	ASSEMBLY, RTN
146	WASHER, .343 X 1.500 X .062
147	SPRING, EXTENSION
150	5/16 SAE , 5/32 TUBE
151	HOSE
152	O-RING .103 X .299 ID
153	TANK, EXPANSION
154	BOLT, SELF-TAPPING 10-32 X 1/2
156	VENT, BREATHER
157	RING, RETAINING
158	TUBE, 1/2”
159	CASE, TUBE

GLOSSARY OF TERMS

Axial Piston: Type of design for hydraulic motors and pumps in which the pistons are arranged parallel with the spindle (input or output shaft).

Bantam Duty: A descriptive term relating to the product capacity (meaning: light duty).

Bypass Valve: A valve whose primary function is to open a path for the fluid to bypass the motor or pump. Also referred to occasionally as the freewheel valve or dump valve.

Case Drain Line (Return Line): A line returning fluid from the component housing to the reservoir.

Cavitation: A concentrated gaseous condition within the fluid causing the rapid implosion of a gaseous bubble.

Center Section: A device which acts as the valve body and manifold of the transmission.

Charge Pump: A device which supplies replenishing fluid to the fluid power system (closed loop).

Charge Pressure: The pressure at which replenishing fluid is forced into a fluid power system.

Charge Relief Valve: A pressure control valve whose primary function is to limit pressure in the charge circuit.

Check Valve: A valve whose primary function is to restrict flow in one direction.

Closed Loop: A sealed and uninterrupted circulating path for fluid flow from the pump to the motor and back.

Decay Rate: The ratio of pressure decay over time.

End Cap: See “Center Section”

Entrained Air: A mechanically generated mixture of air bubbles having a tendency to separate from the liquid phase.

Gerotor: A positive displacement pump frequently used as a charge pump.

Hydraulic Motor: A device which converts hydraulic fluid power into mechanical force and motion by transfer of flow under pressure.

Hydraulic Pump: A device which converts mechanical force and motion into hydraulic fluid power by producing flow.

Hydrostatic Pump: See “Hydraulic Pump”

Hydrostatic Transaxle: A multicomponent assembly including a gear case and a hydrostatic transmission.

Hydrostatic Transmission: The combination of a hydraulic pump and motor in one housing to form a device for the control and transfer of power.

Inlet Line: A supply line to the pump.

Integrated Zero-Turn Transaxle: The combination of a hydrostatic transmission and gear case in one housing to form a complete transaxle.

Manifold: A conductor which provides multiple connection ports.

Neutral: Typically described as a condition in which fluid flow and system pressure is below that which is required to turn the output shaft of the motor.

Pressure Decay: A falling pressure.

Priming: The filling of the charge circuit and closed loop of the fluid power system during start up, frequently achieved by pressurizing the fluid in the inlet line.

Purging: The act of replacing air with fluid in a fluid power system by forcing fluid into all of the components and allowing the air a path of escape.

Rated Flow: The maximum flow that the power supply system is capable of maintaining at a specific operating pressure.

Scoring: Scratches in the direction of motion of mechanical parts caused by abrasive contaminants.

Swash Plate: A mechanical device used to control the displacement of the pump pistons in a fluid power system.

System Charge Check Valve: A valve controlling the replenishing flow of fluid from a charge circuit to the closed loop in a fluid power system.

System Pressure: The pressure which overcomes the total resistance in a system, including all efficiency losses.

Valve: A device which controls fluid flow direction, pressure, or flow rate.

Variable Displacement Pump: A pump in which the displacement per revolution can be varied.

Volumetric Displacement: The volume for one revolution.





©2011 Hydro-Gear
Printed in U.S.A.
Rev. P13