COBRA

Y196V

SERVICE MANUAL

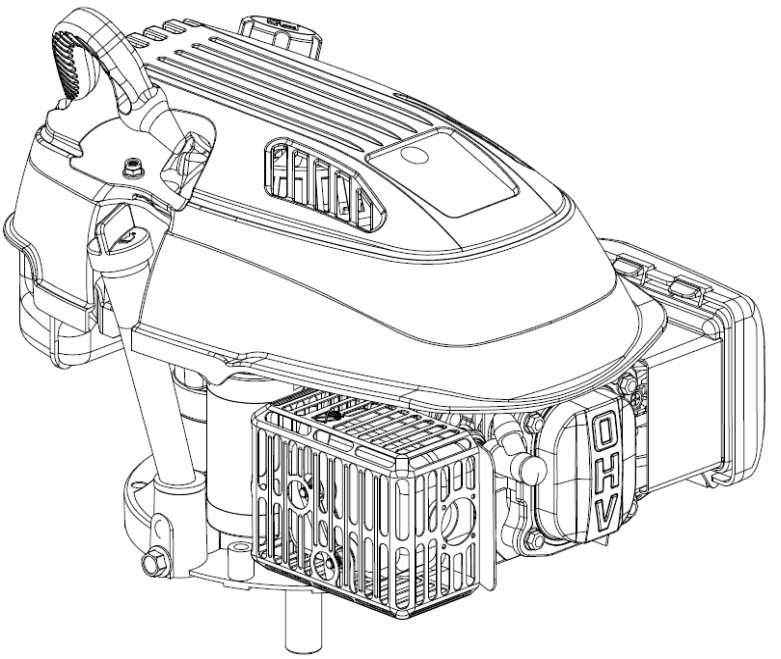

CONTENT

1. INTRODUCTION 1
1-1 Parts Description 1
1-2 Specifications 2
1-3 Service Limit 2
2. DIMENSION AND TORQUE 4
2-1 Dimension 4
2-2 The Position Of Installing Hole 5
2-3 PTO Installing Drawing 5
2-4 Torque Value 6
2-5 Standard Torque Value 7
3. MAINTENANCE 8
3-1 Maintenance Schedule 8
3-2 Engine Oil 8
3-3 Air Cleaner 10
3-4 Wash The Strainer 11
3-5 Spark Plug 11
3-6 Valve Clearance Adjustment 12
3-7 Governor 14
4. DISASSEMBLING AND SERVICING 15
4-1 Troubleshooting 15
4-1-1 Starting Difficult 15
4-1-2 Power Lack 17
4-1-3 Speed Unstable 18
4-1-4 Unable Igniting 18
4-1-5 Gasoline Engine Is Overheat 19
4-1-6 Abnormal Sound 19
4-2 Preparation Of Servicing 20
4-2-1 Safety Precautions 20

4-2-2 Special Tools 21
4-3 Dismounting Chart 22
4-4 Gasoline Engine 23
4-4-1 Recoil starter / fan cover 23
4-4-2 Muffler 26
4-4-3 Fuel Tank 27
4-4-4 Air Cleaner 28
4-4-5 Governor 30
4-4-6 Carburetor 32
4-4-7 Flywheel 37
4-4-8 Cylinder Head / Valve 41
4-4-9 Crankshaft / Piston 49
4-5 Electric Diagrams 58
TRANSFORMATION POINTS 59

1. INTRODUCTION

1-1 Parts Description

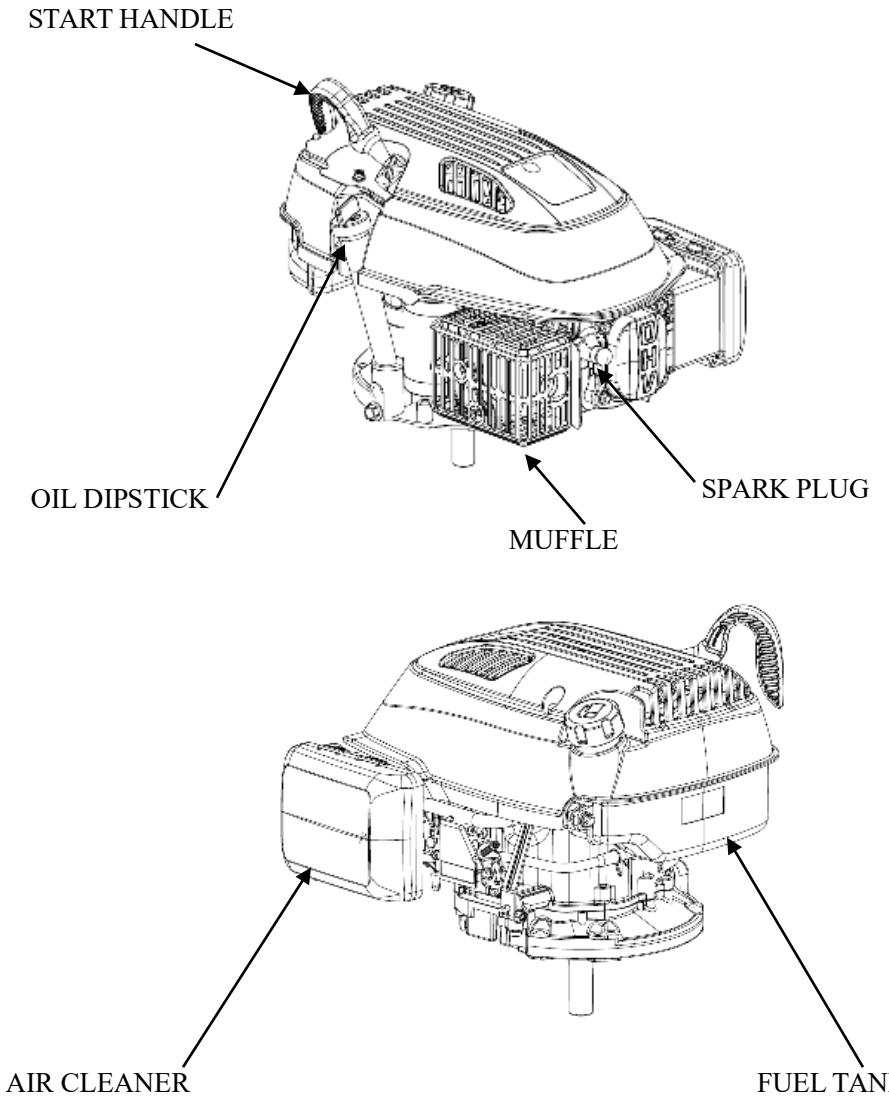

1-2 Specifications

MODEL / ITEM	Y196V
L×W×H(not including crankshaft output terminal)	421×345×280(mm)
Dry Weight	13.5Kg
Engine Type	Single Cylinder Horizontal,4-Stroke, OHV
Displacement	196cc
Bore × Stroke	70mm×51mm
Theoretical Maximum Power	4.2kW/3,600r/min
Recommended Using Power	3.6Kw /2800r/min
Maximum Torque	12Nm/2,800r/min
Fuel Consumption	395g/kWh
Cooling System	Forced Air
Ignition System	Capacitance Discharge Type
PTO Shaft Rotation	Vertical Shaft Output

1-3 Service Limit

UNIT：mm

PARTS	ITEM	STANDARD	SERVICE LIMIT
Engine	Maximum Speed (No Load)	2850±100rpm	--
	Idle Speed	2100±100rpm	--
	Cylinder Compression	1.40Mpa/1200rpm	--
Cylinder Head	Sleeve I.D	70	70.165
Cylinder Head	Warpage	--	0.10
Piston	Skirt O.D.	69.980	69.865
	Piston–to-Cylinder Clearance	0.020-0.050	0.10
	Piston Pin Bore I.D.	18.002-18.010	18.040
	Piston Pin O.D	17.994-17.998	17.954
	Piston Pin-to-Piston Pin Bore Clearance	0.004-0.016	0.08
Piston Rings	Ring Side Clearance： second	0.030-0.065	0.15
	Ring Enc Gap: second	0.2-0.4	1.0
	Ring Width： second	1.497-1.499	1.397

Connecting Rod	Small End I.D		18.004-18.012	18.052
	Big End I.D		30.015-30.025	30.050
	Big End Clearance		0.017-0.032	0.1
	Small End Clearance		0.006-0.018	0.08
Crankshaft	Crankshaft Pin O.D		29.993-29.998	29.94
Valve	Valve Clearance	IN	0.10±0.02	--
		EX	0.15±0.02	--
	Stem O.D	IN	5.465-5.480	5.315
		EX	5.465-5.480	5.315
	Guide I.D	IN/EX	5.500-5.512	5.562
	Stem Clearance	IN	0.020-0.044	0.10
		EX	0.050-0.077	0.12
	Seat Width		0.8	2.0
	Spring Free Length		64.0	63
Camshaft	Cam Height	IN	27.70	27.45
		EX	27.75	27.50
	Journal O.D		13.965-13.990	13.915
Crankcase Cover	Camshaft Bracket I.D		14.0-14.018	14.048
Carburetor	Main Jet		#68(DL)or#70（KAMA）	--
	Float Height		13.7	--
	Pilot Screw Opening		2-5/8turns	--
Spark Plug	Gap		0.7-0.8	--
Spark Plug Cap	Resistance		4.5-5.5kΩ	--
Ignition Coil	Resistance	Primary coil	1.0-1.3Ω	--
		Secondary coil	10.5-11kΩ	--
	Air Gap	（at flywheel）	0.30-0.40	--

2. DIMENSION AND TORQUE

2-1 Dimension

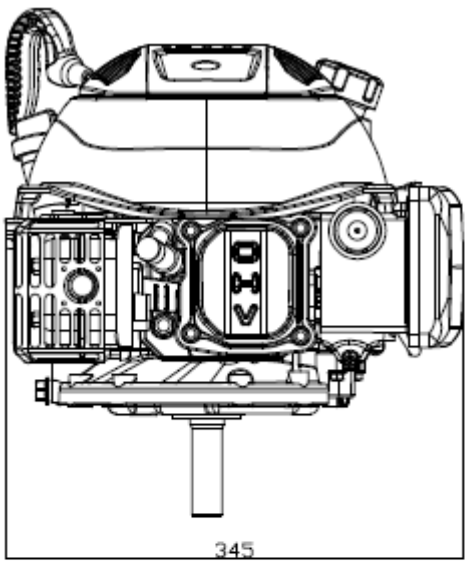

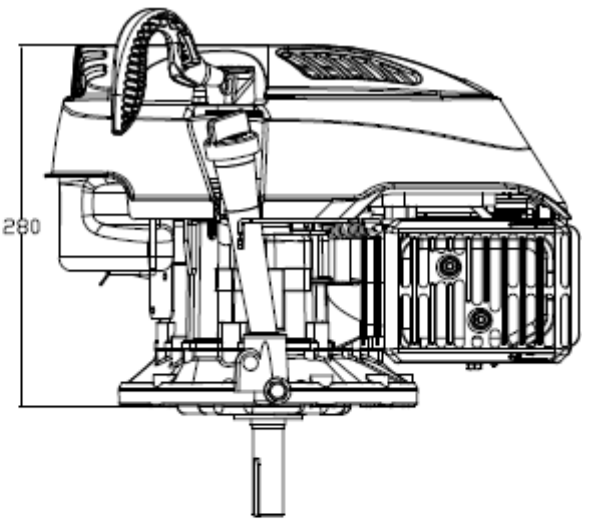

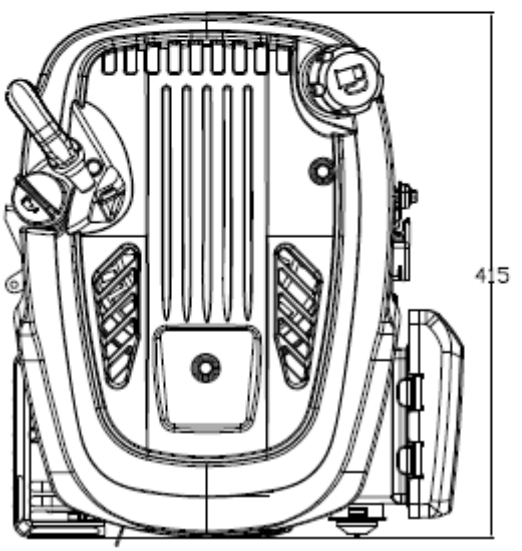

2-2 The Position Of Installing Hole

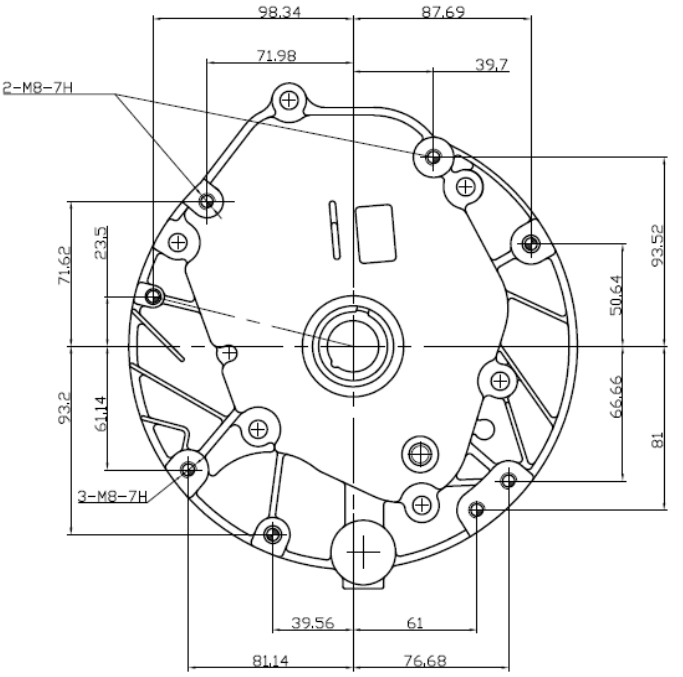

2-3 PTO Installing Drawing

Q161 Shaft

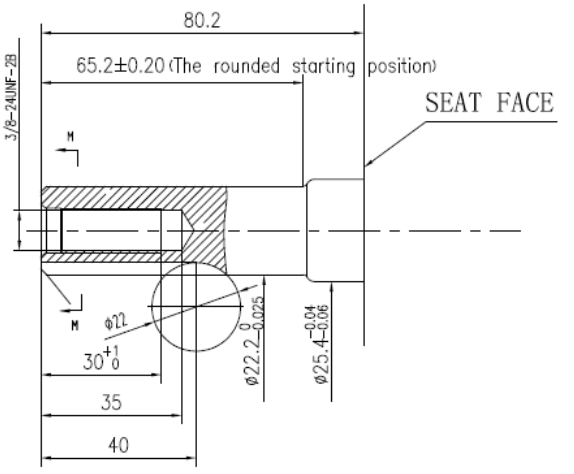

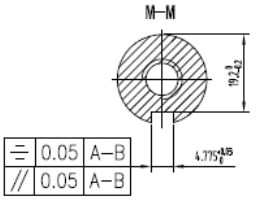

2-4 Torque Value

ITEMS	FASTENERS	TORQUE VALUE (Nm)
Connection-Rod Bolt	M7×32	15±0.5
Governor Gear Bolt	M6×12	11±1
Crankcase Cover Bolt	M8×50	26±2
Spark Plug	M14-1.25	18±2
Cylinder Head Bolt	M8×50	26±2
Rotation Shaft Locked Nut	M6 × 0.5	11±1
Cylinder Head Cover Bolt	M6×14	10±2
Ventilation Chamber Cover Bolt	M6×12	7±1
Side Shield Bolt	M6×10	10±2
End Shield Bolt	M6×10	10±2
Brake Bolt	M6×35	11±1
Flywheel Nut(Cast Iron)	M14×1.5	80±6
Ignition Wire Bolt	M6×25	11±1
Fuel Tank Support Bolt	M6×12	10±2
Fuel Tank Bolt	M6×22	8±1
Recoil Starter Reel Nut	M6	10±2
Throttle Control Sub Assemble Bolt	M6×10	10±2
Air Cleaner Nut	M6×1.0	10±2
Muffler Cover Nut	M6×1.0	10±2
Engine Cover Nut	M6×1.0	10±1
Drain Plug	M10 × 1.25	18±2

NOTICE For unspecified bolt, screw and nut, refer to the standard torque value.

2-5 Standard Torque Value

FASTENERS	SPECIFICATION	TORQUE VALUE(N·m)
Bolt, Nut	5mm Bolt, Nut	4.5-6
	6mm Bolt, Nut	8-12
	8mm Bolt, Nut	18-25
	10mm Bolt, Nut	29-34
	12mm Bolt, Nut	49-59
	4mm Screw	1.5-2.6
	5mm Screw	3.5-5
	6mm Screw	7-11
	5mm Flange Bolt	3.6-6.9
	6mm Screw	7-11
	5mm Flange Bolt	3.6-6.9
	6mm Flange Bolt	10-14
	8mm Flange Bolt	20-26
	10mm Flange Bolt	35-45

3. MAINTENANCE

3-1 Maintenance Schedule

FREQUENCY / ITEM		EACH TIME	FIRST MONTH OR 20 HRS	EACH SEASON OR 50 HRS	EVERY 6 MONTH OR 100 HRS	EACH YEAR OR 300 HRS
Engine Oil	Oil Level Check	√				
	Replace		√		√	
Air Cleaner	Check	√				
	Clean Replace			√		
Oil Alert System	Check	√				
Spark Plug	Clean, Adjust				√	
	Replace				√	
Oil Strainer	Clean				√	
Valve Clearance	Check-Adjust					√*
Cylinder Head	Clean					√*
Fuel Tank	Replace	Every three years				

***These items should be serviced by company authorized dealer, unless you have the proper tools and mechanically proficient.**

3-2 Engine Oil

⚠ CAUTION

● Engine oil is a key factor in deciding the engine's performance. Do not apply engine oil with additives or 2-stroke gasoline engine oil, because they haven't enough lubrication, and may shorten the engines service life.

● Check the engine with it stopped on a level ground.

● Engine oil capacity: TREX Y173V 0.6L

Engine oil recommended: SAE 10W-30

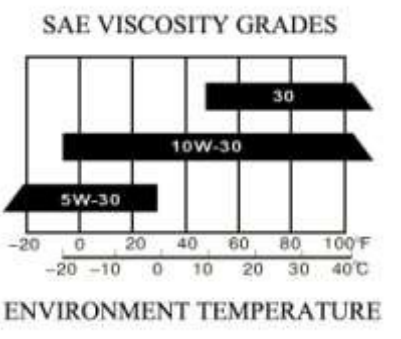

When the temperature in your area is in the frame of the above chart, you can use other viscosity of engine oil.

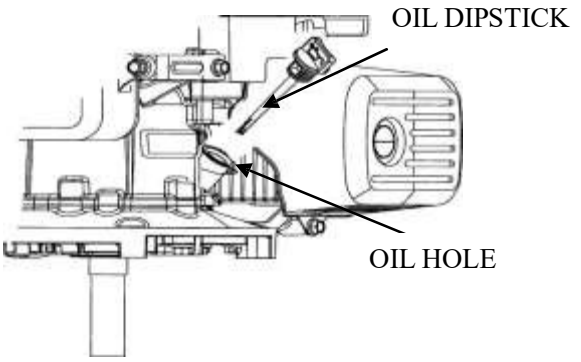

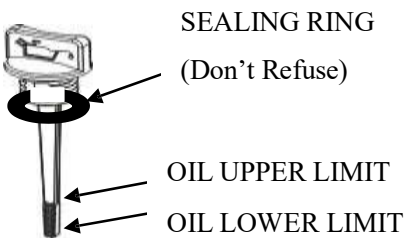

CHECK METHOD

1. Remove the dipstick and clean it.
2. Reinsert the dipstick into the oil filling hole without screwing it, and check oil level.
3. If the oil level is too low, add the recommended engine oil up to the oil upper limit.
4. Reinstall the dipstick.

OIL CHANGE

⚠ CAUTION

- Used engine oil contains substances that have been identified as carcinogenic. If repeatedly left in contact with the skin for prolonged periods, it may cause skin cancer. Wash your hands thoroughly with soap and water as soon as possible after contact with used engine oil.
- Please dispose of used oil in manner that will pollute the environment. We suggest you take it in a sealed container to your local service station or recycling center for reclamation. Do not throw it in the trash or pour it on the ground.

a) Screw the oil dipstick off.
b) Tilt the engine to drain the oil from the hole.

3-3 Air Cleaner

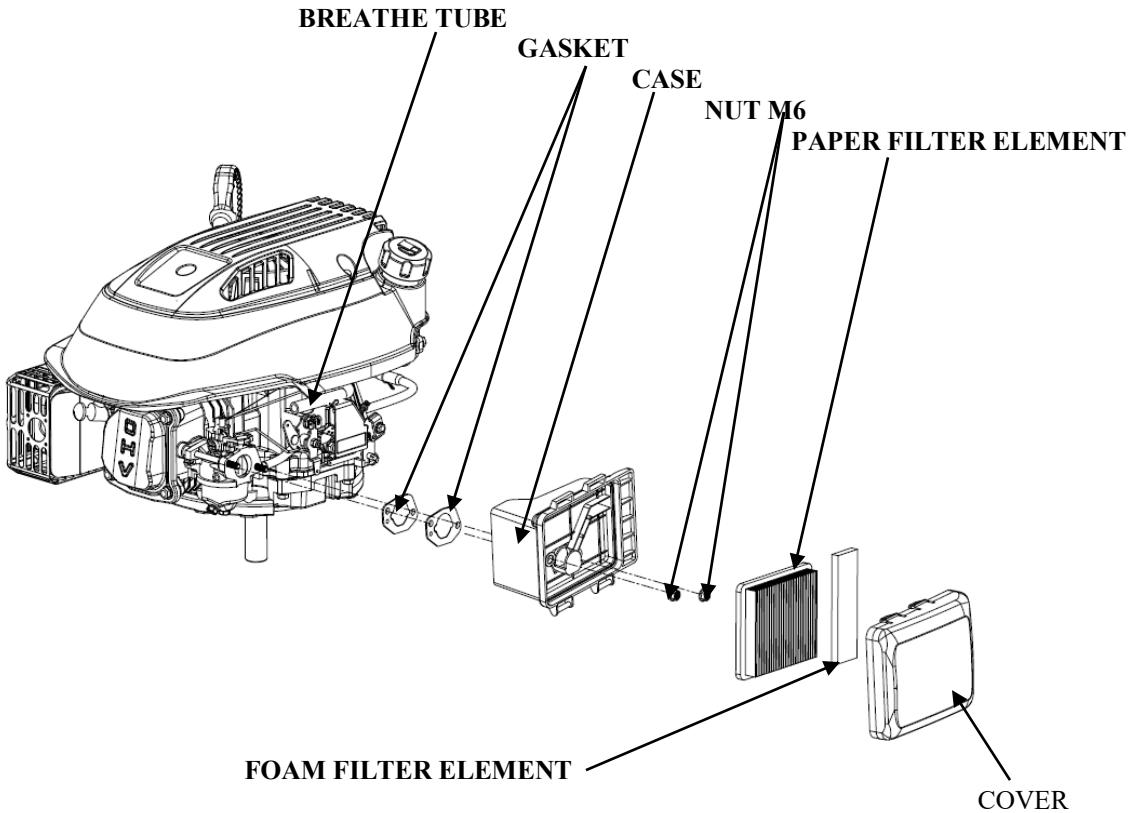

Wash the engine each 50 hrs (or 3 months). (Wash more frequently in dust area)

- Remove the air cleaner cover and take the element out.
- Change the damaged element.
- Clean the element before reusing.

Clean the element：

Foam Element	Wash the element with detergent and dry it.
	Immerse the element into the oil and squeeze the excessive oil. The element should be wet, but not drop the oil.
Paper Element	Blow the compressed air from the inner side or lightly tap to move the dust. If dirty badly, replace in time.

- Be careful to prevent dirt from entering the air duct that leads to the carburetor.
- Place the foam element over the paper element, and cover the case cover on.

3-4 Wash The Strainer

⚠ WARNING **Don't smoke or use fire near the flammable solvent.**

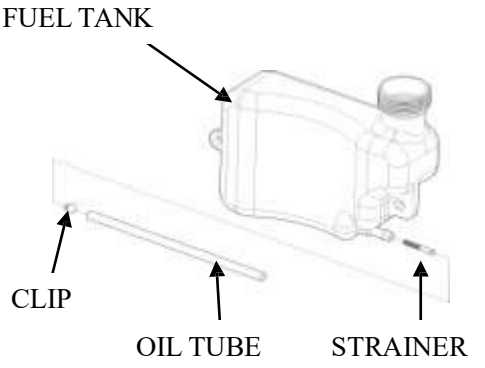

a) Fill the fuel into the container
b) Remove the fuel tube, screw the strainer bolt off.
c) Check the strainer for damage and clean the strainer.
d) After Cleaning, install the strainer on the fuel tank and connect the fuel tube.
e) Check for leaking.

3-5 Spark Plug

a) Remove the spark plug cap. Clear away dirt around the spark plug base
b) Dismantle the spark plug with a spark plug wrench.

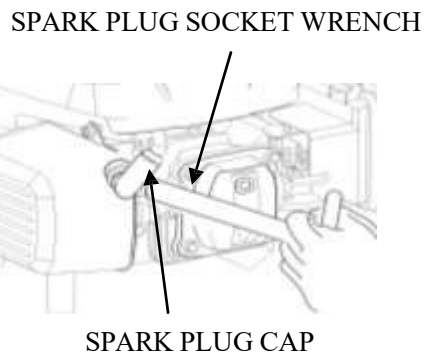

c) Visually check the spark plug. Clean with a Steel brush. If the insulator is damaged, replace the spark plug instead.



d) Measure the spark plug clearance with a feeler. The clearance should be 0.7~0.8mm. If adjustment is necessary, bend the side electrode carefully.

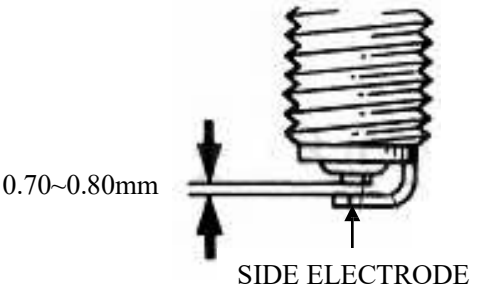

e) To avoid cross-threading, first, screw in spark plug by hand, then tighten with a spark plug wrench to compress the gasket.

f) If a new spark plug is used, more twist 1/2 turns after compressing the gasket.

g) If reinstalling the used spark plug, just more twist 1/8-1/4 turns.

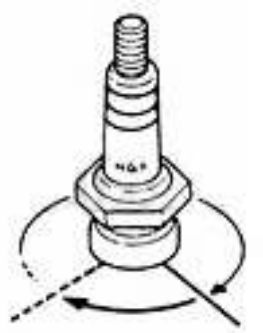

Spark plug torque value：18±2Nm

Spark Plug Type： F7TC

⚠ CAUTION The spark plug must be tightened securely, or it may become very hot to damage the engine. Only use recommended spark plug or the equivalent. Incorrect heat range of the spark plug may damage the engine.

3-6 Valve Clearance Adjustment

⚠ CAUTION Measure the valve clearance in the cold of the engine state.

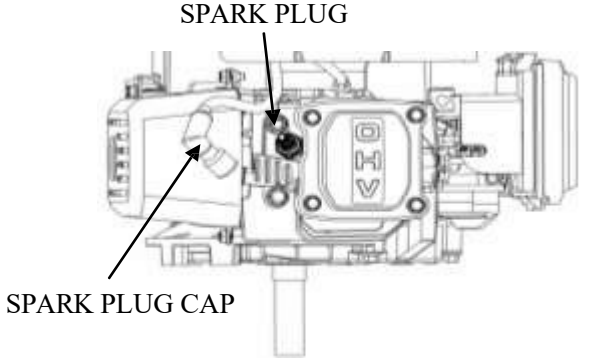

a) Remove the bolt（M6×14）, cylinder head cover, gasket, spark plug cap and spark plug.

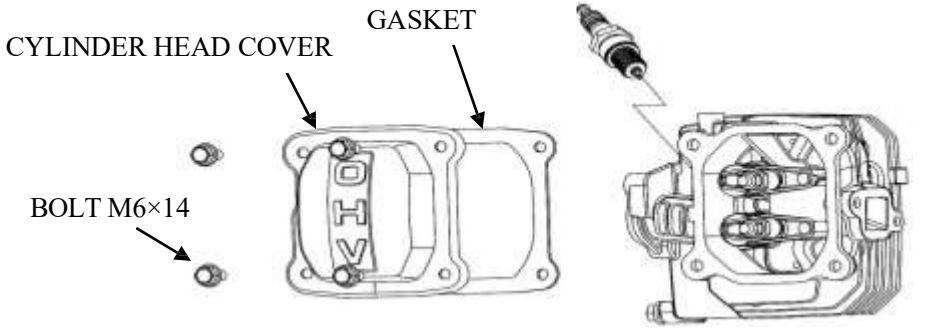

⚠ CAUTION

After the cylinder head cover is removed, engine oilmay flow. Be sure to wipe up any flowed oil.

b) Pull the starting rope lightly and set the piston at top dead center of the compression stroke (Insert a feeler gauge between the rocker arm and valve to measure the valve clearance).

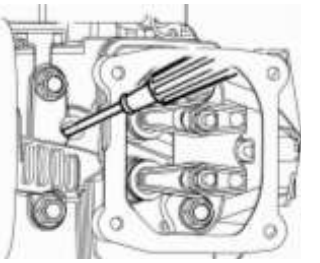

c) Measure the valve clearance with feeler.

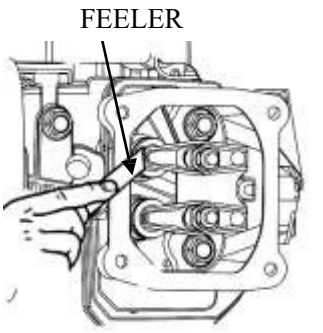

d) Valve clearance adjustment method:
Loose the locking nut, turn the adjusting nut to get the correct valve clearance. Screw down the locking nut. Torque value：10N.m

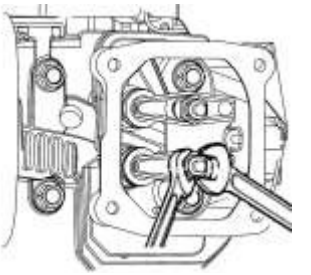

e) Recheck the valve clearance

f) Set the new gasket with the projection of the cylinder head

g) Install the cylinder head cover and tighten the four bolts to the specified torque.

Torque value ： 6N.m

Standard Valve Clearance	
Intake Valve	0.10±0.02mm
Exhaust Valve	0.15±0.02mm

Adjusting Nut	Value Clearance
Screw Down	Decreasing
Screw Off	Increasing

⚠ CAUTION

Clearance too big: Intake and exhaust valve opening delay will shorten the intake and exhaust time, lower the opening height of the valve and change normal distributing phase to result in power lowering from the intake lack and exhaust uncompleted. Furthermore, also make vale train parts knock increasing and wearing quickly.

Clearance too small: After running, engine parts will be heated to expand and push the valve open, which will make the engine not closing tight and result in leaking, power lowering, serious carbon deposit or burn on the valve surface, even valve impacting the piston.

3-7 Governor

Governor adjustment

a) Remove the air cleaner.

b) Loosen the nut (M6). Be sure that the carburetor throttle valve is fully open.

c) Rotate the governor support shaft fully to the right (governor fully closed position), and tighten the nut.

TORQUE VALUE: 10-12N.m

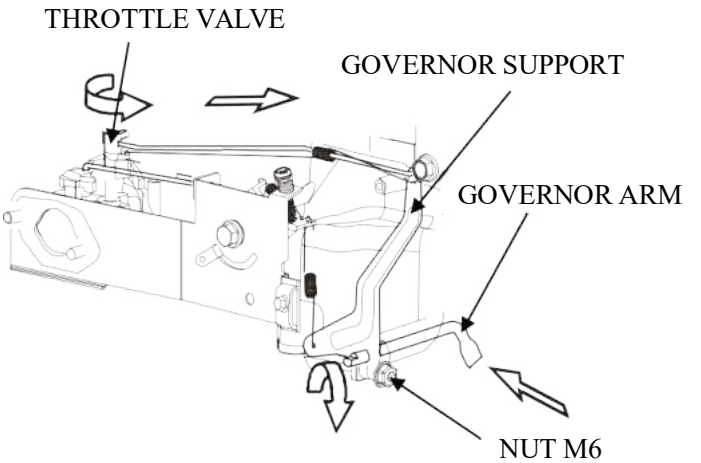

d) Check to see that the governor support and throttle valve move freely.

e) Check the maximum engine speed

Maximum Speed Adjustment

a) Start the engine and allow it to warm up to normal operating temperature.

b) If the maximum speed not conforming to specified value, adjust the adjusting bolt M4×30.

Engine maximum speed：2850±100rpm

Speed too big	Turn the bolt counterclockwise.
Speed too small	Turn the bolt clockwise

4. DISASSEMBLING AND SERVICING

4-1 Troubleshooting

4-1-1 Starting Difficult

TROUBLE			CAUSE		REMEDY
Normal cylinder compression	Normal spark plug spark	Something wrong with the fuel system.	Fuel supply is not smooth or no fuel supply.	There is no enough fuel in fuel tank and fuel cock is closed.	Fill fuel, open fuel cock.
				Air vent in the fuel filler cap is clogged	Dredge air vent.
				Improper or clogged main oil flow hole.	Readjust or clean, blow to get through.
				Needle valve is not closed properly or start hole is clogged.	Dismantle needle valve and repair, clean, blow to get through.
				Float is damaged or sticking.	Repair float
			Fuel supply is normal.	Fuel is too filthy or deteriorated	Replace
				There is water in fuel.	Replace
				Too much fuel in engine	Drain extra fuel, dry up spark plug electrodes.
				Wrong fuel brand	Select proper fuel brand corresponding with the requirements.
	Normal fuel supply system.	Normal high –tension line spark.	Spark plug is in bad conditions	Too much carbon deposit and dirt around electrodes.	Clear away.
				Electrodes are burn damaged seriously or insulators damaged.	Replace spark plug.
				Improper electrodes gap.	Adjust to proper value.
		High-tension line no spark	Normal spark plug	High –tension line is damaged.	Replace
				Ignition coil is damaged.	Replace
				Magneto loses magnetism.	Replace
				Abnormal gap between the ignition coil and flywheel.	Adjust gap

TROUBLE			CAUSE	REMEDY
Abnormal cylinder compression.	Normal fuel supply system.	Normal spark plug.	Piston ring is worn to or even over its wear limit	Replace
			Piston ring is broken.	Replace
			Piston ring is sticking.	Clear up carbon fouling.
			Spark plug is not installed tighten or without a gasket.	Tighten with a gasket in.
			Air leakage between cylinder block and cylinder head.	Check cylinder gasket, and the flatness of the surface by which cylinder block contacting with cylinder head
				Tighten cylinder head bolts in stipulated order to stipulated torque.
			Air leakage in the valves	Check valve. Clearance and tightness, repair if necessary.

If still can't starting, have the engine to our authorized dealer for repairing.

- **Spark plug testing**

- **Make sure there is no spilled fuel outside the engine and that the spark plug isn't dipped with fuel.**
- **When testing the spark plug, never hold the high- tension line of the spark plug with wet hand.**
- **To prevent fire, keep sparks far away from the spark plug mounting hole.**

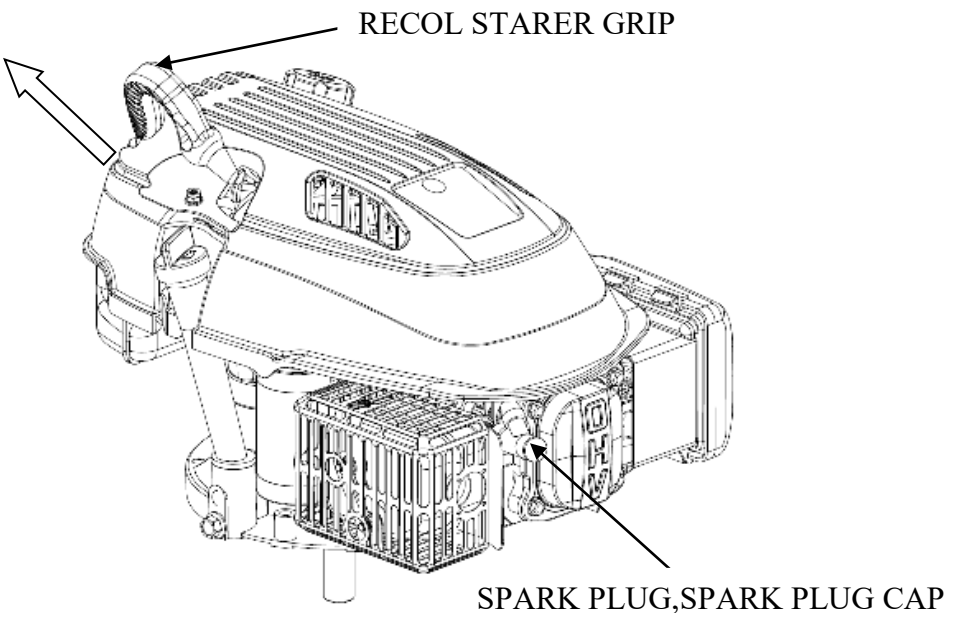

- Turn the fuel cock to “OFF” position, and drain the gasoline of the carburetor.
- Remove the spark plug and spark plug cap
- Pull the recoil starter grip to drain the gas in the cylinder.
- Install the spark plug cap.
- Put the control lever to “low” position.
- Pass negative pole (thread) of the spark plug through cylinder cover to connect grounding and pull the recoil starter grip to observe the spark.

4-1-2 Power Lack

TROUBLE	CAUSE		REMEDY
When increasing the throttle, speed increase slow or even decrease and stop running	Ignition System Fuel Supply System	Air in fuel line or fuel line clogged.	Exhaust air or dredge fuel line
		Main oil flow hole is not adjusted properly.	Readjust
		In carburetor, needle valve hole and main oil flow hole clogged.	Clean and blow to get through
		Fuel cock is clogged up.	Clean, replace damaged part
		Too much carbon deposit in combusting chamber.	Clear away
		Too much car bon fouling in muffler and exhaust pipe.	Clear away
		Air cleaner is clogged up.	Clean air cleaner filter element
		Intake pipe is leaking.	Repair or replace
	Poor Compression	Piston or cylinder or piston ring is worn	Replace the worn
		Air leakage from the surface by which cylinder block contacting with cylinder head.	Replace cylinder gasket
		Too big or too small valve clearance.	Readjust
		Valve tightness is poor.	Repair

- Drain the oil of the fuel tank out.
- Drain the gasoline by loosening the oil drain bolt of the carburetor.
- Remove the spark plug cap and spark plug and install the cylinder pressure meter.
- Forcibly pull the recoil starter several times and measure compression force. (**Compression Force：** 1.40Mpa/1300rpm)

CYLINDER PRESSURE METER

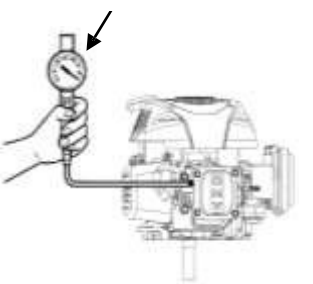

4-1-3 Speed Unstable

TROUBLE	CAUSE	REMEDY
Knocking Sound	Piston, cylinder or piston ring is worn excessively.	Replace the worn
	Piston pin and piston pin hole are worn excessively.	Replace piston or piston pin
	Tie rod small head is worn excessively.	Replace tie rod
	Roller bearing for crankshaft main shaft is worn.	Replace roller bearing
Abnormal Combustion	Engine is too hot	Shoot trouble
	Too much carbon deposit in combustion chamber	Clear away
	Improper gasoline brand or low gasoline quality	Replace with qualified gasoline
Spark Lacking	There is water in float chamber	Clean
	improper spark plug electrodes clearance	Adjust
	Something wrong with induced coil, and so on	Check and replace damaged parts

4-1-4 Unable Igniting

TROUBLE	CAUSE		REMEDY
Unable Igniting	Fuel Supply System	Fuel is finished	Refill fuel
		Carburetor is clogged	Check fuel line and dredge
		Float is leaking	Repair
		Needle valve is locked	Dismantle float chamber and eliminate it
	Ignition System	Spark plug is punctured, or short-circuited by carbon deposit	Replace spark plug
		Side electrode of spark plug is dropped out	Replace spark plug and clean the cast
		High-tension wire is dropped out	Weld on
		Ignition coil is punctured or short-circuited	Replace ignition coil
		Parking wire is located on engine body	Find out meeting and insulate
	The Other	Cylinder is seriously scored and valve dropped out	Repair or replace damaged parts

4-1-5 Gasoline Engine Is Overheat

TROUBLE	CAUSE	REMEDY
Gasoline Engine Is Overheat	Oil insufficient in the gasoline	Refill engine oil
	Exhaust pipe blocked up	Clean exhaust pipe
	Shroud leaking	Repair damaged part
	Cooling fins blocked by foreign matter	Clear cooling fins
	Connection rod deformation to make piston and cylinder bushing side wear	Replace connection rod
	Cylinder or piston or piston ring is worn to make hunting between cylinder and crankcase	Replace the worn parts
	Improper adjustment of engine governor to produce speed high.	Readjust engine governor
	Crankshaft main bearing burnt out	Replace main bearing

4-1-6 Abnormal Sound

TROUBLE	CAUSE	REMEDY
Beating sound	Piston, piston ring or cylinder is worn	Replace the worn part
	Connection rod or piston pin and piston pin hole are worn	Replace the worn part
	Crankshaft main neck is worn	Replace bearing
	Piston ring is broken	Replace piston ring
Metal beating sound when abnormal combustion occurs	Too much carbon deposit in combusting chamber	Clear away carbon deposit
	Improper fuel brand	Replace fuel
	Engine is overheat	Find a cause and eliminate it
The other	Improper valve clearance	Readjust valve clearance properly
	Fly wheel is not connected with crankshaft tightly	Connect tightly

4-2 Preparation Of Servicing

4-2-1 Safety Precautions

⚠ WARNING

Indicate a possibility of invalid warranty and personal or equipment damage if instructions are not followed.

Please pay special attention to the following:

1. Strictly set the engine according to the regulated power on the nameplate. Do not overload, overrun the engine or run it with low load and at low speed in a long time.
2. Use regulated brand of gas and diesel. The fuel should be fully deposited and filtrated before use. Keep clean the fuel filler, change the oil periodically.
3. Periodically check the installation, connection and the degree of tightness of the fixed bolt. Tighten it if necessary.
4. Periodically clean the element of the air cleaner, change it when necessary.
5. The engine is air-cooled, so clean the radiator, wind cover and fan in time in order to make the engine cool normally.
6. The operator should be familiar with the working principle and structure of the gasoline engine, knowing how to make an emergent stop and the operation of all controlling parts. Any one without training is forbidden to operate the engine. Keep periodical maintenance. Solve problems in time. Do not run the engine in spite of malfunction.
7. Running the engine in a well-ventilated place, keep it at least one meter away from building walls or other equipments, keep away from inflammables such as gasoline, amtmatches and so on to avoid possibility of fire.
8. Refuel in a well-ventilated area with the engine stopped, and in places refueling or storing gasoline, no smoking and any flames or sparks.
9. Refuel the fuel tank not too full so as to avoid fuel's spilling out. If there is spilled fuel around, be sure to clean it thoroughly before starting.
10. Do not run the engine in airtight or ill-ventilated places.
11. The exhaust muffler is very hot during running the engine even after the engine stops. Never touch it, or you may get burns. Transport or store the engine with it cooling down entirely.

4-2-2 Special Tools

TOOL NAME	APPLICATION NOTE
Float lever gauge	Carburetor float level inspection
1. Valve guide driver	Valve guide removal, installation.
2. Retainer assembler	Assembling ball bearing
3. Assembler handle	Installing handle and bearing
4. Inner retainer assembler	Assembling ball bearing and time.
5. Diamond lap 450	Rectifying valve seat surface.
6. Diamond lap 320	Rectifying valve seat surface.
7. Flywheel driver	Dismounting flywheel
8. Bearing extractor	Dismounting flywheel
9. Valve guide reamer	Fine reaming the guide inner hole.

4-3 Dismounting Chart

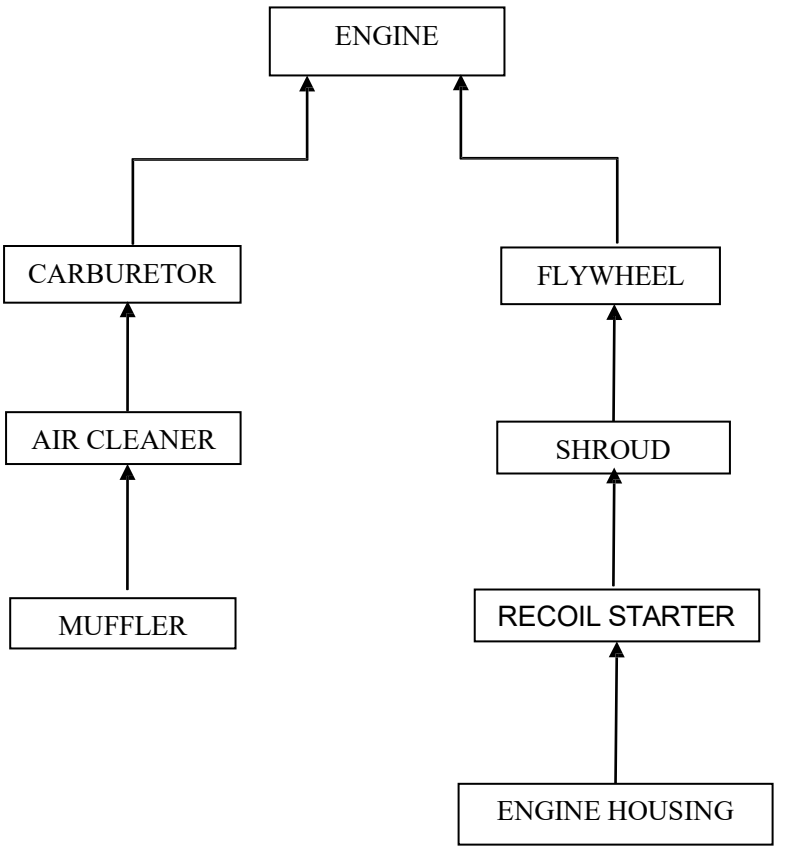

4-4 Gasoline Engine

4-4-1Recoil starter / fan cover

Removal：

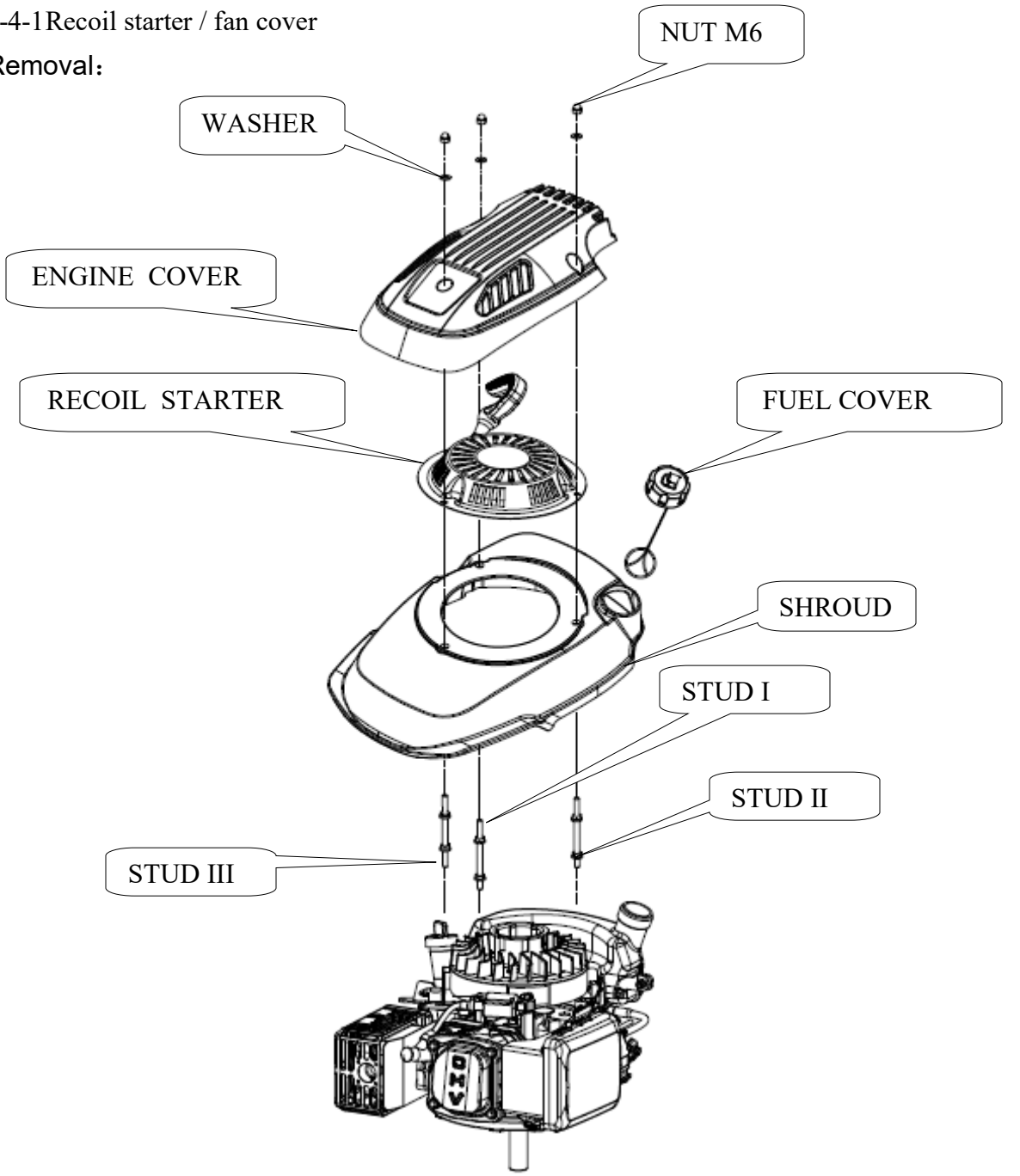

NOTICE **Wear gloves and eye protection during disassembly, and take care not to allow the return spring to come out.**

Installation Instruction

① Pass the recoil starter rope through the rope in the recoil starter pulley and make a figure-eight knot at the rope end.



NOTICE **Check the rope foe wearing and broken before reassembling, then, install it.**

② Hang the side hook of the recoil starter spring in the groove of the recoil starter case, set the recoil starter spring into the case with counterclockwise rotating starter spring.

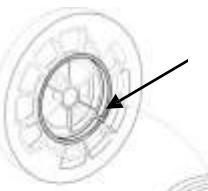

REEL COVER GROOVE

③ Set the recoil starter spring outside hook into the groove of the recoil starter pulley.

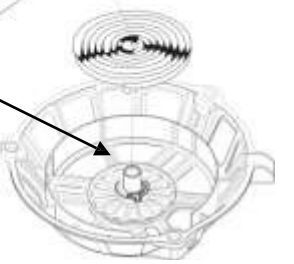

④ Set the starter drive cam on the recoil starter pulley, and install the return spring on the recoil starter pulley while hooking it on the side of the driving cam.

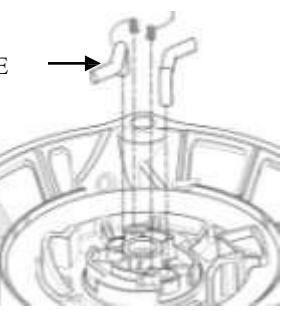

⑤ Install the spring, drive guide and fixing screw in order and tighten to the specified torque.

Screw torque value：10±2 NM



⑥ Pass the recoil starter rope through the recoil starter case and recoil starter grip, and make a figure-eight knot at the rope end.

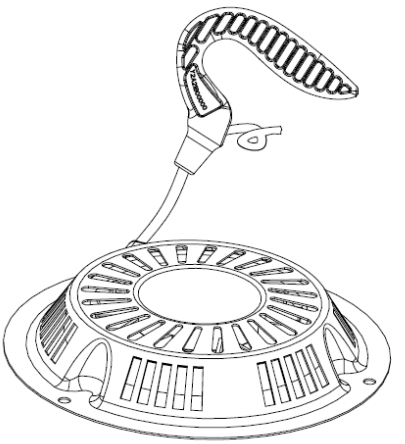

⑦ Pull the recoil starter rope lightly to check the drive cam for function.

4-4-2 Muffler

Removal / Installation

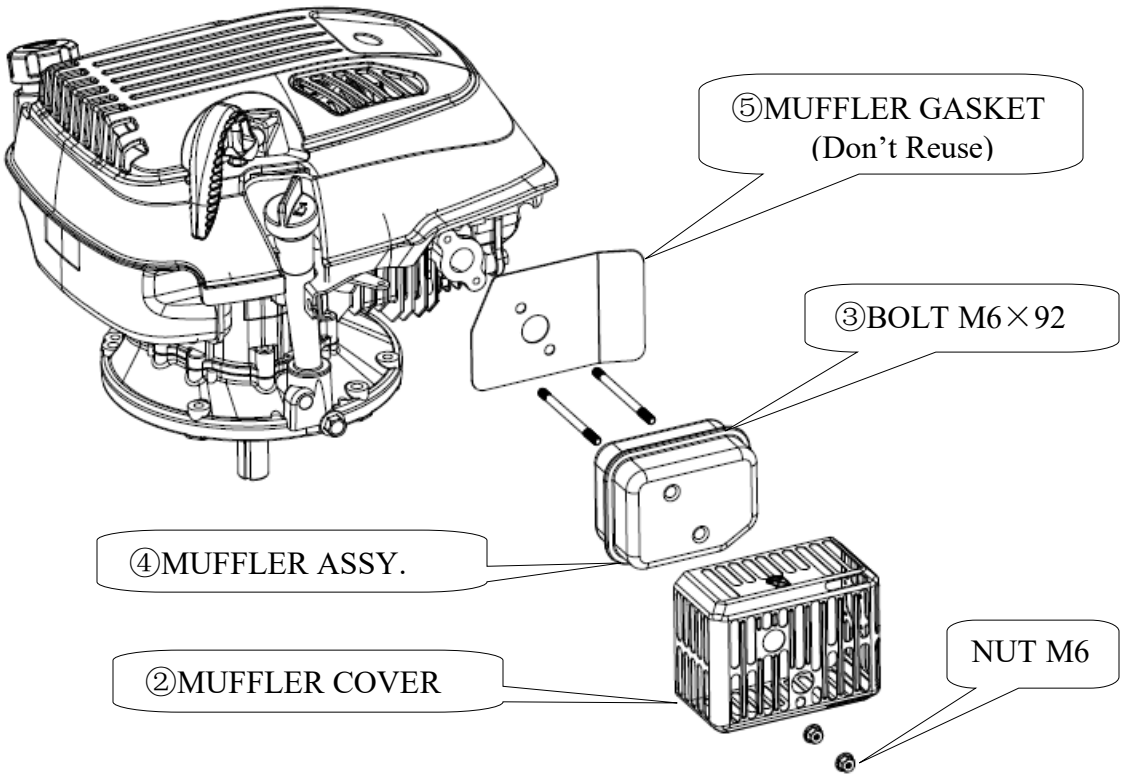

Disassemble the muffler as shown on the figure.

The muffler can produce carbon deposits in the long time operation and seriously trouble the exhaust system. To get the best performance, the muffler must be periodically removed the carbon deposits.

Lightly tap the muffler and blow it with compressed air in cleaning carbon deposits.

Replace it if the muffler exist in water and is seriously rusted to make noise increasing.

NOTICE **Don't clean with iron wire or the muffler material out to lower the muffler performance. Don't reuse the muffler gasket.**

⚠ WARNING **The muffler can glow heat. Please place the gasoline engine out touch of the passerby and children.**

Don't place the flammable materials near the exhaust vent during operation.

4-4-3 Fuel Tank

a) Removal / Installation

The fuel tank does not require general maintenance, but, sometimes the dusts and vapor will trouble the fuel system, so that, periodically washing it with lubrication oil and gasoline is required.

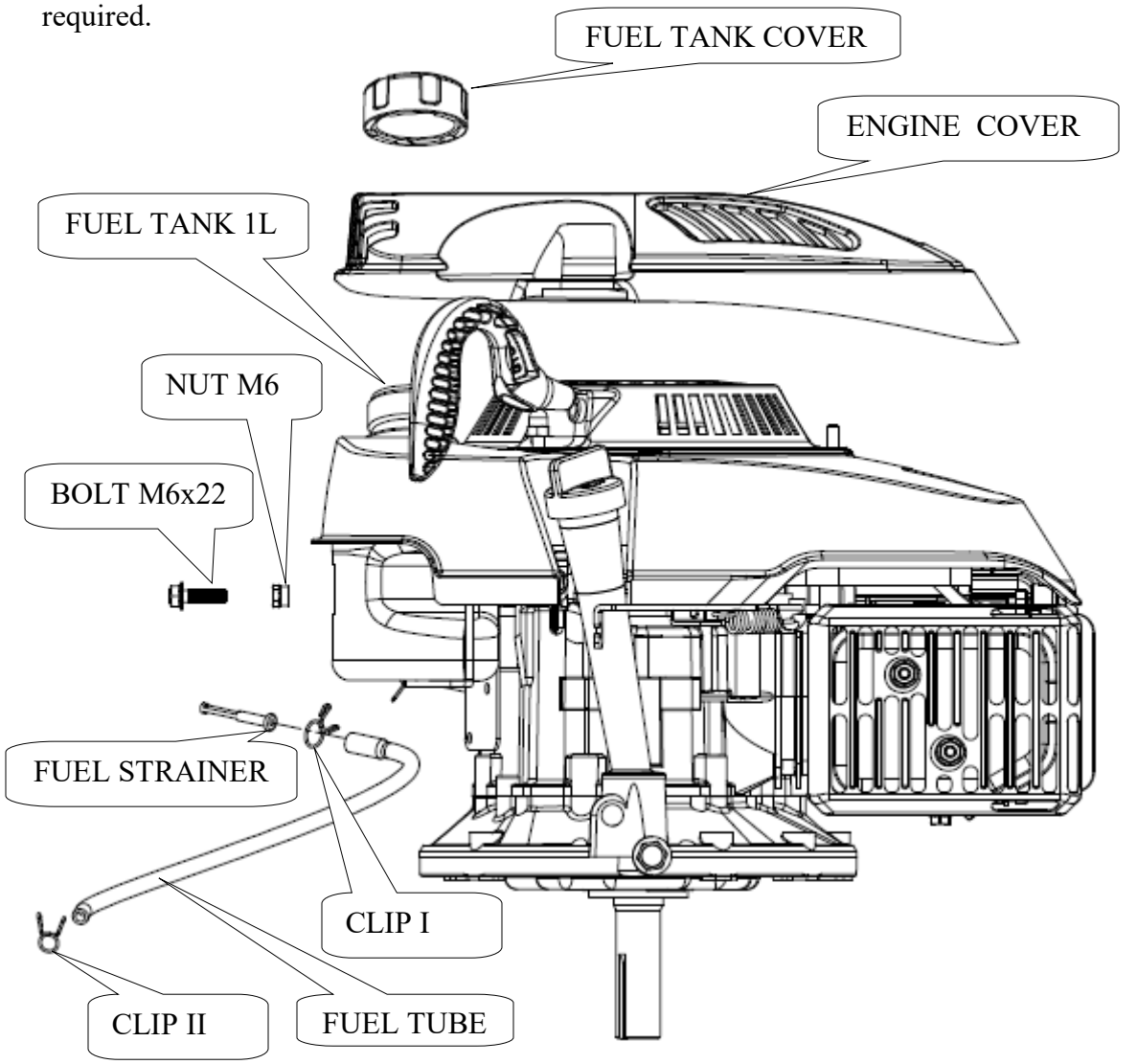

⚠ WARNING

b) Clean / Installation

- Check the fuel tube for damage or leak.
- Fill the fuel into the proper container.
- Remove nut（M6），recoil starter grip, fuel tank cover, and engine housing.

- Remove the fuel tube, screw the fuel strainer bolt off and remove the fuel tank.
- Clean the fuel tank and dry it thoroughly.
- After Cleaning, install the strainer on the fuel tank and connect the fuel tube.
- Check the fuel tank for leak.
- Install the engine housing, fuel tank cover, recoil starter grip and nut(M6)

c ） Notice

- Check fuel tank cover vent foe blocked；
- Check the fuel strainer for clogged or broken；
- Check the fuel hose for aging or cracks；
- If finding trouble, replace it in time before installation.

4-4-4 Air Cleaner

Removal /Installation

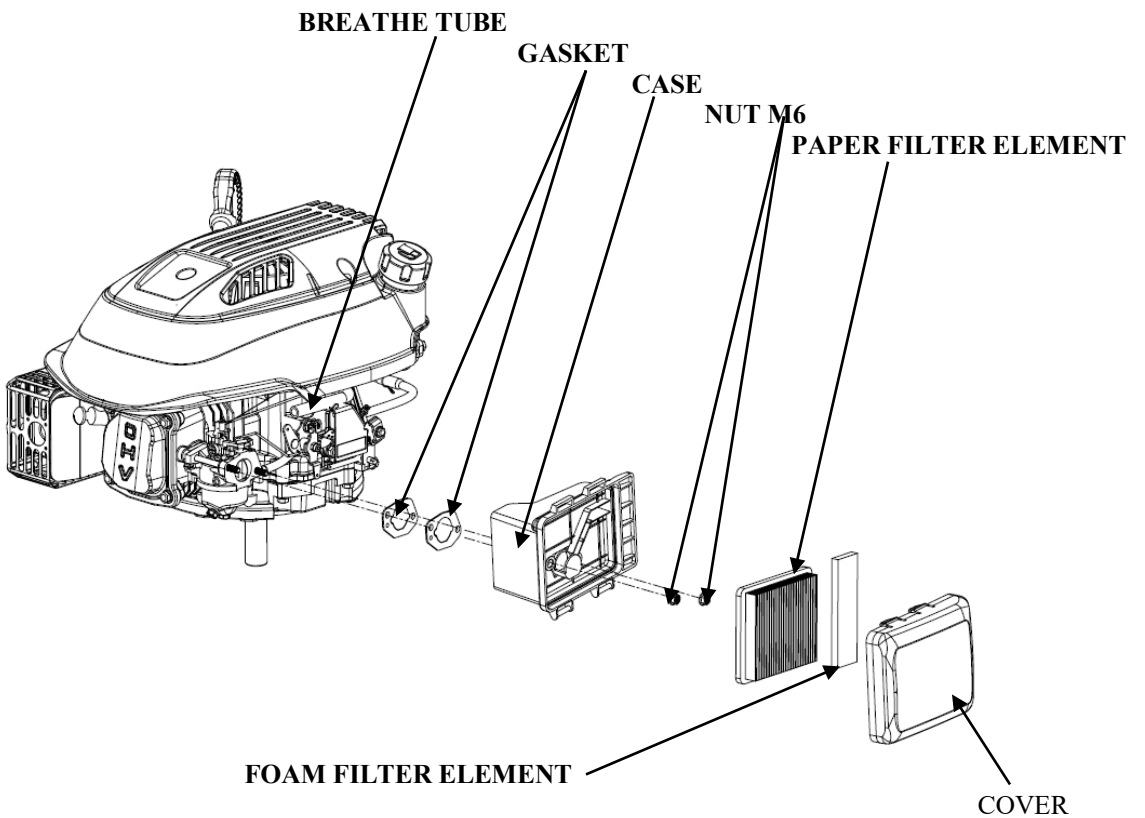

NOTICE

- Check for damage of the air cleaner and install.
- Note the installation direction, view from the air cleaner side.
- Before installing the breather tube, check for deterioration or damage. Replace if necessary. Pay attention to connect the beveled end smaller to the air cleaner case and other end to the engine.

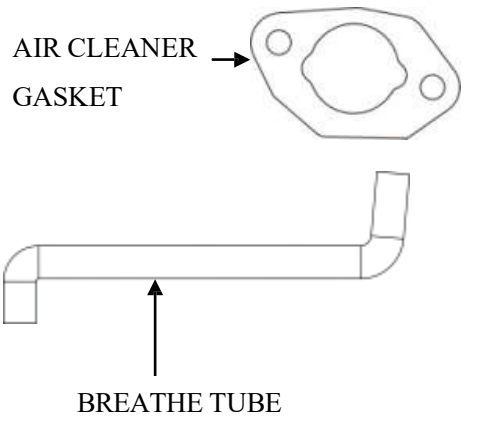

NOTICE

- **Don’t wash the foam element with the gasoline, acidity, alkalic or organic solvent**
- **Don’t pull and wrest the sponge or it will be damaged.**

⚠ WARNING

Don’t start the engine without air cleaner or the engine will be quickly worn.

4-4-5 Governor

Removal / Installation

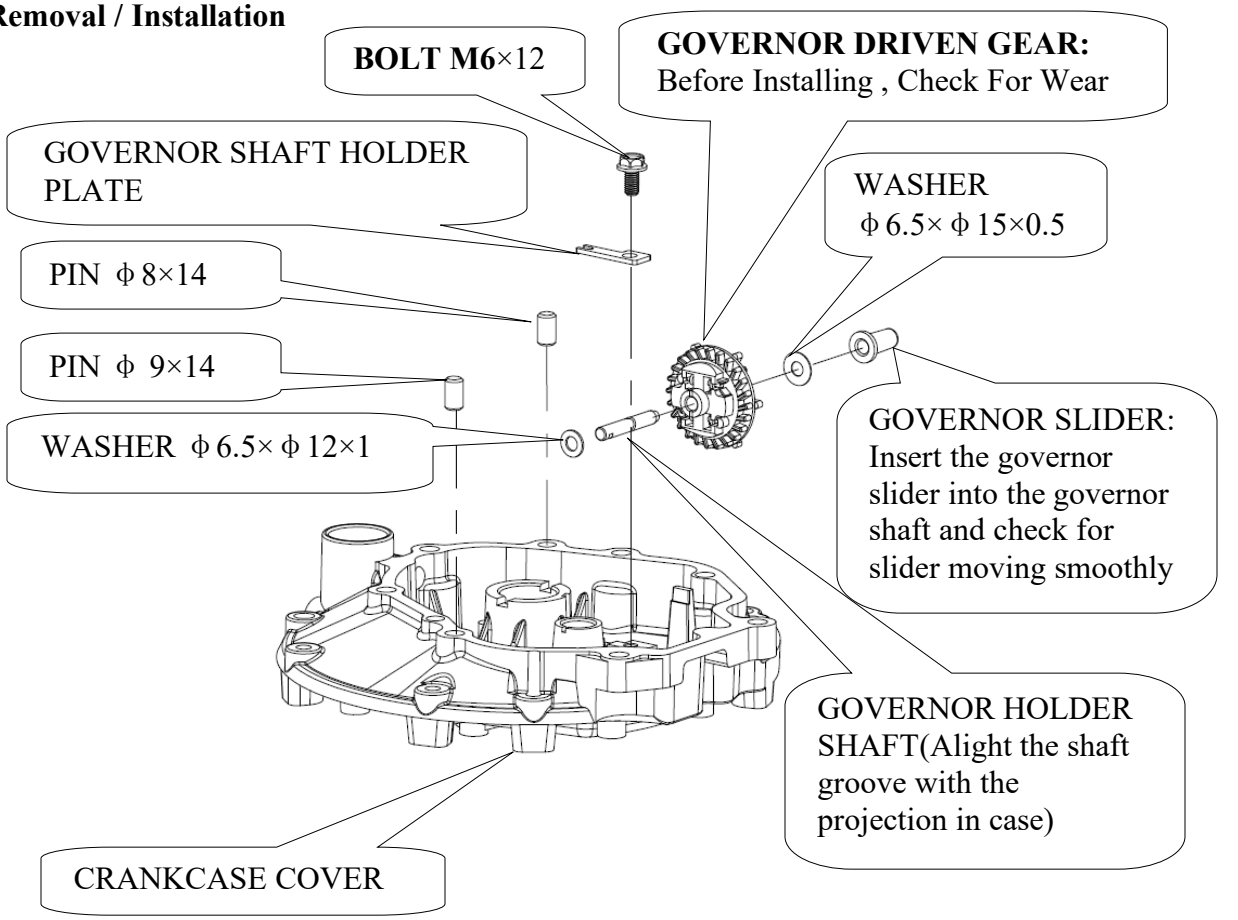

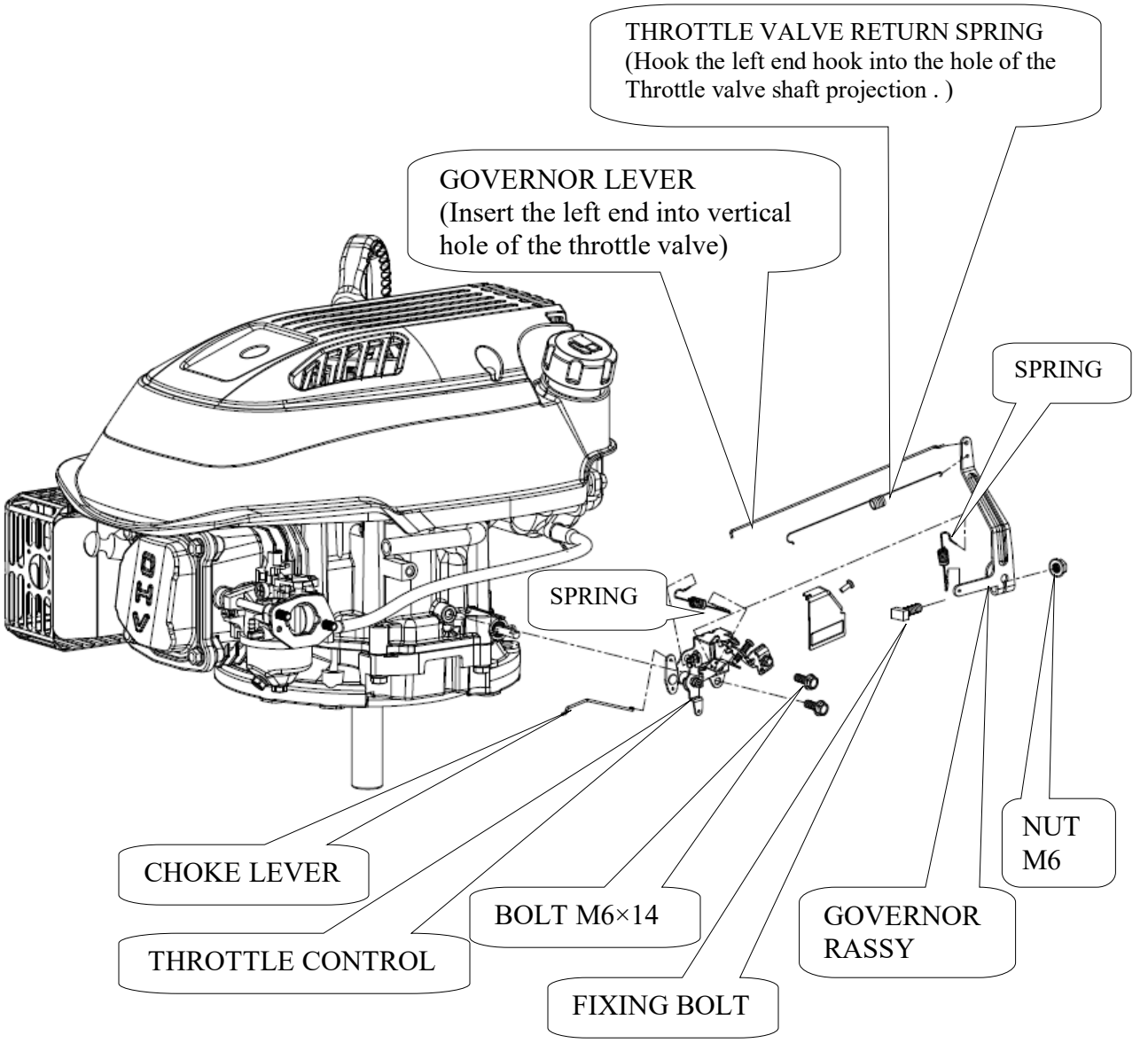
THROTTLE VALVE RETURN SPRING
(Hook the left end hook into the hole of the Throttle valve shaft projection .)
GOVERNOR LEVER
(Insert the left end into vertical hole of the throttle valve)
SPRING
SPRING
NUT
M6
CHOKE LEVER
BOLT M6×14
GOVERNOR
RASSY
THROTTLE CONTROL
FIXING BOLT

4-4-6 Carburetor

NOTICE

At high altitude, the standard carburetor air-fuel mixture will be excessively rich. Output power will decrease, and fuel consumption will increase.

Engine performance can be improved by installing a smaller diameter main fuel jet in the carburetor and readjusting the pilot screw. If you always operate the engine at altitudes higher than sea level 1000 meters over, have our authorized dealer perform this carburetor modification. If not, should lower load power in operating gasoline engine.

Even equipped with suitable carburetor, engine horsepower will decrease approximately 3.5% for each 300 meter increase in altitude. The effect of altitude on horsepower will be lowered greater than this if no carburetor modification is made.

If a carburetor suitable to high altitude is equipped with engine suitable to a lower altitude, the lean air fuel mixture will make engine output power lowering, over-heat and seriously damage.

The gasoline enters into the carburetor from the fuel tank and fuel filter. The fuel filter can filter the foreign matters in the gasoline and oxide out of the fuel tank. If having quality defectiveness, partly foreign matters will enter into the carburetor. Otherwise, the gasoline contains some composition which can form the colloid after long sediment, and attach in the carburetor parts (such as main jet) oil path and float chamber surface. The air enter into the carburetor. Through air filter, based on the intake can not be too much resistance and other factors to consider, the filter can not be too dense and therefore part of the air in the tiny impurities will enter into the carburetor through the air cleaner.

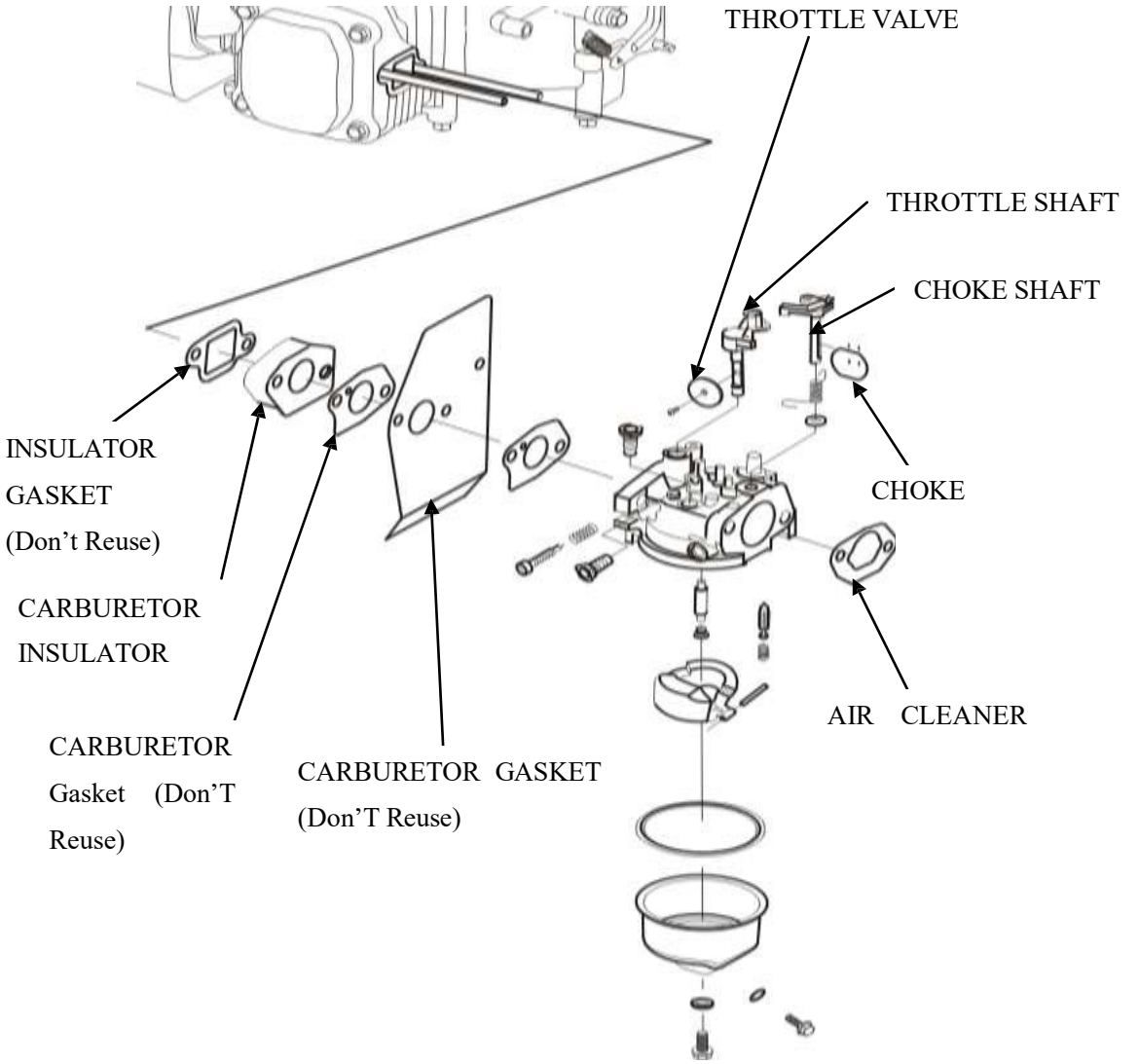

Wash the carburetor in the clean place, first, clean the outside surface, and wash the inside the parts with special carburetor detergent or industrial gasoline. Exception for washing impurities, also wash the gasoline colloid on the part surface. Blow the washed parts clean with compression air, and don't use cloth and paper against recontaminating. Don't use the steel wire and other hard material to open the blocked hole to prevent carburetor performance from changing holes diameter. Use the gasoline and compression air to clean it.

a) Carburetor disassembly：

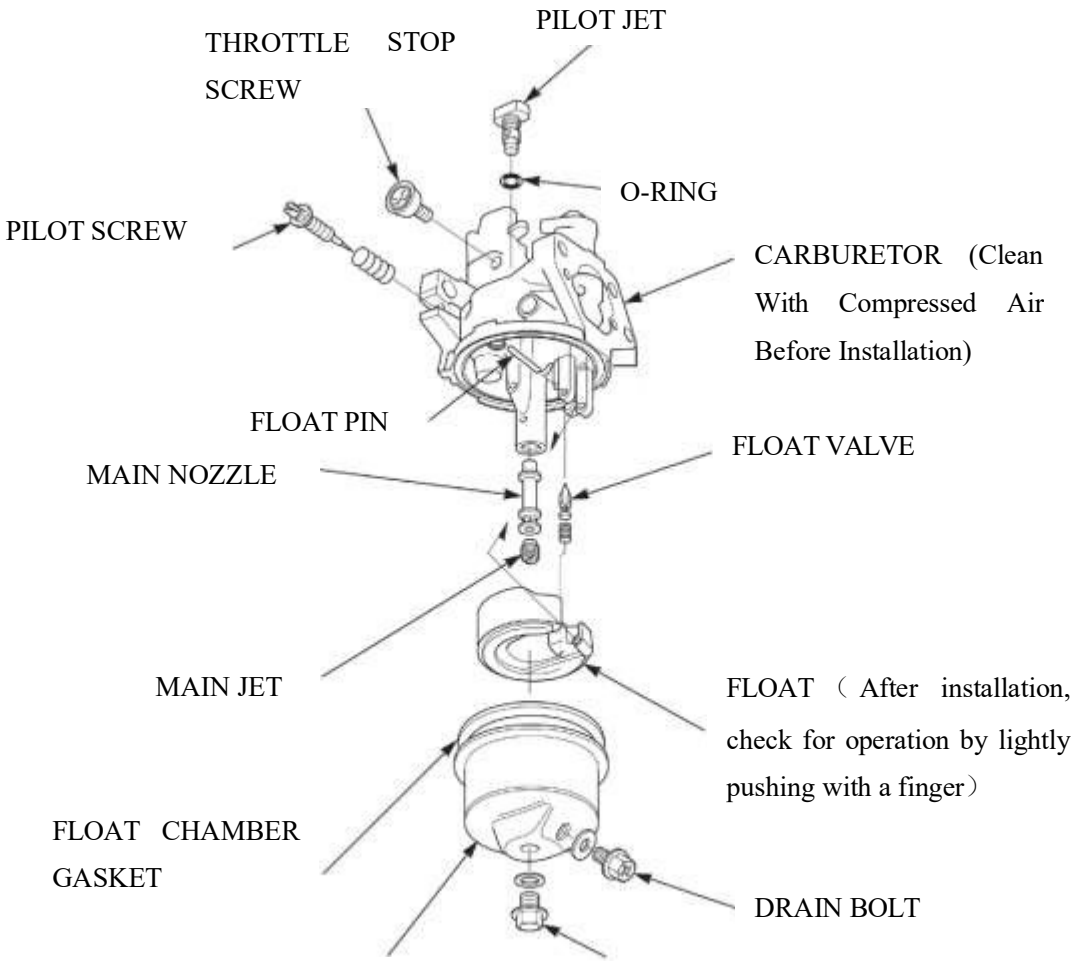

NOTICE

- **Loosen the drain bolt and completely drain the fuel out before installing carburetor.**
- **No fire.**

- Check the float valve, float seat and float spring for wear.

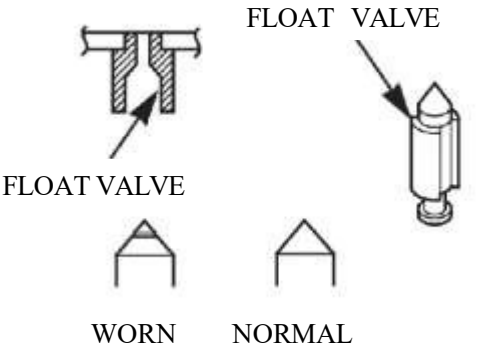

- Clean with compressed air before installation.

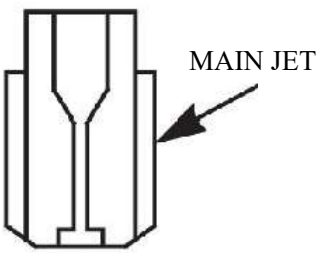

- Clean with compressed air before installation.

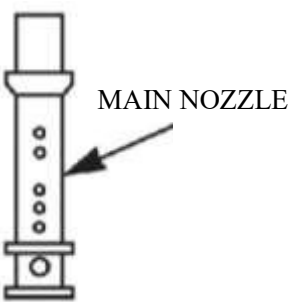

- Clean with compressed air before installation. Apply light coat of oil to the O-ring to facilitate installation.

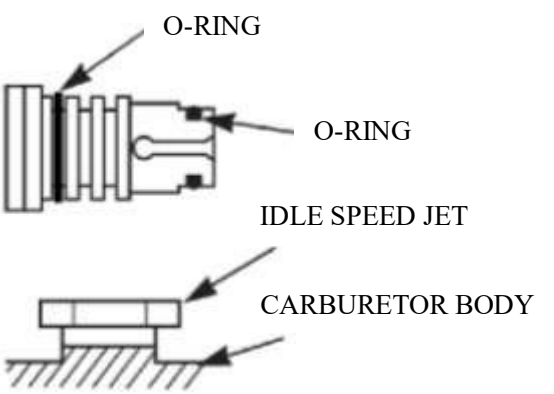

b) After washing the carburetor, reset the pilot screw back. Only repairing the carburetor can disassemble it.If the pilot screw is broken, replace with new one.

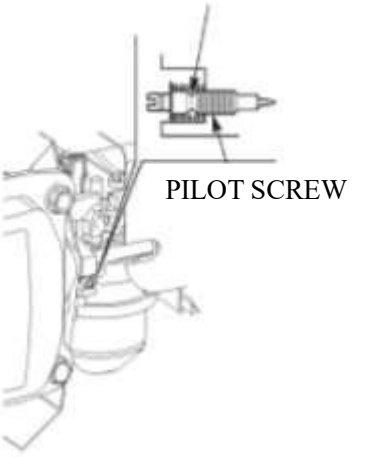

- Disassemble the broken pilot screw from the carburetor.
- Put the spring onto the replaced pilot screw and then install it onto the carburetor.
- Turn the pilot screw in until it is lightly seated the bottom of hole, then turn the screw out the specified numbers of the turns.

Pilot Screw Standard Opening State	2-5/8 turns out

c) Inspection

Float level height

Place the carburetor in the position as shown and measure the distance between the float top and carburetor body when the float just contacts the seat without compressing the valve spring.

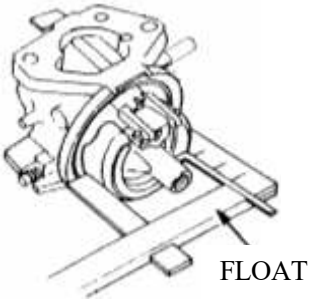

Specified Float Height	13.7mm

If the height is out of specification, replace the float valve and recheck the float height

Tool: Float level gauge.

d) Carburetor idle speed adjusting

- Start the engine to preheat it to normal running temperatu
- Adjust the pilot screw to specified idle speed.

Specified idle speed：2100±100rpm



4-4-7 Flywheel

①Removal：

a) Holding the flywheel with a commercially available strap wrench, remove the nut （M14）.

b) Disassemble the starter cut and impeller.

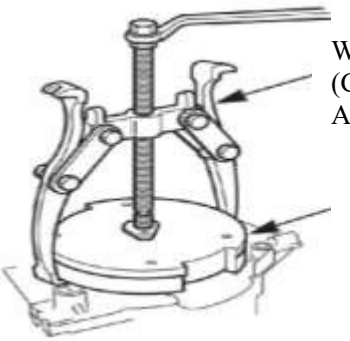

c) Remove with a commercially available flywheel puller.

NOTICE

- Do not hit the flywheel with a hammer.
- Avoid the magnet section when attaching the puller.

② Installation

a) Clean the tapered part of dirt, oil grease and other foreign material before installation. Be sure that there is no washer and other foreign material on the magnetic part.

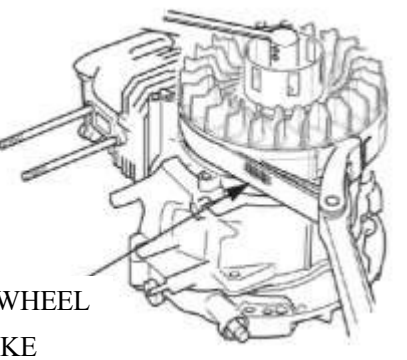

b) Set the key in the key groove.

c) Install the flywheel over the crankshaft.

NOTICE **The flywheel may push the key out of its slot, check after installation.**

Flywheel (cast iron)

- Attach by aligning the four small holes in the flywheel.
- Attach by aligning the lug on the rear side of the starter cup with the small hole at the center of the flywheel.

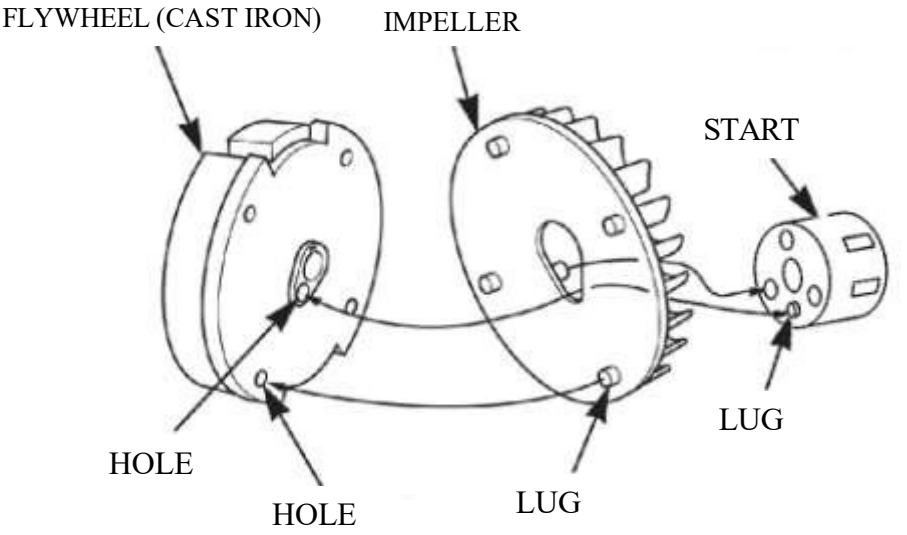

d) Apply light coat of the oil to the threads and surface of the nut, and install the nut loosely.

Torque：52N.m

③Ignition coil

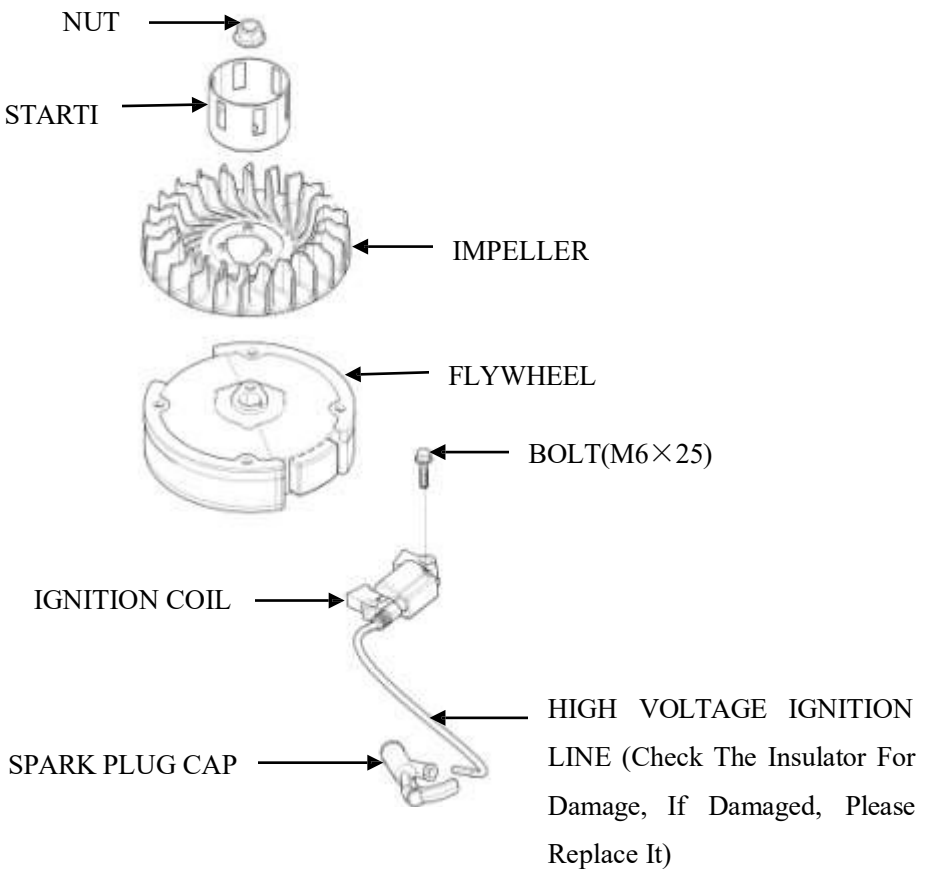

a) Remove the fuel tank, air cleaner, carburetor and recoil starter assy.

b) Measure the clearance between the ignition coil and flywheel with the feeler.

c) Adjust the clearance of the ignition and flywheel.

d) Adjusting method: Loosen the bolt and move the ignition coil up and down for adjusting the clearance, then, screw down the bolt.

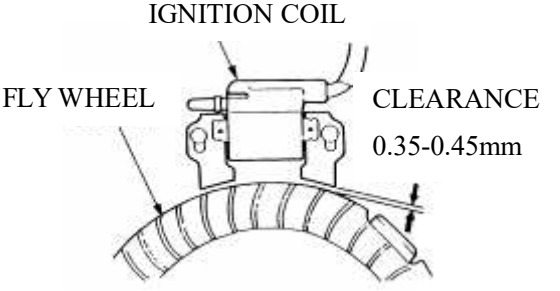

Check the ignition coil

（primary side）

Measure the resistance of the primary coil by attaching one ohmmeter lead to the ignition coil's primary terminal while touching the other tester lead to the iron core

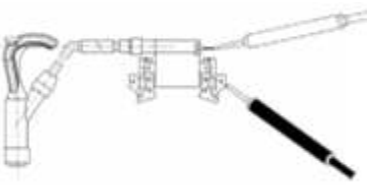

Primary side resistance value：1.1-1.3Ω

（Secondary side）

Measure the resistance of the secondary side of the coil with the spark plug cap removed, touching one test lead to the high tension cord while touching the other tester lead to the coil's iron core.

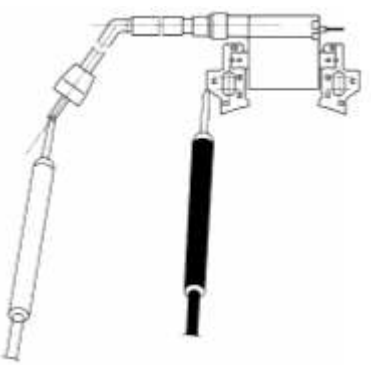

Secondary side resistance value：10.6-11kΩ

Spark plug cap

Measure the resistance of the spark plug cap by attaching one ohmmeter lead to the wire end of the plug cap while touching the other tester lead to the spark plug end.



Resistance value：4.5-5.5kΩ

4-4-8 Cylinder Head / Valve

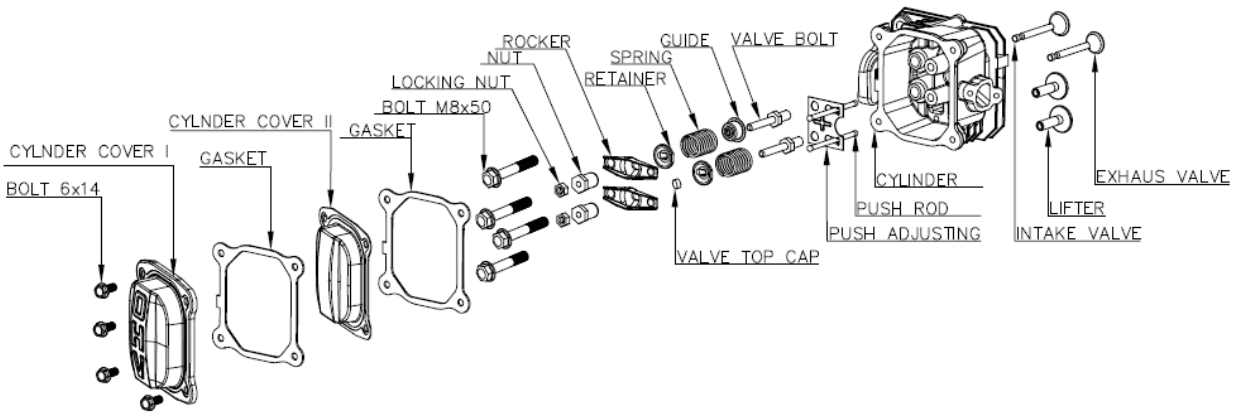

1) Removal / Installation

① Remove the muffler

② Remove the air cleaner

③ Remove the recoil starter and shroud

④ Remove the carburetor and insulator

CYLINDER HEAD

Installation ：

Before installation, remove any carbon deposits from the combustion chamber and inspect the valve seats. Measure the cylinder compression after reassembly.

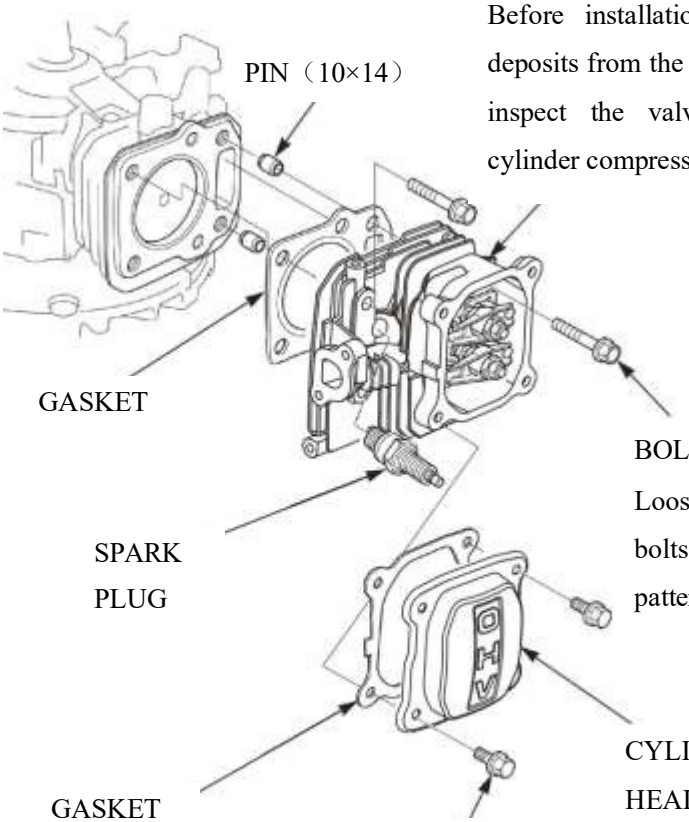

- Apply oil to thread
- Loosen and tighten the bolts in a crisscross pattern, especially tightening, uniformly and gradually tighten, finally to the specified torque.

Torque：8N.m

INTAKE VALVE
Reassembly:

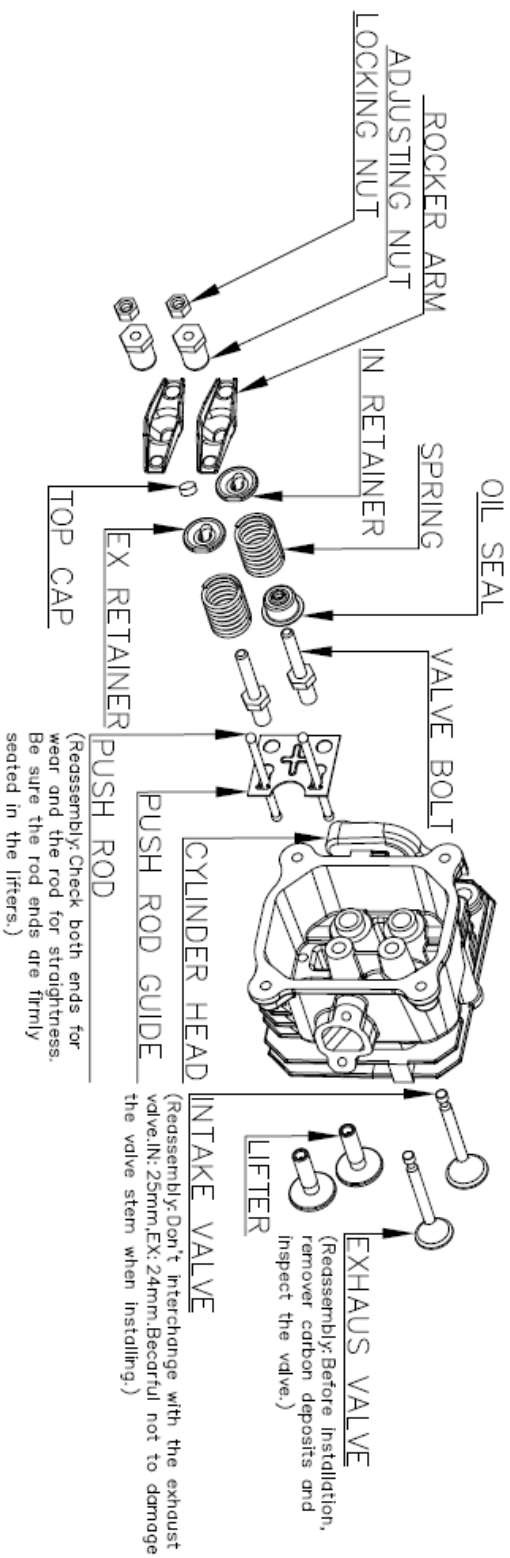

⑤ Install the head cover gasket aligning the projection of the head cover gasket with the projection of the cylinder head.

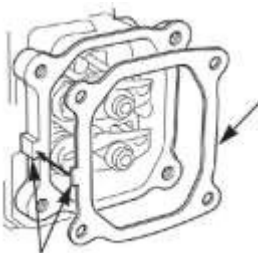

⑥ Valve spring retainer

Push down on the valve spring and move the retainer to the side so that valve stem slips through the side hole.
Do not remove the valve spring retainers while the cylinder head is attached to the cylinder, or the valves will drop into the cylinder.

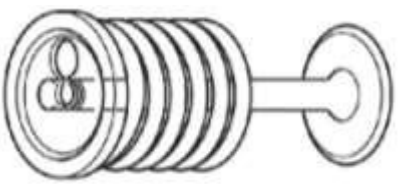

2) Inspect / service / repair：

① Valve stem outside diameter

Inspect the valve stem outside diameter with the micrometer, if finding out of the standard or service limit, or if visually inspecting the burn and damaged on the valve face, please replace with new one.



Standard		Service Limit	
IN：5.465-5.480mm	EX：5.465-5.480mm	IN：5.315mm	EX：5.315mm

② Valve spring free length

Measure the free length of the valve Springs. If out of the standard or service limit. Please replace the spring.



Standard	Service limit
33.5mm	32mm

③ Valve guide Inspect

:

a) Inspect the valve guide for smooth, scratch and damaged in the inner surface, and matching between the valve guide and cylinder cover for fastness.

b) Using the valve guide reamer, ream the valve guides to remove any carbon deposits before measuring.

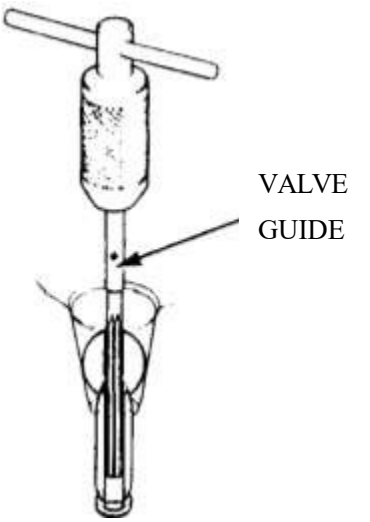

If the valve guide inside diameter is lower than standard or out of the service limit, replace the guide.

Standard	Service Limit
5.500-5.512mm	5.562mm

Replacement

a) Chill the replacement valve guides in the freezer section of a refrigerator for about an hour.

b) Drive the valve guide out of the combustion chamber side using valve guide driver.

NOTICE

Be careful to avoid damaging the cylinder head when driving out the valve guides.

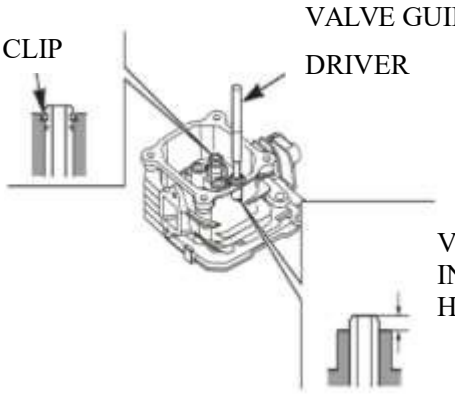

c) Install the new valve guides from the valve spring side of the cylinder head.

- Exhaust side: Drive the exhaust valve guide until the clip is fully seated (as shown as fig.).
- Intake side: Drive the intake valve guide to the specified height (measured from the top of the valve guide to the cylinder cover as shown as fig.).

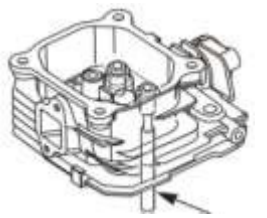
VALVE GUIDE DRIVER

d) After installation, inspect the valve guide for damage, if damaged, please replace.

Reamer

For best results, be sure the cylinder head is at room temperature before reaming valve guides.

a) Coat the reamer and valve guide with cutting oil.

b) Rotate the reamer clockwise through the valve guide for the full length of the reamer.

c) Continue to rotate the reamer clockwise while removing it from the valve guide.

Tools：Valve guide reamer

d) Thoroughly clean the cylinder head to remove any cutting residue.

e) Check the valve guide bore, it should be straight, round and centered in the valve guide, insert the valve and check operation. If the valve does not operate smoothly,

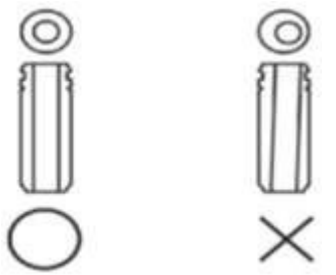
CORRECT INCORRECT

the guide may have been bent during installation. Replace the valve guide if it is bent or damaged.

f) Check the valve stem-to-guide clearance.

g) The valve stem-to-guide clearance：

The vale guide bore detract the valve stem outside diameter to get the clearance between the valve guide and valve stem.

h) If the clearance is over the service limit, judge a new guide if it can make the clearance Conforming to service limit, if conforming to replace the guide and ream the guide, refinish the valve when replacing the valve guide.

④ Valve seat

a) Thoroughly clean the combustion chambers and valve seats to remove carbon deposits. Apply a light coat of red lead powder or erasable color painting to the valve faces.

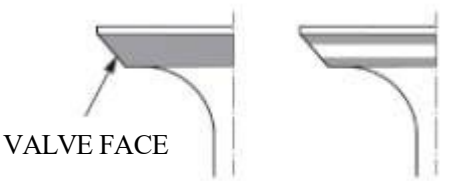

b) Insert the valves, and then press the valve Several times forcefully. Be sure the valve does not rotate on the seat. The transferred marking compound will show any area of the seat that is not concentric.

c) Using 45°cutter, remove enough material to produce a smooth and concentric seat. Turn cutter clockwise, never counterclockwise. Continue to turn the cutter as you lift it from the valve seat.

Tool

Valve seat cutter





IN.：32°

EX.：32°



IN.：45°

EX.：45°

Use the 32°-45°cutters to narrow and adjust the valve seat so that it contacts the middle of the valve face. The 32°cutter removes material from the top edge (contact too high).

d) The 45°cutter removes material from the bottom edge (contact too low). Be sure that the width of the finished valve seat is within specification.

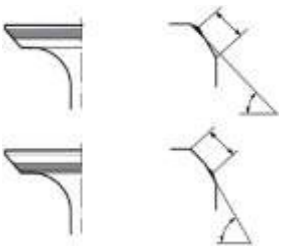

Standard	Service limit
0.8mm	2.0mm

e) Make alight pass with the 45°cutter to remove any possible burrs at the edges of the seat.

f) After resurfacing seat, inspect for even valve seating width. Apply colorant to the valve tapered face, insert the valve and press it forcefully several times, be sure the valve does not rotate on the seat. The seating surface, as shown by the transferred marking compound, should have good contact all the way around.

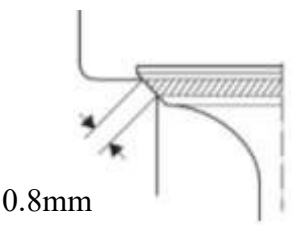

g) Apply the abradant to the valve seat face, suitable for running in when rotating valve seat with valve seat cutter.

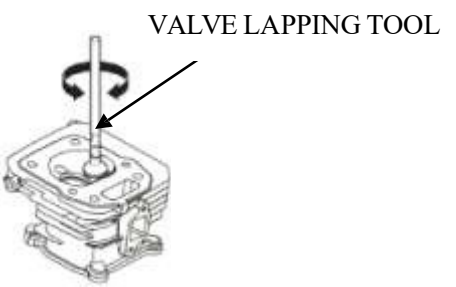

h) After reassembling, check the valve clearance.

4-4-9 Crankshaft / Piston

CRANKSHAFT

Reassembly：

Push in firmly until contact is made with the rearing surface. Be careful not to damage the oil seal.

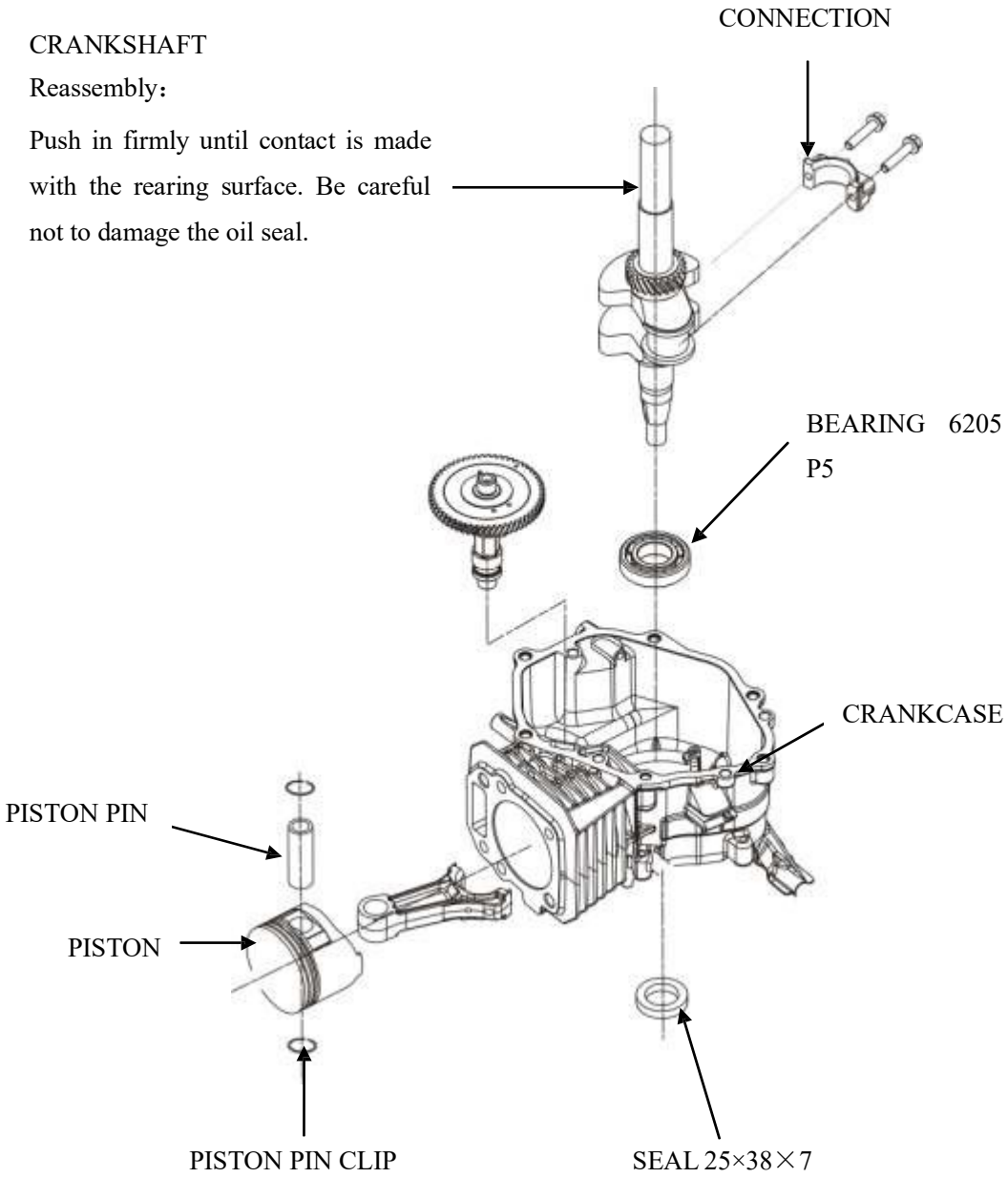

①Disassembly：

a) Piston

- Install with the maker mark facing upward as shown. Do not interchange the top ring and the second ring (top ring with chrome plated).
- After assembly, check for smooth movement of the piston ring.
- Stagger the piston ring end gaps 120° apart.

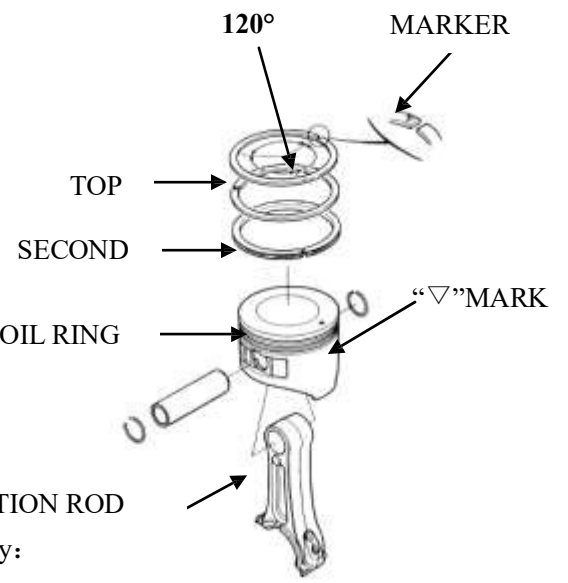

Reassembly：

Make sure that the longer end marked is toward the piston head with the "▽"

②Reassembly：

a) Piston pin clip

Install by setting front end of the clip in the piston groove, holding the other end with long nosed pliers, and rotating the clip in.

Do not align the end gap of the clip with the cutout in the piston pin bore.

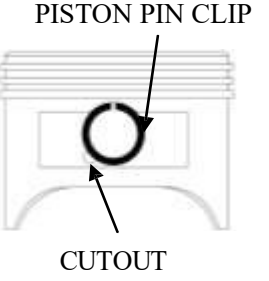

b) Connecting rod cap

Install by aligning the alignment marks on the connecting rod cap.

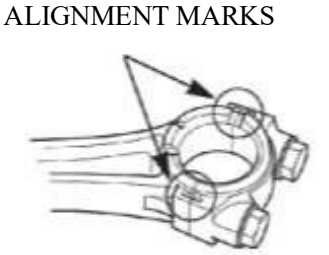

c) Bearing

- Apply oil to the circumference of a new ball bearing.
- Drive the ball bearing in the cylinder barrel using 6205 tool.

Tools：

Driver handle

Retainer assembler

Inner assembler

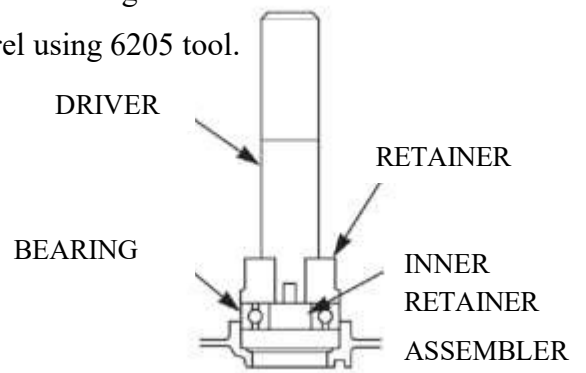

d) Oil seal：

- Apply oil to the circumference of a oil seal.
- Drive the oil seal in the cylinder barrel using following tool.

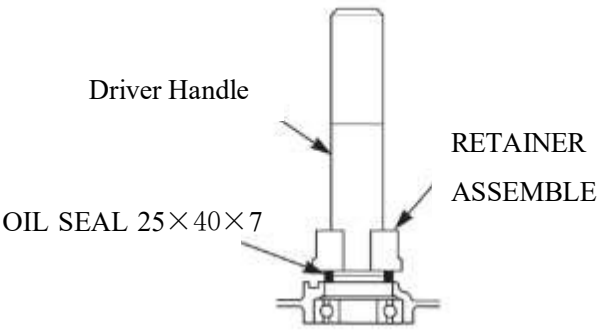

Tools：

Driver handle

Retainer assembler

- Apply the lubrication oil on, after reassembling.

e)Piston：

- Apply oil to the piston and cylinder.
- Install the piston with the mark on the piston head toward the push rod hole side.

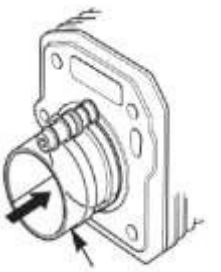

PISTON RING COMPRESSOR (COMMERCIALLY AVAILABLE)



③Piston check

Check the piston and cylinder for contacting, and check the groove for defects, piston top for burn and cracks. If damaged, replace.

Clean the carbon deposit

Clean the deposit round the piston top and cylinder neck before checking, first soak the carbon deposit with kerosene, and then clean with meter scraper or metal brush.

a) Piston skirt O.D

Measure the piston skirt O.D with outside micrometer, if out of the service limit, replace it.



Standard	Service Limit
69.985mm	69.845mm

b) Piston pin bore to piston clearance

Separately measure the piston pin bore I.D and O.D with inside micrometer and outside micrometer. Then calculate clearance by measuring results.

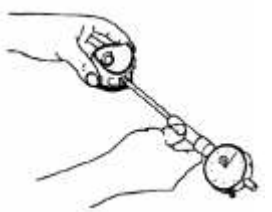



Standard	Service Limit
0.002-0.014mm	0.08mm

c) Piston-cylinder clearance

Difference between cylinder maximum diameter and piston skirt should be considered as piston-cylinder clearance.

NOTICE This clearance must be checked before and after repairing.

Check with piston converting in the cylinder, and inserting feeler between piston skirt bearing face and wall, then pull the feeler out, if feeling resistance and smoothly out, the thickness of the feeler shall be considered as piston-cylinder clearance.

Standard	Service Limit
0.015-0.050mm	0.12mm

d) Piston ring side clearance

Check with placing each ring into each-self groove. The piston ring should be freely turned without loosening and sticking.

Then measure with inserting feeler into clearance of the ring and upper and lower face.

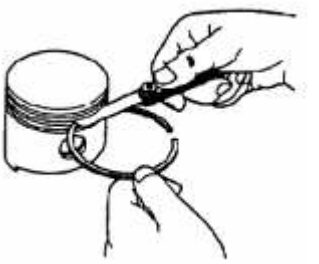

Standard	Service Limit
0.030-0.065mm	0.15mm

e) Piston ring end gap

Flatly place the piston into the cylinder with pushing the piston head to working position.

Measure the opening clearance with feeler, that clearance not too big or not to small, too big can result in cylinder sealing performance poor while too small can result in piston expanded from heating and blocked in the cylinder, thus causing piston broken and “sticking”. If opening clearance is too small, file the opening with fine flat file. Often check in the cylinder when filing until the proper clearance is got.

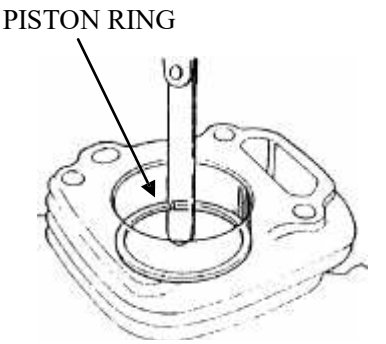

Standard	Service Limit
0.2-0.4mm	1.0mm

④Check connecting rod

If connecting rod bending, twisting or big end shaft bush and small end outer ring movement or crack on one side, should be rejected and replaced with new one.

a) Check small end diameter

If out of the standard or exceed service limit, replace the connecting rod.



Standard	Service Limit
18.004-18.012mm	18.052mm

b) Check big end diameter

If out of the standard or exceed service limit, replace the connecting rod.

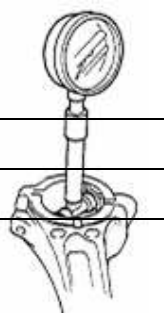

Standard	Service Limit
30.015-30.035mm	30.050mm

c) Connecting rod big end oil clearance

- Wipe oil off the crank pin and connecting rod bearing mating surface.
- Set the plastic gauge on the crank pin, connecting rod and bolt to specified torque.

Torque：15 Nm

NOTICE Place the plastic gauge axially.

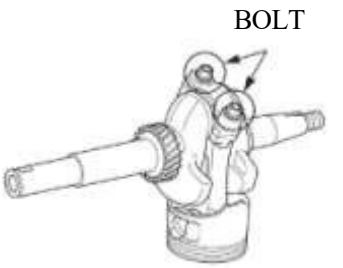

- Remove connecting rod and measure with plastic gauge.

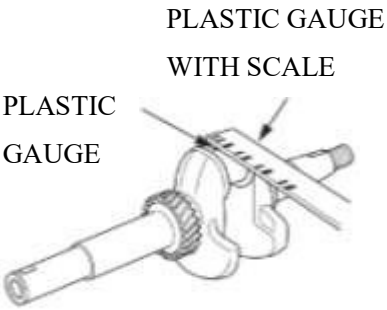

Standard	Service limit
0.040-0.063mm	0.12mm

- If the clearance exceeds the service limit, replace the connecting rod and recheck the clearance.

⑤Camshaft check

The camshaft is main driving part of the train valve mechanism, which control the intake and exhaust valves opening and closing.

Feature: The shaft is equipped with cam and journal which can control intake and exhaust. When operating, camshaft operating face and lifter will be badly rubbed from periodically impacting and easily be damaged. So, the camshaft shall be wearable and lubrication well.

- Visually inspect camshaft face and camshaft height for damaged, and camshaft and bearing for loosening and wearing, replace as required.
- Check camshaft for height dimension, if out of the service limit, replace the camshaft.

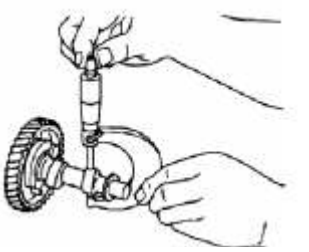

Standard	Service limit
27.70mm(IN)/27.75mm(EX)	27.45mm(IN)/27.50mm(EX)

- Check outside diameter of the camshaft, if less than the service limit, replace the camshaft.



Standard	Service limit
13.965-13.990mm	13.915mm

Camshaft wearing cause and to engine performance influence：

Poor lubrication will result in camshaft abnormal wearing, such as, oil viscosity low, impurity too much, and recycling oil little can’t let the camshaft surface forming complete oil film to make the camshaft surface seriously worn in the high speed rubbing stat. Second, installing precision problem, when the matching clearance of the camshaft journal and camshaft seat or bearing is out of the service limit, camshaft rotation precision will lower and contacting with the relative part produce deviation face to make abnormal wearing.

⑥Timing gear

a）Check timing gear for engagement clearance with aligning two side mark on the gear.

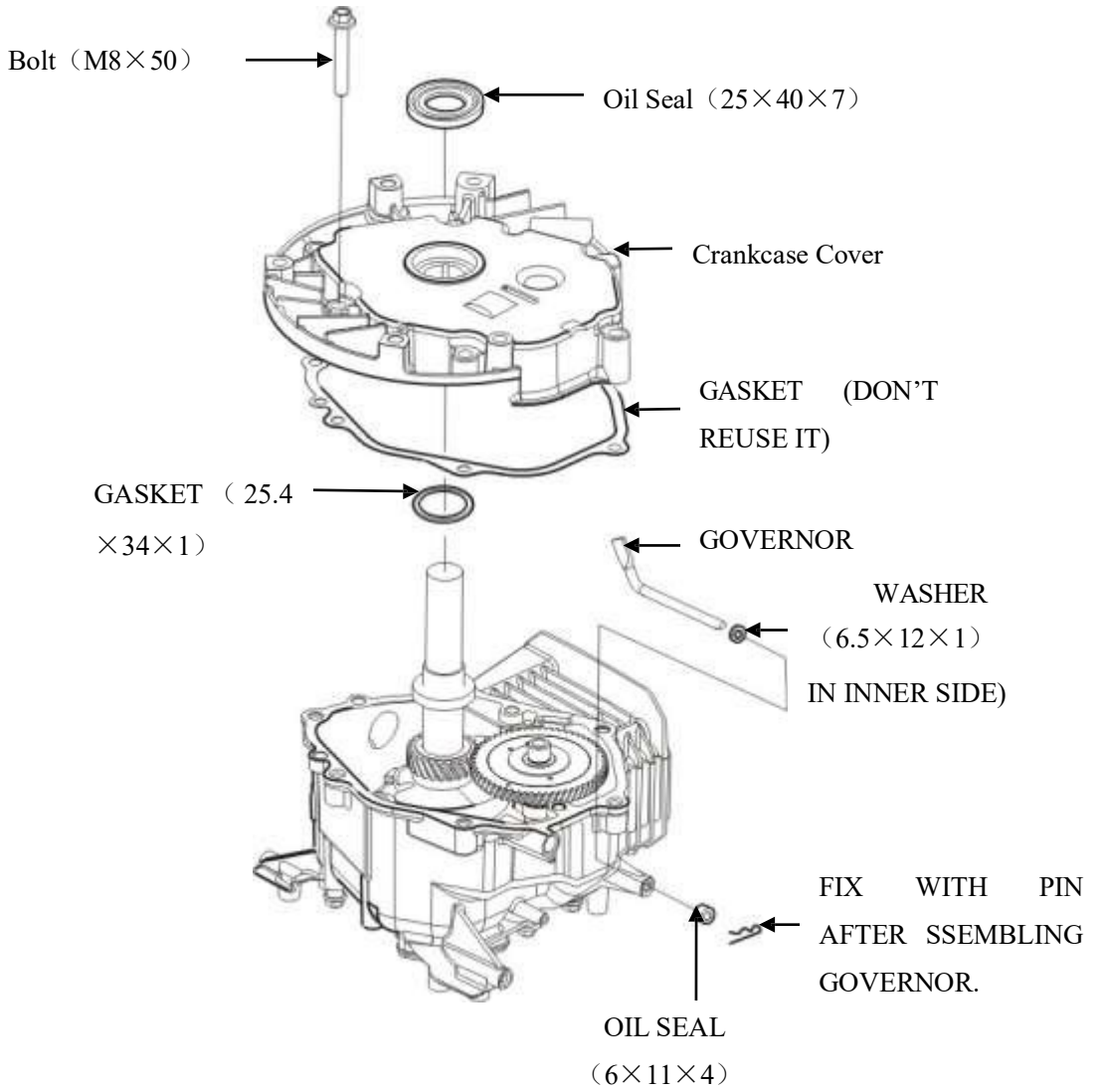

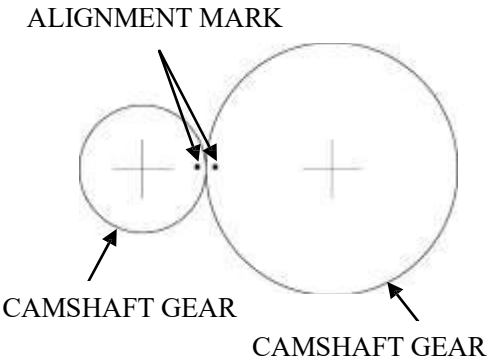

Timing gear will be damaged in gear worn, gear face peeling off, and gear teeth broken. The engagement clearance is bigger due to gear wearing, the noise is bigger.

If the timing gear is damaged, please replace with new one.

NOTICE Please replace the gear with a new set to ensure the engaging face completely engage in.

b) Reassembly：

Oil seal：

- Apply grease to new oil seal around.
- Install the oil seal into the crankcase cover with special tools.
- After installing, apply special grease to the oil seal.

RETAINER ASSEMBLER

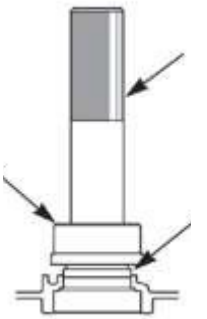

c) Check：

Camshaft handle inside diameter

Standard	Service limit
14.0-14.018mm	14.048mm

CRANKCASE COVER

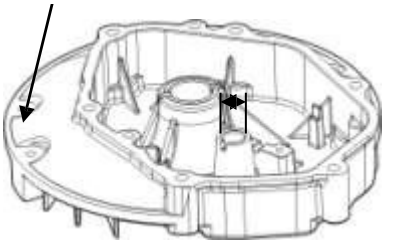

4-5 Electric Diagrams

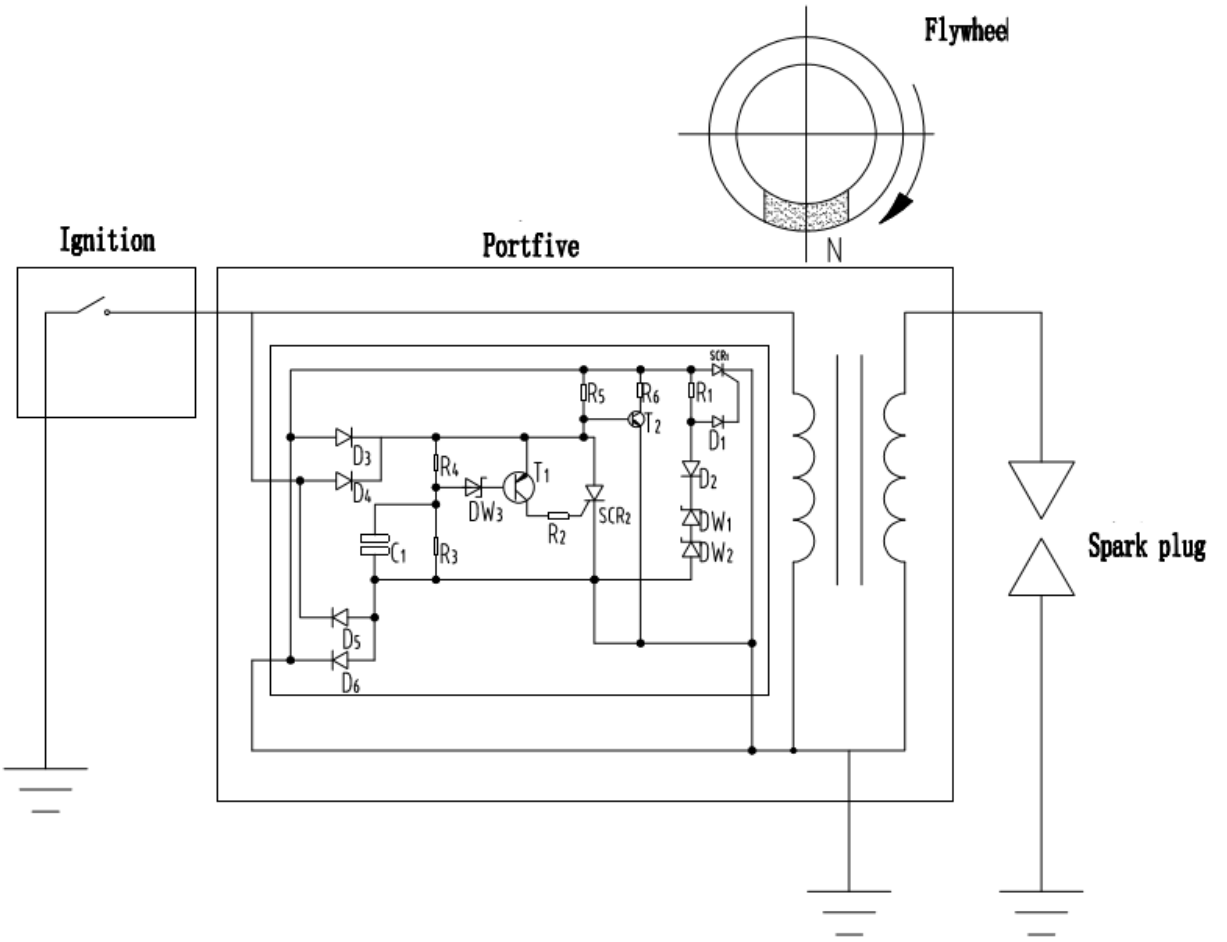

TRANSFORMATION POINTS

Engine Cover	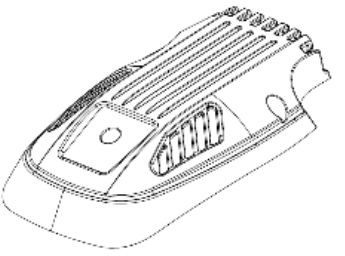	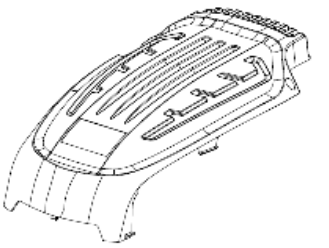
SHROUD	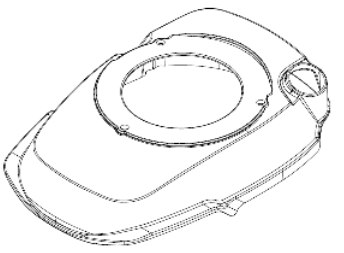	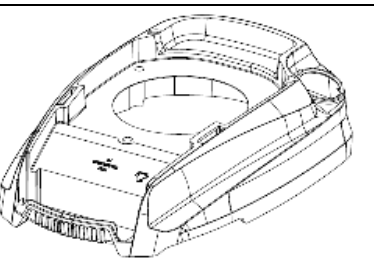
Recoil Starter		